TRAXXAS®

The Fastest Name In Radio Control®



PARTS CATALOG
10th Edition



ELECTRIC



RADIO& ELECTRONICS



BATTERIES& CHARGERS



PARTS& ACCESSORIES

PARTS • SPECIFICATIONS • SERVICE

CONTENTS

INTRO — White Tabs

Policies
Warranty and Forms
Power-Up

2WD ELECTRIC SLASH MODELS — Green Tabs

Slash 2WD Unassembled Kit (#58014-4)
Slash (#58024)
Slash Race Replica (#58034-1)
Slash Race Replica with On-Board Audio (#58034-2)
Slash VXL (#58076-4)
2017 Ford Raptor (#58094-1)

2WD ELECTRIC MODELS — Green Tabs

Bandit (#24054-1/24054-4)
Bandit VXL (#24076-4)
Stampede (#36054-1/36054-4)
Stampede VXL (#36076-4)
Rustler (#37054-1/37054-4)
Rustler VXL (#37076-4)
Bigfoot (#36084-1)/Bigfoot No.1 (#36034-1)

4WD ELECTRIC MODELS — Green Tabs

Fiesta ST Rally (#74054-4)
Stampede 4x4 Unassembled kit (#67014-4)
Stampede 4X4 (#67054-1)
Rustler 4x4 (#67064-1)
Rustler 4x4 VXL (#67076-4)
Stampede 4X4 VXL (#67086-4)
Slash 4x4 (#68054-1)
Slash 4X4 Ultimate (#68077-4)/Slash 4X4 Platinum (#6804R)
Slash 4X4 VXL (#68086-4)
Hoss 4x4 VXL (#90076-4)

1/16 ELECTRIC MODELS — Green Tabs

1/16 Slash 4X4 (#70054-1)
1/16 E-Revo (#71054-1)
1/16 E-Revo VXL (#71076-3)
1/16 Summit (#72054-3)

4WD ELECTRIC TRUCKS — Green Tabs

Summit (#56076-4)
X-Maxx (#77086-4)
Unlimited Desert Racer (#85086-4)
E-Revo (#86086-4)
Maxx (#89076-4)

AWD ELECTRIC ON-ROAD MODELS — Green Tabs

XO-1 (#64077-3)
4-Tec 2.0 (#83024-4)/ 4-Tec 2.0 VXL (#83076-4)
Ford Mustang GT (#83044-4)
Ford GT (#83056-4)

SCALE AND TRAIL CRAWLERS — Green Tabs

TRX-4 Sport Unassembled Kit (#82010-4)
TRX-4 Chassis Kit (#82016-4)
TRX-4 Sport (#82024-4)
TRX-4 Equipped with Traxx(#82034-4)
TRX-4 Bronco (#82046-4)
TRX-4 Land Rover Defender (#82056-4)
TRX-4 Blazer (#82076-4)
TRX-4 Mercedes-Benz G 500 (#82096-4)
TRX-6 Mercedes-Benz G 63 6x6 (#88096-4)

LATRAX MODELS — Yellow Tabs

LaTrax Alias (#6608)
LaTrax Rally (#75054-5)
LaTrax Desert Prerunner (#76064-5)
LaTrax Teton (#76054-5)

APPENDIX I — White Tabs

Radio Systems and Electronics
Batteries & Chargers

CONTACT INFORMATION

Traxxas Phone and Fax Numbers
Toll free: 1-888-TRAXXAS (872-9927)
Phone: 972-549-3000
Fax: 972-549-3011
Traxxas.com

Hours of Operation: 8:30am - 9:00pm Central Time

ask for a dealer service representative.

Shipping and Mailing Address
Traxxas
6250 Traxxas Way
McKinney, TX 75070

INFORMATION

- Batteries and battery chargers may or may not be included depending upon the model. Fuel, tools and other accessories may need to be purchased.
- Some models in this catalog may be photographed with optional equipment.
- The term “Radio” consists of a transmitter, receiver, and two or three servos (or one or two servos and an electronic speed control).
- Traxxas is continually updating and improving our products. Specifications and pricing in this catalog are subject to change without notice.
- Every attempt has been made to ensure the accuracy of the information presented in this catalog; however, Traxxas cannot be held responsible for typographical or other errors.
- Traxxas models are not intended for use on actual public streets, avenues or roadways.
- Some models may not be appropriate for children. Contact Traxxas if you have questions regarding age and application.

4-Tec,® Aton, ® Bandit,® E-Maxx,® E-Revo,® EZ-Peak,® EZ-Start,® Fastest Name In Radio Control,® From Start to Finish,® ID,® Jato,® Maxx, ® LaTrax,® Maxx,® OptiDrive,® ProGraphix,® Revo,® Ready-To-Drive,® Ready-To-Race,® Rustler,® R.T.S,® Scale and Trail,® Stampede,® Slayer,® T-Maxx,® Teton, ® Titan,® Traxxas,® TRX, ® TRX-4,® TSM,® Twist Lock,® Unlimted Desert Racer, ® Velineon,® WideMaxx,® X-Maxx,® are all registered trademarks of Traxxas. A Monster for the Track,™ Alias,™ Anaconda,™ Blast,™ Desert Prerunner,™ EVX,™ EVX Marine,™ Gemini,™ Genuine Traxxas,™ GTR Shocks,™ Hoss,™ Lifetime Engine Replacement Plan,™ Magnum 272,™ Magnum 281,™ Magnum 375,™ Muscletruck,™ Nautica,™ Nitro 4-Tec,™ Nitro Sport,™ Nitro Vee,™ Pro-Scale,™ Response,™ Slash,™ Split-Spoke,™ SportTraxx,™ Stinger,™ Summit,™ Talon,™ Torque-Control,™ Traxxas Link,™ Traxxas Tough,™ Twin-Spoke,™ TQi,™ TQ,™ TQ-3,™ Victory,™ Villain,™ WideMaxx,™ Ultra Shocks,™ XL-1,™ XL-5,™ XL-10,™ XL-10 Marine,™ are all trademarks of Traxxas. BFGoodrich® Mud Terrain™ T/A® tires are trademarks of BFGoodrich® Tires. Road Venture MT tires are trademarks of Kumho Tires. Ford Motor Company Trademarks and Trade Dress used under license to Traxxas. BIGFOOT® and The Original Monster Truck® are registered trademarks of BIGFOOT 4x4, Inc. FIRESTONE and the FIRESTONE logo are trademarks of Bridgestone Brands, LLC and Bridgestone Licensing Services, Inc. © 2020 BIGFOOT 4X4, Inc., 2286 Rose Lane, Pacific, MO 63069 USA Bigfoot4x4.com. All Rights Reserved. This dealer catalog and contents are all © Traxxas 2020. No part may be legally reproduced without prior written consent from Traxxas.

POLICIES

DEFECTIVE MERCHANDISE POLICY:

These warranty and service policies supercede policies prior to January 2014. Traxxas assumes responsibility for its products and will repair or replace any defective product at its sole discretion. Traxxas does not support dealer-generated replacements. In addition, we believe that we alone are responsible for our products; therefore, distributors should not be involved in any product replacements for defective merchandise.

Please contact Traxxas directly should a problem arise with one of our products. Customer and dealer service hours are from 8:30am to 9:00pm Central U.S. time. Customer service can be contacted toll-free at 1-888-TRAXXAS (872-9927), and outside the United States at 972-549-3000. E-mail support is available 24 hours a day at support@Traxxas.com.

GENERAL PRODUCT WARRANTY:

Electronic Components

Traxxas electronic components are warranted to be free from defects in materials and workmanship for a period of thirty (30) days from the date of purchase. Electronic components consist of the radio system (transmitter, receiver, servos, switches, and receiver battery holders), and any other Traxxas electronic component. See the additional limitations that apply.

Chassis and Engine

The chassis consists of all remaining parts of the model that are not considered electronic or part of the engine. This includes recoil starters, the EZ-Start system and controller, starter components, and the glow plug.

A Traxxas product is considered a race-oriented, hobby-class model. We have made every effort in component design, material selection, and assembly to make our products as durable as possible. Because our products are high-performance, hobby-class models that operate at a much higher level of performance than a "toy," they require periodic maintenance, and are intended to be used in high-performance applications over an extremely wide range of running conditions and situations. **No warranties are expressed or implied that cover damage caused by normal use or wear, or cover or imply how long any chassis or engine part will last before requiring replacement due to wear. Even under the most ideal conditions, parts will wear from use and occasionally require replacement. Engines and chassis are only covered against manufacturer's defects in materials, workmanship or assembly when they are new (before being used).**

If any component is found to be defective, incorrectly made, or incorrectly assembled within the warranty coverage time period (where applicable), it will be repaired or replaced at Traxxas' sole discretion. This will be done within a reasonable time period and free of charge. If you believe a defect in materials, workmanship, or assembly was not apparent when the product was new and only became evident after the product was used, then please call us at 1-888-TRAXXAS. We stand behind our products and reputation, and pledge to do our best to make sure you are satisfied with your Traxxas product.

Limitations

Any and all warranty coverage does not cover replacement of parts and components damaged by abuse, neglect, improper or unreasonable use, crash damage, water or excessive moisture, chemical damage, improper or infrequent maintenance, accident, unauthorized alteration or modification, use of improper fuels, or items that are considered consumable. Traxxas will not pay for the cost of shipping or transportation of a defective component to us.

Hobby Dealers' Role

All warranty claims are handled directly by Traxxas. Dealers can assist by contacting Traxxas and determining which components might be defective, but are under no obligation to provide free replacement parts or service. **Traxxas does not authorize dealers to make over-the-counter exchanges or refunds for Traxxas products that have been used.** Traxxas will make the sole and final determination if a product or component can be covered under warranty.

Limitations of Liability

Traxxas makes no other warranties expressed or implied. Traxxas shall not be liable for any special, indirect, incidental, or consequential damages arising out of the assembly, installation, or use of their products or any accessory or chemical required to use their products. By the act of operating/using the product, the user accepts all resulting liability. In no case shall Traxxas' liability exceed the actual purchase price paid for the product. Traxxas reserves the right to modify warranty provisions without notice. All warranty claims will be handled directly by Traxxas. The Traxxas warranty gives the customer specific legal rights and possibly other rights that vary from state to state. All dollar amounts stated are in United States dollars. The term "lifetime" shall refer to the product's production life at Traxxas. Traxxas is not obligated to provide upgraded products at a reduced rate when a previous product's production cycle has ended. ***Traxxas encourages the customer to register their model online at Traxxas.com/register.***

Specific Limitations

The Traxxas warranty does not cover damage to electronic components caused by:

- Allowing water, moisture, or other foreign material to enter the non-waterproof component or get onto the PC board
- Exceeding the maximum input voltage of the electronic component
- Removing the stock Traxxas High Current Connector(s)
- Using the same type and (or) gender connectors on a speed control's motor and battery connections
- Cross connection of the battery/motor
- Reverse voltage application
- Exceeding the published motor limits for electronic speed controls.
- On the EVX, using a motor with fewer than 19 turns, or using a motor other than a 550 size
- Incorrect installation or wiring
- Components worn from use
- Short-circuiting the heat sinks on electronic speed controls
- Using an electronic speed control without the heat sinks
- Removing the noise filter capacitors from the stock motors
- Not installing capacitors on replacement motors (Recommended three .1µF [50V] each)
- Splices to the input or switch harnesses
- Disassembling the case
- Excessive force when adjusting, pressing, or turning any of the controls
- Tampering with the internal electronics
- Incorrect wiring of an FET servo
- Allowing exposed wiring to short circuit
- Any damage caused by crash, flooding, or act of God

NON-WARRANTY SERVICE

Traxxas offers an extended electronics warranty plan. It requires no payment up front. You only pay when you need the service.

Traxxas Lifetime Electronics Warranty:

After the expiration date of the warranty period, Traxxas will repair electronic components for a flat rate. The electronic products covered by this extended service plan include electronic speed controls, transmitters, receivers, servos, and battery chargers. Motors and mechanical speed controls are not covered. Other mechanical repairs will be estimated separately. The covered repairs are limited to non-mechanical components that have NOT been subjected to abuse, misuse, or neglect. Products damaged by intentional abuse, misuse, or neglect may be subject to additional charges.

Electronic speed controls that have been damaged by intentional abuse, misuse, or neglect may be subject to charges in addition to the warranty charge. The maximum additional charge will be automatically assessed when an ESC has been rewired with non-Traxxas connectors. The Traxxas connectors must be in place in order to connect the speed controls to factory test equipment (see Traxxas Lifetime Electronics Warranty for a fee breakdown). Traxxas liability, in no case, shall be greater than the actual purchase price of this product.

Return Procedure:
The electronic component being returned for repair should be removed from the vehicle and returned to Traxxas, along with:

1. Full payment in the form of a credit card number (MasterCard, Visa or Discover) or money order (including shipping and handling).
2. Completed Lifetime Electronics Warranty form.

Do not send the entire model, only the damaged component. Remove all batteries. The package shipped to Traxxas should be insured to cover the value of a new replacement. Traxxas cannot be responsible for items lost in transit to Traxxas. Follow the guidelines in the "Preparing Merchandise for Shipment" section below.

International Customers:
International orders must be paid by credit card (MasterCard, Visa or Discover). Actual shipping charges will apply and are usually higher than $5.00 U.S. If you want to approve the shipping charges prior to your product being returned, then please supply a valid e-mail address and request approval of actual shipping charges on the Lifetime Electronics Warranty form.

How to Obtain Warranty and Repair Service
Call us first! Before you begin the process of obtaining warranty or repair service, please call us at 1-888-TRAXXAS and speak with one of our friendly and knowledgeable support technicians. Often a product might appear defective, or to malfunction, only because it is being used improperly or requires a simple adjustment. One phone call to our experienced support staff just might get you back running quickly and easily!

When you return a product to Traxxas, please provide the following:

- Proof of purchase indicating the date purchased
- Any applicable forms
- Return address
- Daytime and evening phone numbers
- E-mail address
- Brief description of the problem

Follow the guidelines in the "Preparing Merchandise for Shipment" section below and return the item to Traxxas. If the component is found to be defective, it will be repaired or replaced at no charge and returned. Any needed repairs that are not covered under warranty will be estimated on an individual basis, prior to any work being done.

PREPARING MERCHANDISE FOR SHIPMENT

Following these guidelines will help you save on shipping costs and assist our service department in expediting your repair.

- **DO NOT SEND** fuel, batteries, chargers, glow plug igniters, instruction manuals, bodies, or any other accessories you use to run your model. This will save shipping cost and prevent the possibility of those items becoming lost. Traxxas shall not be liable for accessory items lost during the repair process.
- Remove all batteries from the model, including NiCad packs, NiMH packs, LiPo packs, and AA batteries.
- If the transmitter is being returned, remove the "AA" batteries.
- Clean the model before returning it to avoid additional cleaning fees.
- If your model is equipped with Traxxas or aftermarket accessories and has a replacement value higher than a stock new model, consider removing the accessories prior to shipment. In case of loss during transit from Traxxas to you, Traxxas can only be responsible for the replacement cost of a new stock model.
- Reassemble undamaged components to avoid additional repair charges.
- Ship your package insured for the new replacement value of the product. Traxxas cannot be responsible for items lost in transit from you to Traxxas.
- Package the product in the most efficient size box possible. Loose product in oversized boxes can increase the risk of loss or additional damage en route to Traxxas.
- If possible, avoid the use of foam packing peanuts. If peanuts must be used, please place the item to be repaired in a sealed bag.
- **Include all the documentation and forms required to repair the model,** along with a brief description of the problem
- **Include a daytime and evening phone number or e-mail address** that the service department may use to contact you with questions or estimates regarding the repair.
- **Include a return shipping address**. It is surprising how often this is overlooked. We must have a physical address in order to return your product. It must be a street address. We cannot ship to Post Office boxes.

Ship items, freight prepaid to:
Traxxas
ATTN: Service Department
6250 Traxxas Way
McKinney, TX 75070

ADDITIONAL NON-WARRANTY CHARGES

Additional charges can result from the following:

The product being returned for warranty service should be cleaned of excess dirt and grime accumulations that would hinder repair. Excessively dirty models with large amounts of caked-on mud and oily grime may be subject to an additional cleaning charge of $25.00(USD) before repairs can proceed. Avoid this potential charge by cleaning the model before returning it for service.

"Basket cases" of disassembled models returned for warranty service may be subject to additional fees for reassembling components not related to the warranty repair, if necessary to allow the repaired product to be adequately tested. Standard repair fees are currently $45.00(USD)/hour, billed in 15-minute increments with a one-hour minimum. To avoid this charge, do not disassemble the model before returning it for service

Rechargeable Batteries:
Traxxas-supplied rechargeable batteries are warranted against manufacturer's defects in materials, workmanship, and assembly when new. There is no warranty expressed or implied that covers damage caused by normal use, or covers or implies how long the battery pack will run (run time) or last before requiring replacement due to normal use and normal cell degradation.

Traxxas shall not be liable for any damage caused by overcharging, battery failure, improper charging or discharging, use of non-approved chargers, use of non-approved batteries, and alterations or modifications of any kind to the charger, batteries, switches, or wiring.

Traxxas will replace any defective Traxxas LiPo battery at our discretion with no cost to you within the first year of purchase. The second year and beyond, we will exchange your Traxxas battery for a new one of the same or similar specifications at a 50% discount from our retail price. This program does not cover normal usage, modifications, water or crash damage, misuse or abuse. Contact Traxxas Customer Service for further details.

This product is warranted against defects in original material and workmanship only. No term warranty is offered with this product.

WARRANTY REGISTRATION

In order to serve you better as our customer, please register your product online at Traxxas.com, or if you do not have internet access, fill out and return this warranty registration card within 10 days of your purchase.

Traxxas Lifetime Electronics Warranty

Call us first! Before you begin the process of obtaining warranty or repair service, please call us at 1-888-TRAXXAS and speak with one of our friendly and knowledgeable support technicians. Often a product might appear defective, or to malfunction, only because it is being used improperly or requires a simple adjustment. One phone call to our experienced support staff just might get you back running quickly and easily! After the expiration date of the warranty period, Traxxas will repair electronic components at a fixed rate (see chart below) plus $5.00 U.S. for shipping and handling. The electronic products covered by this extended service plan include electronic speed controls, transmitters, receivers, servos, and battery chargers. Brushed motors and mechanical speed controls are not covered. Other mechanical repairs will be estimated separately. The covered repairs are limited to non-mechanical components that have NOT been subjected to abuse, misuse, or neglect. Products damaged by intentional abuse, misuse, or neglect, may be subject to additional charges.

Power Systems	Warranty Charge	Shipping/Handling (domestic)	Total Charges
Mamba Monster Extreme ESC (XO-1)	$120.00	$5.00	**$125.00**
Traxxas Big Block Motor (XO-1)	$125.00	$5.00	**$130.00**
#3010X - Nautica Waterproof ESC	$15.00	$5.00	**$20.00**
#3016 - XL-10 ESC	$30.00	$5.00	**$35.00**
#3018, 3018R, 3018X - XL-5 ESC	$20.00	$5.00	**$25.00**
#3019, 3019R - EVX-2 ESC	$45.00	$5.00	**$50.00**
#3020 - EVX-2 Marine ESC	$45.00	$5.00	**$50.00**
#3024, 3024R - XL-2.5 ESC	$20.00	$5.00	**$25.00**
#3025 - XL-5 HV Waterproof ESC	$25.00	$5.00	**$30.00**
#3351R - VXL 3500 Motor	$40.00	$5.00	**$45.00**
#3355R - VXL-3s Waterproof ESC	$50.00	$5.00	**$55.00**
#3371 - VXL 380 Motor	$40.00	$5.00	**$45.00**
#3375 - VXL-3m Waterproof ESC	$40.00	$5.00	**$45.00**
#3381X - Velineon 540XL Marine Motor	$70.00	$5.00	**$75.00**
#3385X - VXL-6s Marine ESC	$80.00	$5.00	**$85.00**
#3461 - Velineon 540XL Motor, 2400Kv	$55.00	$5.00	**$60.00**
#3465 - VXL-4s Waterproof ESC	$60.00	$5.00	**$65.00**
#3481 - 2200Kv Motor	$65.00	$5.00	**$70.00**
#3485 - VXL-6s Waterproof ESC	$70.00	$5.00	**$75.00**
#3491 - Velineon 1200XL Motor	$110.00	$5.00	**$115.00**
#3496 - VXL-8s Waterproof ESC	$110.00	$5.00	**$115.00**
#6590 - High-Voltage Power Amplifier	$20.00	$5.00	**$25.00**

Radio Systems	Warranty Charge	Shipping/Handling (domestic)	Total Charges
TQ Transmitters	$25.00	$5.00	**$30.00**
#6516, 6517 - TQ 2.4GHz Transmitter	$20.00	$5.00	**$25.00**
#6518, 6533 - TQi Receiver	$20.00	$5.00	**$25.00**
#6519 - TQ Receiver	$15.00	$5.00	**$20.00**
#6528, 6529, 6530 - TQi Transmitters	$40.00	$5.00	**$45.00**
#6553X - Telemetry Expander & GPS Module 2.0	$45.00	$5.00	**$50.00**
#6550X - Telemetry Expander 2.0	$15.00	$5.00	**$20.00**
#6551X - Telemetry GPS Module 2.0	$30.00	$5.00	**$35.00**
#6511 - Traxxas Link™ Wireless Module	$15.00	$5.00	**$20.00**
#2260 - BEC assembly	$15.00	$5.00	**$20.00**
#2262 - BEC, complete w/receiver box & seals	$15.00	$5.00	**$20.00**

Servos	Warranty Charge	Shipping/Handling (domestic)	Total Charges
#2085X - X-Maxx Metal Gear Waterproof Servo	$40.00	$5.00	**$45.00**
#2085 - X-Maxx Waterproof Servo	$35.00	$5.00	**$40.00**
#2090 - Maxx Waterproof Servo	$30.00	$5.00	**$35.00**
#2255 - 400 High-Torque Brushless Servo	$50.00	$5.00	**$55.00**
#2250 - 330 High-Torque Coreless Servo	$40.00	$5.00	**$45.00**
#2065X, 2075R, 2075X, 2080X Metal Gear Servos	$20.00	$5.00	**$25.00**
All other servos	$15.00	$5.00	**$20.00**

Form ESP KC1681 Rev 200924

Note:

Prices and part numbers are subject to change without notice. Contact Traxxas Technical Support for warranty details and charges on electronic parts not listed.

Go to Traxxas.com/support for the latest information.

*International Orders:

International orders must be paid by credit card (MasterCard, Visa, American Express or Discover). Outside of the continental U.S., shipping charges are higher. Call or fax us for an estimate of the shipping charges to be returned to you via e-mail (e-mail address required). For faster service, you may authorize Traxxas to add freight charges to your order without approval.

*All prices are U.S. dollars. Terms and conditions subject to change.

Return Procedure:

The electronic component being returned for repair should be removed from the vehicle and returned to Traxxas, with full payment in the form of a credit card number (Visa, MasterCard, Discover or American Express) or money order (including shipping and handling).

Do not send the entire model, only the damaged component. Remove all batteries. The package shipped to Traxxas should be insured to cover the value of a new replacement.

Traxxas cannot be responsible for items lost in transit to Traxxas.

Traxxas
6250 Traxxas Way
McKinney, TX 75070
Phone: 972-549-3000,
Toll Free in the U.S.: 1-888-TRAXXAS
Fax: 972-549-3011
E-mail: support@Traxxas.com

TRAXXAS Power-UP

TRADE UP TO EXTREME POWER



SAVE WITH SPECIAL POWER-UP PROGRAM PRICING!*

EXTREME BRUSHLESS HORSEPOWER!

Velineon EXTREME BRUSHLESS POWER SYSTEM



$100.00 POWER-UP PRICE



$125.00 POWER-UP PRICE



$165.00 POWER-UP PRICE



EXTREME NITRO PERFORMANCE!

TRX 3.3 RACING ENGINE

$110.00 POWER-UP PRICE

2.4GHz CLARITY & CONTROL!



TQ TOP QUALIFIER Radio System

TSM TRAXXAS STABILITY MANAGEMENT

AS LOW AS $67.50 POWER-UP PRICE

US customers only. Prices subject to change. Ask your dealer for details.

*Power-Up Program prices are offered with qualified trade-in item(s). See participating dealer or Traxxas.com for details.

Slash · Slash Race Replica · Slash VXL · Ford Raptor



SLASH PERFORMANCE & STYLE

READY-TO-RACE®

The Slash Radio Controlled Short-Course Race Truck puts you in the driver's seat to experience your own world of fun, off-road racing action at the track or in your own backyard. It's purpose-built to fly over jumps and rip full-throttle through the turns. The 4-Wheel independent suspension has been carefully tuned to replicate the full-scale driving and handling experience as closely as possible. Slash is fully assembled and Ready-To-Race®. Only from Traxxas, The Fastest Name In Radio Control.

TRAXXAS®
The Fastest Name In Radio Control®

SLASH

UNASSEMBLED KIT

MODEL 58014-4

ELECTRIC POWERED
SHORT COURSE RACING TRUCK KIT



30+ mph

BRUSHLESS READY METAL GEAR MAGNUM 272™ TRANSMISSION

WATERPROOF XL-5 ESC AND TITAN 12T MOTOR

TQ 2.4GHz 2-CHANNEL TRANSMITTER

AWARD WINNING SHORT-COURSE PERFORMANCE & FUN!

The Slash Assembly Kit adds a fun and exciting dynamic to your RC experience. Build your Slash from the ground up with all the required parts and electronics included in the box. Battery and charger sold separately. You'll get the convenience of a TQ™ 2.4GHz radio system, powerful Titan® electric motor, and waterproof XL-5 electronic speed control. All the parts are organized neatly in labeled bags with a fully illustrated color manual to make building rewarding and fun. The Slash assembly kit is perfect for drivers of almost any age or skill level. Build one yourself and experience RC fun the Traxxas way—fast, fun, and easy to use!

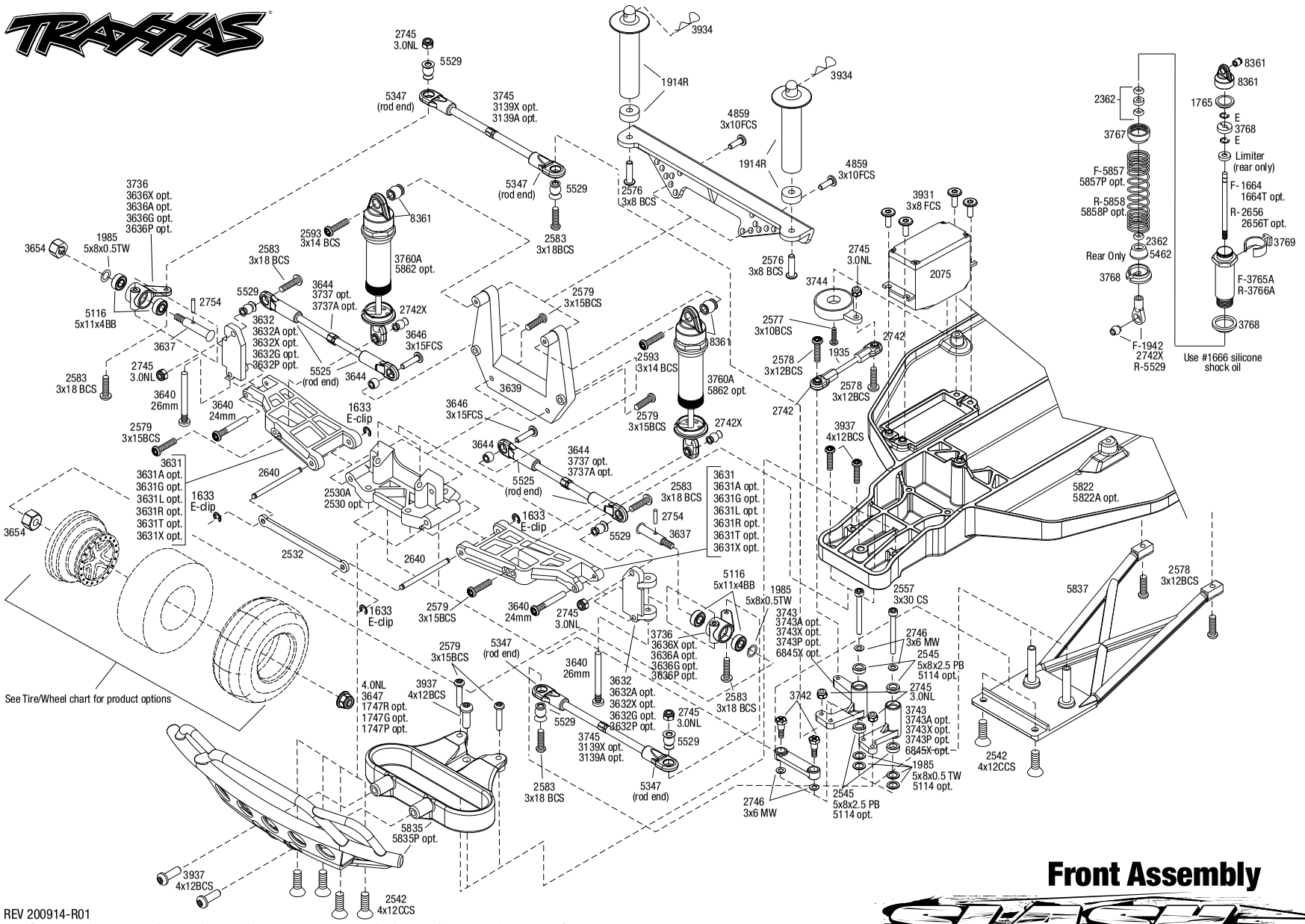

Front Assembly

REV 200914-R01

Specifications on this page are subject to change without notice. Every attempt has been made to ensure the accuracy of this drawing; however, Traxxas cannot be held responsible for typographical or other errors.

See Parts List for a complete listing of optional accessories.

SLASH KIT™ (58014-4)

EXPLODED VIEWS

Chassis Assembly

See Parts List for a complete listing of optional accessories.

Questions? **Call toll-free, 1-888-TRAXXAS**

REV 200914-R01

Specifications on this page are subject to change without notice. Every attempt has been made to ensure the accuracy of this drawing; however, Traxxas cannot be held responsible for typographical or other errors.

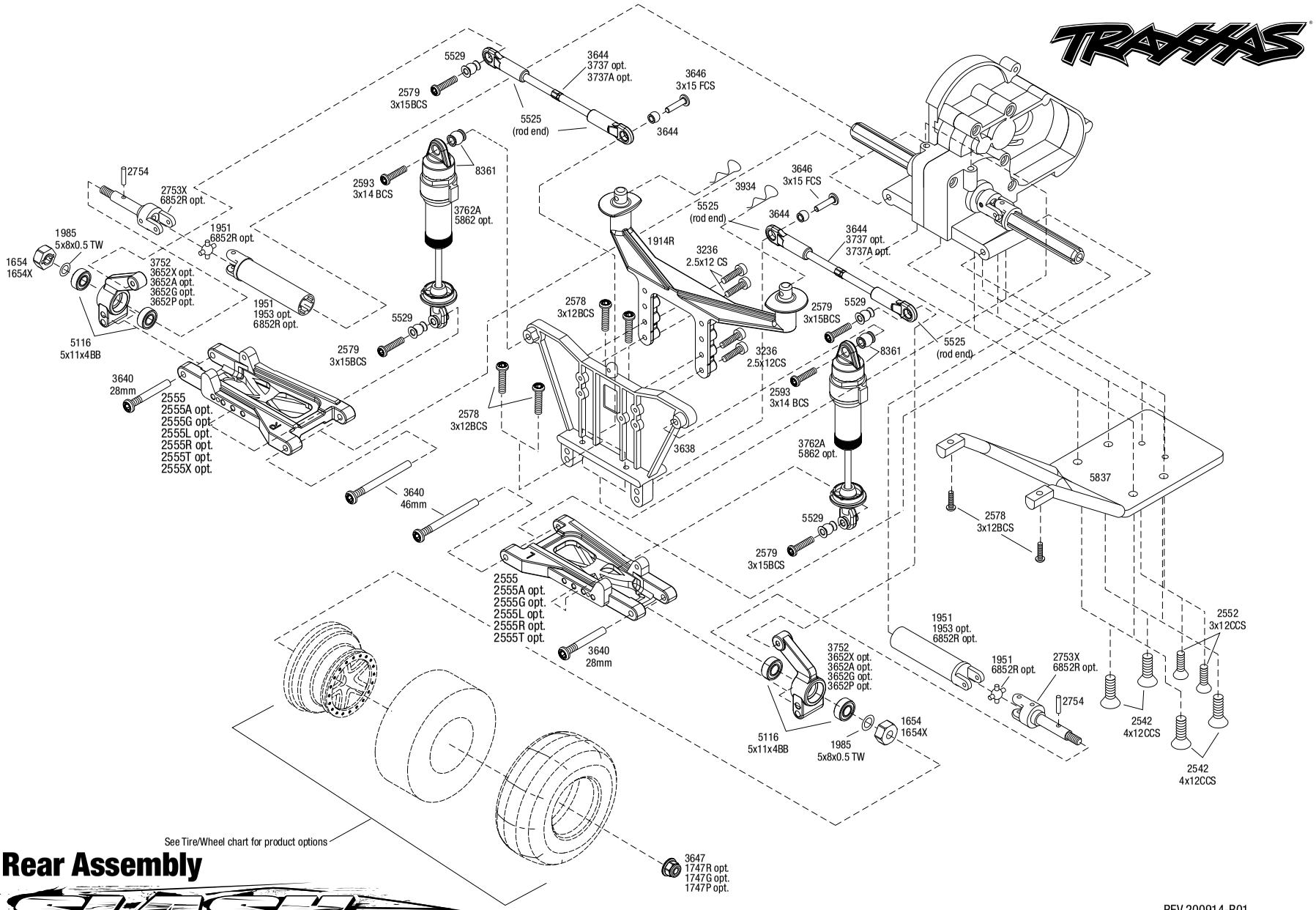

Rear Assembly

SLASH

See Parts List for a complete listing of optional accessories.

REV 200914-R01

Specifications on this page are subject to change without notice. Every attempt has been made to ensure the accuracy of this drawing; however, Traxxas cannot be held responsible for typographical or other errors.

Questions? Call toll-free, 1-888-TRAXXAS

SLASH

Transmission Assembly

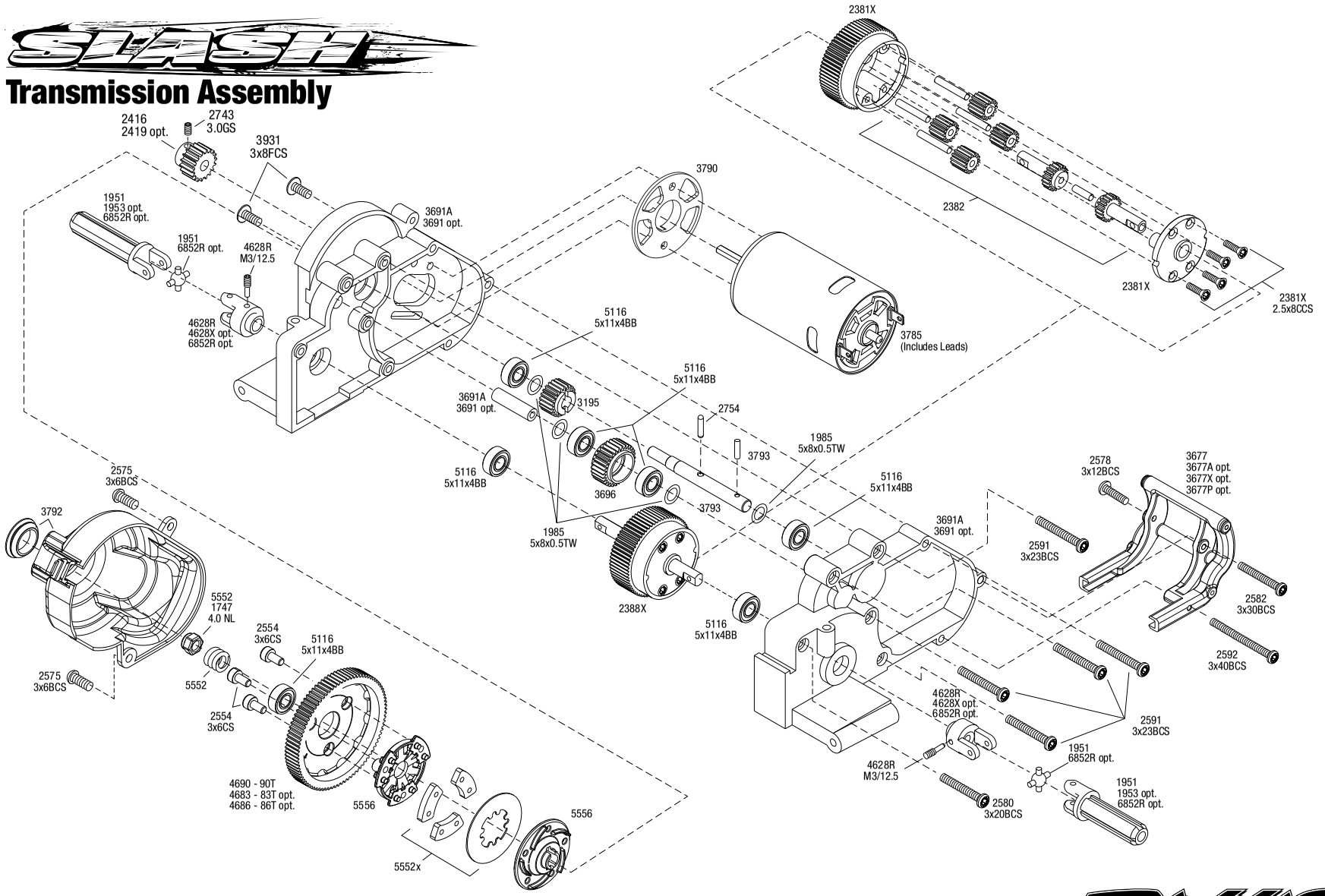

REV 200914-R01

See Parts List for a complete listing of optional accessories.

Specifications on this page are subject to change without notice. Every attempt has been made to ensure the accuracy of this drawing,; however, Traxxas cannot be held responsible for typographical or other errors.

PARTS SHOWN IN BOLD ARE OPTIONAL ACCESSORIES.

Part categories and individual part listings are arranged alphabetically.

Bearings & Bushings

4607 **Ball bearings (5x11x4mm) (8)**
2728 **Ball bearings (5x8x2.5mm) (2)**
5116 Ball bearings, blue rubber sealed (5x11x4mm) (2)
5114 **Ball bearings, blue rubber sealed (5x8x2.5mm) (2)**
2545 Bellcrank bushings (plastic) (5x8x2.5mm) (4)
1675 **Bushings, self-lubricating (5x11x4mm) (14)**
1985 PTFE-coated washers, 5x8x0.5mm (20) (use with ball bearings)

Body & Accessories

1926 **Antenna caps, vinyl (2)/ antenna spool**
1726 Antenna, tube (1)/ vinyl antenna cap (1)/ wire retainer (1)
3935 Body clip (mounting clip), angled, 90-degrees (10)
3935A **Body clip (mounting clip), angled, 90-degrees (black) (10)**
3934 Body clips, heavy duty (12)
1914R Body mount, front & rear (black)/ body posts, 52mm (2), 38mm (2), 25mm (2), 6.5mm (2)/ body post extensions (4)/ hardware
1815 Body washers (8)
6716 **Body washers, foam, 2mm (2)/ 3mm (2)/ 4mm (4)**
6811 Body, Slash 4X4 (clear, requires painting)/ window masks/ decal sheet
6811R **Body, Slash 4X4, heavy duty (clear, untrimmed, requires painting)/ window masks/ decal sheet**
6811X **Body, Slash 4X4, ProGraphix (Graphics are printed, requires paint & final color application)/ decal sheet**
6849 **Body, Slash 4X4/Slash, Fox Edition (painted, decals applied)**
2514 **Decal sheet, racing sponsors**
5813 **Decal Sheet, Slash**
9950 **Official Team Traxxas® racing decal set (flag logo/ 6-color)**
5846 Paint masks, body

Chassis & Attachments

5526 Antenna crimp nut, aluminum (blue-anodized)/ antenna nut tools
5526R **Antenna crimp nut, aluminum (red-anodized)/ antenna nut tools**
1914R Body mount, front & rear (black)/ body posts, 52mm (2), 38mm (2), 25mm (2), 6.5mm (2)/ body post extensions (4)/ hardware
5624 Box, receiver (sealed)/ foam pad/ silicone grease/ 3x8mm BCS (2)/ 2.5x8mm CS (2)/ 3x6mm BCS (2)
5835 Bumper, front/ bumper mount, front (black)
5835P **Bumper, front/ bumper mount, front (pink)**
5836 Bumper, rear/ bumper mount, rear (black)
5836P **Bumper, rear/ bumper mount, rear (pink)**
5830 **Chassis conversion kit, low CG (Slash)**
5832 **Chassis, low CG (black)**
5832A **Chassis, low CG (blue)**
5832G **Chassis, low CG (grey)**
5822 Chassis, Slash
5822A **Chassis, Slash (black)**
5827 Hold down, battery/ hold down retainer/ battery post/ foam spacer/ angled body clip
5827X **Hold down, battery/ hold down retainer/ battery post/ foam spacer/ angled body clip (allows for installation of taller, multi-cell batteries)**
5831 **Lower chassis, low CG (black)**
5831A **Lower chassis, low CG (blue)**
5831G **Lower chassis, low CG (grey)**
5823 Nerf bars, chassis (black)
5833 **Nerf bars, low CG (black)**
5833A **Nerf bars, low CG (blue)**
5833G **Nerf bars, low CG (grey)**
5625 Seal kit, receiver box (includes o-ring, seals, and silicone grease)
5837 Skidplates, front & rear (black)
5185 **Tires, rubber (2) (fits Traxxas® wheelie bar wheels)**
4974 **Wheelie bar arm (1)/ connector (1)/ 3x12 SS (hex drive) (4)**
3677A **Wheelie bar mount (1) / hardware (green)**
3677P **Wheelie bar mount (1) / hardware (pink)**
3677 Wheelie bar mount (1)/ hardware (black)
3677X **Wheelie bar mount (1)/ hardware (blue)**
3678 **Wheelie bar, assembled (black) (fits Slash, Bandit, Rustler®, Stampede® series)**
3678X **Wheelie bar, assembled (blue) (fits Slash, Bandit, Rustler®, Stampede® series)**
3678A **Wheelie bar, assembled (green) (fits Slash, Bandit, Rustler®, Stampede® series)**
3678P **Wheelie bar, assembled (pink) (fits Slash, Bandit, Rustler®, Stampede® series)**
4976 **Wheels (4)/ axles (2) (for T-Maxx®/E-Maxx wheelie bar)**
5186A **Wheels, aluminum (blue-anodized) (2)/ 5x8mm ball bearings (4)/ axles (2)/ rubber tires (2)**
5186 **Wheels, aluminum (red-anodized) (2)/ 5x8mm ball bearings (4)/ axles (2)/ rubber tires (2)**

Differential Components

2381X Main diff with steel ring gear/ side cover plate/ screws (Bandit, Stampede®, Rustler®)
2382 Planet gears (4)/ planet shafts (4)/ sun gears (2)/sun gear alignment shaft (1) all hardened steel
2388X Planetary gear differential with steel ring gear (complete) (fits Bandit, Stampede®, Rustler®)
5169 Screws, 2.6x8mm countersunk machine (6)
1647 Silicone grease

Driveline Components

5116 Ball bearings, blue rubber sealed (5x11x4mm) (2)
9059X **Cross pin (2)/ drive pin (2) (repairs 2 axle shafts)**
9057X **Differential output shafts, steel-splined constant-velocity (2)**
4628R Differential output yokes, black (2)/ 3x5mm countersunk screws (2)/ screw pin (2)
4628X **Differential output yokes, hardened steel (w/ U-joints) (2)**
6828X **Differential output yokes, heavy duty (2)/ screw pin (2)**
6852X **Driveshaft assembly, rear, heavy duty (1) (left or right) (fully assembled, ready to install)/ screw pin (1)**
6852R **Driveshafts, rear, steel-spline constant-velocity (complete assembly) (2)**
9052X **Driveshafts, rear, steel-spline constant-velocity (complete assembly) (2)**
1953 **Half shaft pro-pack (internal-splined (6)/ external-splined (6) (plastic shafts only)**
9055X **Half shaft, external splined (steel-spline constant velocity) (1)**
6750 **Half shaft, external splined (steel-spline constant-velocity) (1)**
9056X **Half shaft, internal splined (steel-spline constant velocity) (1)**
6751 **Half shaft, internal splined (steel-spline constant-velocity) (1)**
6850X **Half shafts, heavy duty (external splined (2)/ internal splined (2))/ metal u-joints (4)**
1951 Half shafts, long truck (external-splined (2) & internal-splined (2)/ metal U-joints (4)
6757 **Rebuild kit, steel-splined constant-velocity driveshafts (includes pins, dustboots, lube, and hardware)**
9058X **Rebuild kit, steel-splined constant-velocity driveshafts (includes pins, lube, and hardware for two axle shafts)**
3752 Stub axle carriers (2) (requires 5x11x4mm bearings)
3652A **Stub axle carriers, Rustler®/Stampede®/Bandit (2), 6061-T6 aluminum (blue-anodized)/ 5x11mm ball bearings (4)**
3652G **Stub axle carriers, Rustler®/Stampede®/Bandit (2), 6061-T6 aluminum (green-anodized)/ 5x11mm ball bearings (4)**
3652P **Stub axle carriers, Rustler®/Stampede®/Bandit (2), 6061-T6 aluminum (pink-anodized)/ 5x11mm ball bearings (4)**
3652P **Stub axle carriers, Rustler®/Stampede®/Bandit (2), 6061-T6 aluminum (pink-anodized)/ 5x11mm ball bearings (4)**
3652X **Stub axle carriers, Rustler®/Stampede®/Bandit (2), 6061-T6 aluminum (red-anodized)/ 5x11mm ball bearings (4)**
2754 Stub axle pins (4)
6753 **Stub axle, rear, 5mm (steel-splined constant-velocity driveshaft) (1)**
9053X **Stub axle, rear, steel-splined constant velocity (1)**
2753X Stub axles, rear (2)
6853X **Stub axles, rear, heavy duty (2)/pins (2)**

Front Suspension & Steering

3637 Axles (front) (2)
2728 **Ball bearings (5x8x2.5mm) (2)**
5116 Ball bearings, blue rubber sealed (5x11x4mm) (2)
2545 Bellcrank bushings (plastic) (5x8x2.5mm) (4)
2530 **Bulkhead (front) (black)**
2530A Bulkhead (front) (grey)
3643X **Camber links, front (TUBES blue-anodized, 7075-T6 aluminum, stronger than titanium) (83mm) (2)/ rod ends (4)/ aluminum wrench (1) (#2579 3x15 BCS (4) required for installation)**
3643G **Camber links, front (TUBES green-anodized, 7075-T6 aluminum, stronger than titanium) (83mm) (2)/ rod ends (4)/ aluminum wrench (1) (#2579 3x15 BCS (4) required for installation)**
3643R **Camber links, front (TUBES red-anodized, 7075-T6 aluminum, stronger than titanium) (83mm) (2)/ rod ends (4)/ aluminum wrench (1) (#2579 3x15 BCS (4) required for installation)**
3632 Caster blocks (l&r) (30-degree)
3632A **Caster blocks, 30-degree, blue-anodized 6061-T6 aluminum (left & right)/ suspension screw pin (2)**

SLASH KIT™ (58014-4)

3632G	**Caster blocks, 30-degree, green-anodized 6061-T6 aluminum (left & right)/ suspension screw pin (2)**
3632P	**Caster blocks, 30-degree, pink-anodized 6061-T6 aluminum (left & right)/ suspension screw pin (2)**
3632X	**Caster blocks, 30-degree, red-anodized 6061-T6 aluminum (left & right)/ suspension screw pin (2)**
5347	Rod ends, Revo® (large) with hollow balls (12)
3646	Screws, 3x15mm flat-head machine (hex drive) (6)
3744	Servo saver w/adapters
3639	Shock tower (front)
3743	Steering bellcranks (l&r)/ draglink
3743A	**Steering bellcranks, drag link (blue-anodized 6061-T6 aluminum)/ 5x8mm ball bearings (4)/ hardware (assembled)**
3743G	**Steering bellcranks, drag link (green-anodized 6061-T6 aluminum)/ 5x8mm ball bearings (4)/ hardware (assembled)**
3743P	**Steering bellcranks, drag link (pink-anodized 6061-T6 aluminum)/ 5x8mm ball bearings (4)/ hardware (assembled)**
3743X	**Steering bellcranks, drag link (red-anodized 6061-T6 aluminum)/ 5x8mm ball bearings (4)/ hardware (assembled)**
6845X	**Steering bellcranks/ servo saver/ servo saver spring/ servo spring retainer/servo horn, steering**
3736	Steering blocks, left & right (2) (requires 5x11x4mm bearings)
3636A	**Steering blocks, Rustler®/Stampede®/Bandit (2), 6061-T6 aluminum (blue-anodized)/ 5x11mm ball bearings (4)**
3636G	**Steering blocks, Rustler®/Stampede®/Bandit (2), 6061-T6 aluminum (green-anodized)/ 5x11mm ball bearings (4)**
3636P	**Steering blocks, Rustler®/Stampede®/Bandit (2), 6061-T6 aluminum (pink-anodized)/ 5x11mm ball bearings (4)**
3636X	**Steering blocks, Rustler®/Stampede®/Bandit (2), 6061-T6 aluminum (red-anodized)/ 5x11mm ball bearings (4)**
3631	Suspension arms (front) (2)
3631X	**Suspension arms, black, front, heavy duty (2)**
3631A	**Suspension arms, blue, front, heavy duty (2)**
3631G	**Suspension arms, green, front, heavy duty (2)**
3631T	**Suspension arms, orange, front, heavy duty (2)**
3631R	**Suspension arms, red, front, heavy duty (2)**
3631L	**Suspension arms, white, front, heavy duty (2)**
2640	Suspension pins, 44mm (2) w/ e-clips
3640	Suspension screw pin set, steel (hex drive) (requires part #2640 for a complete suspension pin set) (Bandit, Rustler®, Stampede®)
2532	Tie bar, fiberglass
1935	Turnbuckles, 36mm (2)
3139A	**Turnbuckles, aluminum (blue-anodized), toe links, 59mm (2) (assembled w/ rod ends & hollow balls) (requires 5mm aluminum wrench #5477)**
3139X	**Turnbuckles, aluminum (red-anodized), toe links, 59mm (2) (assembled with rod ends & hollow balls) (requires 5mm aluminum wrench #5477)**
3644	Turnbuckles, camber link, 39mm (69mm center to center) (assembled with rod ends and hollow balls) (1 left, 1 right) (fits front & rear on Slash)
3745	Turnbuckles, toe link, 59mm (78mm center to center) (2) (assembled with rod ends and hollow balls)

Hardware

1926	**Antenna caps, vinyl (2)/ antenna spool**
1726	Antenna, tube (1)/ vinyl antenna cap (1)/ wire retainer (1)
3935	Body clip (mounting clip), angled, 90-degrees (10)
3935A	**Body clip (mounting clip), angled, 90-degrees (black) (10)**
3934	Body clips, heavy duty (12)
1589	Double-sided adhesive tape (25mm x 25mm) (2)
1633	E-clips/ C-rings
2586	Screws, 3x15mm cap-head machine (hex drive) (6)
2745	Nuts, 3mm nylon locking (12)
3647	Nuts, 4mm flanged nylon locking (steel, serrated) (8)
1747	Nuts, 4mm nylon locking (10)
1747R	**Nuts, aluminum, flanged, serrated (4mm) (blue-anodized) (4)**
1747G	**Nuts, aluminum, flanged, serrated (4mm) (green-anodized) (4)**
1747P	**Nuts, aluminum, flanged, serrated (4mm) (pink-anodized) (4)**
1747P	**Nuts, aluminum, flanged, serrated (4mm) (pink-anodized) (4)**
1747A	**Nuts, aluminum, flanged, serrated (4mm) (red-anodized) (4)**
1985	PTFE-coated washers, 5x8x0.5mm (20) (use with ball bearings)
5525	Rod ends (12)/ hollow balls (12)
5347	Rod ends, Revo® (large) with hollow balls (12)
2742X	Rod ends, short (6)/ hollow balls (6)
3215	Screws, 2.5x6mm cap-head machine (hex drive) (6)
3965	Screws, 2.5x8mm cap-head machine (6)
2577	Screws, 3x10mm button-head machine (hex drive) (6)
4859	Screws, 3x10mm flat-head machine (hex drive) (4)
2578	Screws, 3x12mm button-head machine (hex drive) (6)
2552	Screws, 3x12mm countersunk machine (6) (hex drive)
2579	Screws, 3x15mm button-head machine (hex drive) (6)
3646	Screws, 3x15mm flat-head machine (hex drive) (6)
2583	Screws, 3x18mm button-head machine (hex drive) (6)
2580	Screws, 3x20mm button-head machine (hex drive) (6)
2591	Screws, 3x23mm button-head machine (hex drive) (6)
2582	Screws, 3x30mm button-head machine (hex drive) (6)
2592	Screws, 3x40mm button-head machine (hex drive) (6)
2575	Screws, 3x6mm button-head machine (hex drive) (6)
3932	Screws, 3x6mm flat-head machine (hex drive) (6)
2576	Screws, 3x8mm button-head machine (hex drive) (6)
3931	Screws, 3x8mm flat-head machine (hex drive) (6)
3937	Screws, 4x12mm button-head machine (hex drive) (6)
2542	Screws, 4x12mm countersunk machine (hex drive) (6)
2546	Screws, 4x15mm countersunk machine (hex drive) (6)
2743	Set (grub) screws, 3mm hardened (12)
5529	Shim set, 3x7x1mm (2), 3x6x0.5mm (4), 3x7x2mm (2)/ hollow balls, captured (4)
3742	Shoulder screws, steering bellcranks (3x30mm cap-head machine) (2)/ draglink shoulder screws (chrome) (2)
3642X	**Shoulder screws, Ultra Shocks (3x12 hex drive) (6)**
2754	Stub axle pins (4)
2746	**Washers, 3x6mm metal (12)**

Motors & Electronics

1726	Antenna, tube (1)/ vinyl antenna cap (1)/ wire retainer (1)
2260	**BEC assembly (complete)**
3790	Gear adapter, fixed
2072A	Gear set (for 2070, 2075 servos)
2252	**Gear set, metal (for 2250, 2255 servos)**
3785	Motor, Titan® 12T (12-Turn, 550 size)
3351R	**Motor, Velineon® 3500, brushless (assembled with 12-gauge wire and gold-plated bullet connectors)**
3931	Screws, 3x8mm flat-head machine (hex drive) (6)
2254	**Servo case, aluminum (blue-anodized) (middle) (for 2250 servo)**
2253	**Servo case, aluminum (red-anodized) (middle) (for 2255 servo)**
2251	**Servo case, plastic (top, middle, bottom)/ gaskets/ hardware (for 2250, 2255 servos)**
2074	Servo case/gaskets (for 2056 and 2075 waterproof servos)
2075R	**Servo, digital high-speed, metal gear (ball bearing), waterproof**
2075	Servo, digital high-torque (ball bearing), waterproof
2250	**Servo, digital high-torque 330 coreless, metal gear (ball bearing), waterproof**
2255	**Servo, digital high-torque 400 brushless, metal gear (ball bearing), waterproof**
2075X	**Servo, digital high-torque, metal gear (ball bearing), waterproof**
3350R	**Velineon® VXL-3s Brushless Power System, waterproof (includes VXL-3s waterproof ESC, Velineon 3500 motor, and speed control mounting plate (part #3725R))**
3355R	**Velineon® VXL-3s Electronic Speed Control, waterproof (brushless) (fwd/rev/brake)**
3018R	XL-5 Electronic Speed Control, waterproof (land version, low-voltage detection, fwd/rev/brake)

Radio System, Batteries & Chargers

2842X	**5000mAh 7.4v 2-Cell 25C LiPo Battery**
2843X	**5800mAh 7.4v 2-Cell 25C LiPo Battery**
2869X	**7600mAh 7.4v 2-Cell 25C LiPo Battery**
2976	**AC to DC converter, 40W**
2938X	**Adapter, Traxxas® iD® LiPo battery (adapts Traxxas iD batteries to separate balance ports)**
5526	Antenna crimp nut, aluminum (blue-anodized)/ antenna nut tools
5526R	**Antenna crimp nut, aluminum (red-anodized)/ antenna nut tools**
2943	**Battery charge indicators (green (4), blue (4), grey (4))**
6548	Battery door, transmitter (replacement for #6516, 6517, 6528, 6529, 6530 transmitters)
2914	**Battery, Power Cell AA Alkaline (4)**
2923X	**Battery, Power Cell, 3000mAh (NiMH, 7-C flat, 8.4V)**
2926X	**Battery, Power Cell, 3000mAh (NiMH, 7-C hump, 8.4V)**
2940X	**Battery, Series 3 Power Cell, 3300mAh (NiMH, 7-C flat, 8.4V)**
2941X	**Battery, Series 3 Power Cell, 3300mAh (NiMH, 7-C hump, 8.4V)**
2950X	**Battery, Series 4 Power Cell, 4200mAh (NiMH, 7-C flat, 8.4V)**
2951X	**Battery, Series 4 Power Cell, 4200mAh (NiMH, 7-C hump, 8.4V)**
2960X	**Battery, Series 5 Power Cell, 5000mAh (NiMH, 7-C flat, 8.4V)**
2961X	**Battery, Series 5 Power Cell, 5000mAh (NiMH, 7-C hump, 8.4V)**
2983	**Battery/charger completer pack (includes #2969 2-amp NiMH peak detecting AC charger (1), #2923X 3000mAh 8.4V 7-cell NiMH battery (1))**
2992	**Battery/charger completer pack (includes #2970 iD® charger (1), #2843X 5800mAh 7.4V 2-cell 25C LiPo battery (1))**
2260	**BEC assembly (complete)**
2975	**Charger, DC, 4 amp (6 - 7 cell, 7.2 - 8.4 volt, NiMH)**
2972	**Charger, EZ-Peak® Dual, 100W, NiMH/LiPo with iD® Auto Battery Identification**
2973	**Charger, EZ-Peak® Live Dual, 200W, NiMH/LiPo with iD® Auto Battery Identification**

BFGoodrich® Tires Trademarks are used under license from Michelin Group Companies.

2971	**Charger, EZ-Peak® Live, 100W, NiMH/LiPo with iD® Auto Battery Identification**
2970	**Charger, EZ-Peak® Plus, 4 amp, NiMH/LiPo with iD® Auto Battery Identification**
6525	**Communication link, telemetry expander**
6541	**Connector, power tap (with cable) (long)/ wire tie**
2978	**Fuse, charger, 5A (2) (for #2974, 2975, 2977)**
2072A	Gear set (for 2070, 2075 servos)
2252	**Gear set, metal (for 2250, 2255 servos)**
2968X	**LiPo cell voltage checker/balancer (includes #2938X adapter for Traxxas® iD® batteries)**
2968	**LiPo cell voltage checker/balancer (requires #2938X adapter for Traxxas® iD® batteries)**
6554	**Mount, telemetry expander (fits Bandit, Rustler®, Slash 2WD)**
6535	**Mount, temperature sensor (electric motors)/ wire tie/ thermal pad**
6519	Receiver, micro, TQ 2.4GHz (3-channel)
6518	**Receiver, micro, TQi 2.4GHz with telemetry (5-channel)**
6552	**Seal kit, expander box (includes o-ring, seals, and silicone grease)**
6526	**Sensor, auto-detectable, temperature**
6527	**Sensor, auto-detectable, voltage**
6520	**Sensor, RPM (long)/ 3x4mm BCS (2)/ 3x4 GS (1)**
6521	**Sensor, temperature and voltage (long)**
2254	**Servo case, aluminum (blue-anodized) (middle) (for 2250 servo)**
2253	**Servo case, aluminum (red-anodized) (middle) (for 2255 servo)**
2251	**Servo case, plastic (top, middle, bottom)/ gaskets/ hardware (for 2250, 2255 servos)**
2074	Servo case/gaskets (for 2056 and 2075 waterproof servos)
2075R	**Servo, digital high-speed, metal gear (ball bearing), waterproof**
2075	Servo, digital high-torque (ball bearing), waterproof
2250	**Servo, digital high-torque 330 coreless, metal gear (ball bearing), waterproof**
2255	**Servo, digital high-torque 400 brushless, metal gear (ball bearing), waterproof**
2075X	**Servo, digital high-torque, metal gear (ball bearing), waterproof**
6553X	**Telemetry expander 2.0 and GPS module 2.0, TQi radio system**
6550X	**Telemetry expander 2.0, TQi radio system (for use only with #6551X GPS module)**
6551X	**Telemetry GPS module 2.0, TQi radio system (for use only with #6550X telemetry expander)**
6538	**Telemetry trigger magnet holders, spur gear/ magnet, 5x2mm (1)/ 3x8mm CCS (3)/ 3x10mm CCS (3)**
6540	**Telemetry trigger magnet, 5X2mm (1)**
6509R	**TQi 2.4 GHz High Output radio system, 2-channel, Traxxas Link™ enabled, TSM (2-ch transmitter, 5-ch micro receiver)**
6507R	**TQi 2.4 GHz High Output radio system, 4-channel with Traxxas Link™ Wireless Module, TSM (4-ch transmitter, 5-ch micro receiver)**
6516	Transmitter, TQ 2.4GHz, 2-channel (transmitter only)
6528	**Transmitter, TQi Traxxas Link™ enabled, 2.4GHz high output, 2-channel (transmitter only)**
6529	**Transmitter, TQi Traxxas Link™ enabled, 2.4GHz high output, 3-channel (transmitter only)**
6530	**Transmitter, TQi Traxxas Link™ enabled, 2.4GHz high output, 4-channel (transmitter only)**
6511	**Traxxas Link™ Wireless Module**
3355R	**Velineon® VXL-3s Electronic Speed Control, waterproof (brushless) (fwd/rev/brake)**
6537	**Wire retainers, gear cover/ 3x4mm BCS (2)**
3018R	XL-5 Electronic Speed Control, waterproof (land version, low-voltage detection, fwd/rev/brake)

Rear Suspension

5116	Ball bearings, blue rubber sealed (5x11x4mm) (2)
3644X	**Camber links, rear (TUBES blue-anodized, 7075-T6 aluminum, stronger than titanium) (73mm) (2)/ rod ends (4)/ aluminum wrench (1) (#2579 3x15 BCS (4) required for installation)**
3644G	**Camber links, rear (TUBES green-anodized 7075-T6 aluminum, stronger than titanium) (73mm) (2)/ rod ends (4)/ aluminum wrench (1) (#2579 3x15 BCS (4) required for installation)**
3644R	**Camber links, rear (TUBES red-anodized, 7075-T6 aluminum, stronger than titanium) (73mm) (2)/ rod ends (4)/ aluminum wrench (1) (#2579 3x15 BCS (4) required for installation)**
1951	Half shafts, long truck (external-splined (2) & internal-splined (2)/ metal U-joints (4)
3638	Shock tower (rear)
3752	Stub axle carriers (2) (requires 5x11x4mm bearings)
3652A	**Stub axle carriers, Rustler®/Stampede®/Bandit (2), 6061-T6 aluminum (blue-anodized)/ 5x11mm ball bearings (4)**
3652G	**Stub axle carriers, Rustler®/Stampede®/Bandit (2), 6061-T6 aluminum (green-anodized)/ 5x11mm ball bearings (4)**
3652P	**Stub axle carriers, Rustler®/Stampede®/Bandit (2), 6061-T6 aluminum (pink-anodized)/ 5x11mm ball bearings (4)**
3652P	**Stub axle carriers, Rustler®/Stampede®/Bandit (2), 6061-T6 aluminum (pink-anodized)/ 5x11mm ball bearings (4)**
3652X	**Stub axle carriers, Rustler®/Stampede®/Bandit (2), 6061-T6 aluminum (red-anodized)/ 5x11mm ball bearings (4)**
2753X	Stub axles, rear (2)
2555	Suspension arms, (rear) (2)
2555X	**Suspension arms, black, rear, heavy duty (2)**
2555A	**Suspension arms, blue, rear, heavy duty (2)**
2555G	**Suspension arms, green, rear, heavy duty (2)**
2555T	**Suspension arms, orange, rear, heavy duty (2)**
2555R	**Suspension arms, red, rear, heavy duty (2)**
2555L	**Suspension arms, white, rear, heavy duty (2)**
3640	Suspension screw pin set, steel (hex drive) (requires part #2640 for a complete suspension pin set) (Bandit, Rustler®, Stampede®)
3644	Turnbuckles, camber link, 39mm (69mm center to center) (assembled with rod ends and hollow balls) (1 left, 1 right) (fits front & rear on Slash)

Shocks (Pro-level Aluminum)

2664	**Big Bore shock cylinder (long) (1)**
2666	**Big Bore shock cylinder (XX-long) (1)**
5862	**Big Bore shocks (hard-anodized & PTFE-coated T6 aluminum) (assembled with TiN shafts and springs) (front & rear) (4)**
2660	**Big Bore shocks (long) (hard-anodized & PTFE-coated T6 aluminum) (assembled with TiN shafts) w/o springs (front) (2)**
2662	**Big Bore shocks (XX-long) (hard-anodized & PTFE-coated T6 aluminum) (assembled with TiN shafts) w/o springs (rear) (2)**
2669	**Piston head set (2-hole (2)/ 3-hole (2))/ shock mounting bushings & washers (2) (Big Bore Shocks)**
2362	**Rebuild kit, Ultra shocks (for 2 shocks)**
1942	Rod ends (16 long & 4 short)/ hollow ball connectors (18)/ ball screws (2)
2742X	Rod ends, short (6)/ hollow balls (6)
2667	**Shock caps, aluminum (Big Bore Shocks) (2)**
1664T	**Shock shafts, hardened steel, titanium nitride coated (long) (2)**
2656T	**Shock shafts, hardened steel, titanium nitride coated (xx-long) (2)**
1664	Shock shafts, steel, chrome finish (long) (2)
2656	Shock shafts, steel, chrome finish (xx-long) (2)
1765	Silicone diaphragms (4)
1666	Silicone shock oil (30 wt)
2668	**Spring retainers, upper & lower (2)/ spring pre-load spacers: 1mm (4)/ 1.5mm (2)/ 2mm (2)/ 4mm (2)/ 8mm (2) (Big Bore Shocks)**
5860	**Springs, front (white) (progressive rate) (2) (fits #5862 aluminum Big Bore shocks)**
5859	**Springs, rear (white) (progressive rate) (2) (fits #5862 aluminum Big Bore shocks)**

Shocks (Ultra Shocks)

3765A	Body, Ultra Shock(s) (long) (grey) (2)
3766A	Body, Ultra Shock(s) (XXL) (grey) (2)
2362	**Rebuild kit, Ultra shocks (for 2 shocks)**
1942	Rod ends (16 long & 4 short)/ hollow ball connectors (18)/ ball screws (2)
2742X	Rod ends, short (6)/ hollow balls (6)
3767	**Shock caps (2)/ shock bottoms (2)**
8361	Shock caps (black) (4) (assembled with hollow balls)
3767A	**Shock caps, aluminum (blue-anodized) (4) (fits all Ultra Shocks)**
3767G	**Shock caps, aluminum (green-anodized) (4) (fits all Ultra Shocks)**
3767P	**Shock caps, aluminum (pink-anodized) (4) (fits all Ultra Shocks)**
3767X	**Shock caps, aluminum (red-anodized) (4) (fits all Ultra Shocks)**
1664T	**Shock shafts, hardened steel, titanium nitride coated (long) (2)**
2656T	**Shock shafts, hardened steel, titanium nitride coated (xx-long) (2)**
1664	**Shock shafts, steel, chrome finish (long) (2)**
2656	Shock shafts, steel, chrome finish (xx-long) (2)
3642X	**Shoulder screws, Ultra Shocks (3x12 hex drive) (6)**
1765	Silicone diaphragms (4)
1666	Silicone shock oil (30 wt)
3769	Spring pre-load spacers: 1mm (4)/ 2mm (2)/ 4mm (2)/ 8mm (2)
3768	Spring retainers, upper & lower (2)/ piston head set (2-hole (2)/ 3-hole (2))
2458	**Springs, front (black) (2)**
2458P	**Springs, front (pink) (2)**
5857P	**Springs, front (pink) (progressive rate) (2)**
2458A	**Springs, front (white) (2)**
5857	Springs, front (white) (progressive rate) (2)
3757	**Springs, rear (black) (2)**
3757T	**Springs, rear (blue) (2)**
3757A	**Springs, rear (green) (2)**

BFGoodrich® Tires Trademarks are used under license from Michelin Group Companies.

SLASH KIT™ (58014-4)

3757P **Springs, rear (pink) (2)**
5858P **Springs, rear (pink) (progressive rate) (2)**
3757X **Springs, rear (white) (2)**
5858 Springs, rear (white) (progressive rate) (2)
4957 **Springs, red (for Ultra Shocks only) (2.5 rate) (f/r) (2)**
3760 **Ultra Shocks (black) (long) (complete w/ spring pre-load spacers & springs) (front) (2)**
3762 **Ultra Shocks (black) (xx-long) (complete w/ spring pre-load spacers & springs) (rear) (2)**
3760A Ultra Shocks (grey) (long) (complete w/ spring pre-load spacers & springs) (2)
3762A Ultra Shocks (grey) (xx-long) (complete w/ spring pre-load spacers & springs) (rear) (2)

Slipper Clutch Components

3793 Input shaft (slipper shaft) / spring pin
5552X Rebuild kit, slipper clutch (steel disc/ friction pads (3)/ spring (2)/ pin/ 4.0mm NL (1)/ 5.0mm NL (1))
2554 Screws, 3x6mm cap-head machine (hex drive) (6)
5556 Slipper pressure plate & hub (aluminum alloy)

Spur Gears & Pinion Gears

3790 Gear adapter, fixed
2416 Gear, 16-T pinion (48-pitch) / set screw
1918 **Gear, 18-T pinion (48-pitch) / set screw**
2419 **Gear, 19-T pinion (48-pitch) / set screw**
2423 **Gear, 23-T pinion (48-pitch) / set screw**
2426 **Gear, 26-T pinion (48-pitch)/set screw**
2431 **Gear, 31-T pinion (48-pitch) / set screw**
4725 **Gear, pinion (25-tooth) (48-pitch) / set screw**
4728 **Gear, pinion (28-tooth) (48-pitch)/ set screw**
4683 **Spur gear, 83-tooth (48-pitch) (for models with Torque-Control slipper clutch)**
4686 **Spur gear, 86-tooth (48-pitch) (for models with Torque-Control slipper clutch)**
4690 Spur gear, 90-tooth (48-pitch) (for models with Torque-Control slipper clutch)

Steering Components

2728 **Ball bearings (5x8x2.5mm) (2)**
2545 Bellcrank bushings (plastic) (5x8x2.5mm) (4)
3643X **Camber links, front (TUBES blue-anodized, 7075-T6 aluminum, stronger than titanium) (83mm) (2)/ rod ends (4)/ aluminum wrench (1) (#2579 3x15 BCS (4) required for installation)**
3643G **Camber links, front (TUBES green-anodized, 7075-T6 aluminum, stronger than titanium) (83mm) (2)/ rod ends (4)/ aluminum wrench (1) (#2579 3x15 BCS (4) required for installation)**
3643R **Camber links, front (TUBES red-anodized, 7075-T6 aluminum, stronger than titanium) (83mm) (2)/ rod ends (4)/ aluminum wrench (1) (#2579 3x15 BCS (4) required for installation)**
1985 PTFE-coated washers, 5x8x0.5mm (20) (use with ball bearings)
2742 Rod ends, long (6)/ hollow ball connectors (6)
5347 Rod ends, Revo® (large) with hollow balls (12)
3744 Servo saver w/adapters
3742 Shoulder screws, steering bellcranks (3x30mm cap-head machine) (2)/ draglink shoulder screws (chrome) (2)
3743 Steering bellcranks (l&r)/ draglink
3743A **Steering bellcranks, drag link (blue-anodized 6061-T6 aluminum)/ 5x8mm ball bearings (4)/ hardware (assembled)**
3743G **Steering bellcranks, drag link (green-anodized 6061-T6 aluminum)/ 5x8mm ball bearings (4)/ hardware (assembled)**
3743P **Steering bellcranks, drag link (pink-anodized 6061-T6 aluminum)/ 5x8mm ball bearings (4)/ hardware (assembled)**
3743X **Steering bellcranks, drag link (red-anodized 6061-T6 aluminum)/ 5x8mm ball bearings (4)/ hardware (assembled)**
6845X **Steering bellcranks/ servo saver/ servo saver spring/ servo spring retainer/servo horn, steering**
1935 Turnbuckles, 36mm (2)
3139A **Turnbuckles, aluminum (blue-anodized), toe links, 59mm (2) (assembled w/ rod ends & hollow balls) (requires 5mm aluminum wrench #5477)**
3139X **Turnbuckles, aluminum (red-anodized), toe links, 59mm (2) (assembled with rod ends & hollow balls) (requires 5mm aluminum wrench #5477)**
3745 Turnbuckles, toe link, 59mm (78mm center to center) (2) (assembled with rod ends and hollow balls)
2746 Washers, 3x6mm metal (12)

Suspension Linkage

3643X **Camber links, front (TUBES blue-anodized, 7075-T6 aluminum, stronger than titanium) (83mm) (2)/ rod ends (4)/ aluminum wrench (1) (#2579 3x15 BCS (4) required for installation)**
3643G **Camber links, front (TUBES green-anodized, 7075-T6 aluminum, stronger than titanium) (83mm) (2)/ rod ends (4)/ aluminum wrench (1) (#2579 3x15 BCS (4) required for installation)**
3643R **Camber links, front (TUBES red-anodized, 7075-T6 aluminum, stronger than titanium) (83mm) (2)/ rod ends (4)/ aluminum wrench (1) (#2579 3x15 BCS (4) required for installation)**
3644X **Camber links, rear (TUBES blue-anodized, 7075-T6 aluminum, stronger than titanium) (73mm) (2)/ rod ends (4)/ aluminum wrench (1) (#2579 3x15 BCS (4) required for installation)**
3644G **Camber links, rear (TUBES green-anodized 7075-T6 aluminum, stronger than titanium) (73mm) (2)/ rod ends (4)/ aluminum wrench (1) (#2579 3x15 BCS (4) required for installation)**
3644R **Camber links, rear (TUBES red-anodized, 7075-T6 aluminum, stronger than titanium) (73mm) (2)/ rod ends (4)/ aluminum wrench (1) (#2579 3x15 BCS (4) required for installation)**
5525 Rod ends (12)/ hollow balls (12)
5347 Rod ends, Revo® (large) with hollow balls (12)
3739 Screw pin set (Rustler®/ Bandit/ Stampede®)
5529 Shim set, 3x7x1mm (2), 3x6x0.5mm (4), 3x7x2mm (2)/ hollow balls, captured (4)
2640 Suspension pins, 44mm (2) w/ e-clips
3640 Suspension screw pin set, steel (hex drive) (requires part #2640 for a complete suspension pin set) (Bandit, Rustler®, Stampede®)
3737A **Turnbuckle, aluminum (blue-anodized), 39mm (1)(assembled w/rod ends)/hollow balls (2) (fits front & rear on Slash)**
3737 **Turnbuckle, aluminum (red-anodized), 39mm (1) (assembled w/rod ends)/hollow balls (2) (fits front & rear on Slash)**
3741A **Turnbuckles, aluminum (blue-anodized), camber links, front, 39mm (2), rear, 49mm (2) (assembled w/rod ends & hollow balls)/ wrench**
3139A **Turnbuckles, aluminum (blue-anodized), toe links, 59mm (2) (assembled w/ rod ends & hollow balls) (requires 5mm aluminum wrench #5477)**
3741X **Turnbuckles, aluminum (red-anodized), camber links, front, 39mm (2), rear, 49mm (2) (assembled w/ rod ends & hollow balls)/wrench**
3139X **Turnbuckles, aluminum (red-anodized), toe links, 59mm (2) (assembled with rod ends & hollow balls) (requires 5mm aluminum wrench #5477)**
3644 Turnbuckles, camber link, 39mm (69mm center to center) (assembled with rod ends and hollow balls) (1 left, 1 right) (fits front & rear on Slash)
3745 Turnbuckles, toe link, 59mm (78mm center to center) (2) (assembled with rod ends and hollow balls)

Team Traxxas Items

2514 **Decal sheet, racing sponsors**
6160X **DVD, Maxx® Power! Full Throttle Action (sleeve)**
9950 **Official Team Traxxas® racing decal set (flag logo/ 6-color)**
9909 **Traxxas® racing banner, red & black (3x7 feet)**

Tires & Wheels

5116 Ball bearings, blue rubber sealed (5x11x4mm) (2)
5854 **Hub retainer, 17mm hubs, M4 X 0.7 (4) (use with #5853X, #6856X, #6469)**
3647 Nuts, 4mm flanged nylon locking (steel, serrated) (8)
1747R **Nuts, aluminum, flanged, serrated (4mm) (blue-anodized) (4)**
1747G **Nuts, aluminum, flanged, serrated (4mm) (green-anodized) (4)**
1747P **Nuts, aluminum, flanged, serrated (4mm) (pink-anodized) (4)**
1747P **Nuts, aluminum, flanged, serrated (4mm) (pink-anodized) (4)**
1985 PTFE-coated washers, 5x8x0.5mm (20) (use with ball bearings)
1647 Silicone grease
2754 Stub axle pins (4)
5864 **Tire & wheel assy, glued (SCT black, orange beadlock wheels, SCT off-road racing tires, foam inserts) (2) (2WD front)**
5885A **Tire & wheel assy, glued (SCT Split-Spoke, black, blue beadlock wheels, BFGoodrich® Mud-Terrain™ T/A® KM2 tires, inserts) (2) (2WD Front)**
5883A **Tire & wheel assy, glued (SCT Split-Spoke, black, blue beadlock wheels, BFGoodrich® Mud-Terrain™ T/A® KM2 tire, inserts) (2) (4WD f/r, 2WD rear)**
5880X **Tires & wheels, assembled, glued (SCT satin chrome, beadlock style wheels, Kumho tires, foam inserts) (2) (4WD front/rear, 2WD rear only)**
5880 **Tires & wheels, assembled, glued (SCT satin chrome, black beadlock style wheels, Kumho tires, foam inserts) (2) (4WD front/rear, 2WD rear only)**
5882 **Tires & wheels, assembled, glued (SCT Split-Spoke satin chrome, black beadlock style wheels, Kumho tires, foam inserts) (2) (2WD front)**
6873X **Tires & wheels, assembled, glued (S1 ultra-soft off-road racing compound) (SCT Split-Spoke satin chrome, black beadlock style wheels, BFG Mud-Terrain tires, foam inserts) (2) (4WD front/rear, 2WD rear only)**

BFGoodrich® Tires Trademarks are used under license from Michelin Group Companies.

5882R Tires & wheels, assembled, glued (S1 ultra-soft off-road racing compound) (SCT Split-Spoke satin chrome, black beadlock style wheels, Kumho tires, foam inserts) (2) (2WD front)

6874R Tires & wheels, assembled, glued (S1 ultra-soft off-road racing compound) (SCT Split-Spoke satin chrome, black beadlock style wheels, Kumho tires, foam inserts) (2) (4WD front/rear, 2WD rear only)

5877R Tires & wheels, assembled, glued (S1 ultra-soft, off-road racing compound) (SCT Split-Spoke chrome, red beadlock style wheels, BFGoodrich® Mud-Terrain™ T/A® KM2 tires) (2) (2WD front)

6873R Tires & wheels, assembled, glued (S1 ultra-soft, off-road racing compound) (SCT Split-Spoke chrome, red beadlock style wheels, BFGoodrich® Mud-Terrain™ T/A® KM2 tires, foam inserts) (2) (4WD f/r, 2WD rear)

5863 Tires & wheels, assembled, glued (SCT black, orange beadlock wheels, dual profile (2.2" outer, 3.0" inner), SCT off-road racing tire, foam inserts) (2) (4WD f/r, 2WD rear) (TSM® rated)

5869 Tires & wheels, assembled, glued (SCT chrome, red beadlock style wheels, BFGoodrich® Mud-Terrain™ T/A® KM2 tires, foam inserts) (2) (2WD front)

5867 Tires & wheels, assembled, glued (SCT chrome, red beadlock style wheels, BFGoodrich® Mud-Terrain™ T/A® KM2 tires, foam inserts) (2)(4WD front/rear, 2WD rear only)

5873R Tires & wheels, assembled, glued (SCT satin chrome red beadlock wheels, ultra-soft S1 compound off-road racing tires, inserts) (2) (2WD rear, 4WD f/r)

5881X Tires & wheels, assembled, glued (SCT satin chrome, beadlock style wheels, Kumho tires, foam inserts) (2) (2WD front)

5875 Tires & wheels, assembled, glued (SCT satin chrome, beadlock style wheels, SCT off-road racing tires, foam inserts) (2) (2WD front)

5873 Tires & wheels, assembled, glued (SCT satin chrome, beadlock style wheels, SCT off-road racing tires, foam inserts) (2) (4WD front/rear, 2WD rear only) (TSM rated)

5878 Tires & wheels, assembled, glued (SCT satin chrome, black beadlock style wheels, BFGoodrich® Mud-Terrain™ T/A® KM2 tires, foam inserts) (2)(4WD front/rear, 2WD rear only)

5881 Tires & wheels, assembled, glued (SCT satin chrome, black beadlock style wheels, Kumho tires, foam inserts) (2) (2WD front)

5875X Tires & wheels, assembled, glued (SCT satin chrome, black beadlock style wheels, SCT off-road racing tires, foam inserts) (2) (2WD front)

5873X Tires & wheels, assembled, glued (SCT satin chrome, black beadlock style wheels, SCT off-road racing tires, foam inserts) (2) (4WD front/rear, 2WD rear only)

5873A Tires & wheels, assembled, glued (SCT satin chrome, red-beadlock style wheels, SCT off-road tires, foam inserts) (2) (4WD front/rear, 2WD rear only)

6873A Tires & wheels, assembled, glued (SCT Split-Spoke chrome, red beadlock style wheels, BFGoodrich® Mud-Terrain™ T/A® KM2 tires, foam inserts) (2) (4WD f/r, 2WD rear)

5891 Tires & wheels, assembled, glued (SCT Split-Spoke satin chrome, beadlock style wheels, paddle tires, foam inserts) (2) (4WD front/rear, 2WD rear only) (TSM rated)

6873 Tires & wheels, assembled, glued (SCT Split-Spoke satin chrome, black beadlock style wheels, BFGoodrich® Mud-Terrain™ T/A® KM2 tires, foam inserts) (2) (4WD f/r, 2WD rear) (TSM® rated)

6874 Tires & wheels, assembled, glued (SCT Split-Spoke satin chrome, black beadlock style wheels, Kumho tires, foam inserts) (2) (4WD front/rear, 2WD rear only)

5885 Tires & wheels, assembled, glued (SCT Split-Spoke, black, satin chrome beadlock wheels, BFGoodrich® Mud-Terrain™ T/A® KM2 tires, foam inserts) (2) (2WD Front)

5883 Tires & wheels, assembled, glued (SCT Split-Spoke, black, satin chrome beadlock wheels, BFGoodrich® Mud-Terrain™ T/A® KM2 tire, foam inserts) (2) (4WD f/r, 2WD rear)

5877A Tires & wheels, assembled, glued (SCT Split-Spoke, chrome red beadlock style wheels, BFGoodrich® Mud-Terrain™ T/A® KM2 tires, foam inserts) (2) (2WD front)

5877 Tires & wheels, assembled, glued (SCT Split-Spoke, satin chrome, black beadlock wheels, BFGoodrich® Mud-Terrain™ T/A® KM2 tires, foam inserts) (2) (2WD front)

5865 Tires & wheels, assembled, glued (SCT, chrome, green beadlock wheel, BFGoodrich® Mud-Terrain™ T/A® KM2 tire, foam inserts) (2) (2WD front only)

6876 Tires & wheels, assembled, glued (SCT, chrome, green beadlock wheel, BFGoodrich® Mud-Terrain™ T/A® KM2 tire, foam inserts) (2) (4WD front/rear, 2WD rear only)

6871 Tires, BFGoodrich® Mud-Terrain T/A® KM2 (dual profile 4.3x1.7-2.2/3.0") (2)/ foam inserts (2)

6871R Tires, BFGoodrich® Mud-Terrain T/A® KM2 , ultra-soft (S1 off-road racing compound) (dual profile 4.3x1.7- 2.2/3.0") (2)/ foam inserts (2)

6870 Tires, Kumho (dual profile 4.3x1.7- 2.2/3.0") (2)/ foam inserts (2)

6870R Tires, Kumho, ultra-soft (S1 off-road racing compound) (dual profile 4.3x1.7- 2.2/3.0") (2)/ foam inserts (2)

5871 Tires, off-road racing, SCT dual profile 4.3x1.7- 2.2/3.0" (2)/ foam inserts (2)

5871R Tires, ultra-soft, S1 compound for off-road racing, SCT dual profile 4.3x1.7- 2.2/3.0" (2)/ foam inserts (2)

1654 Wheel hubs, hex (rear) (2)/ stub axle pins (2)

3654 Wheel hubs, hex (tall offset, Rustler®/Stampede® front) (2)/ axle pins (2.5x10mm) (2)

5853X Wheel hubs, splined, 17mm, short (2), long (2)/wheel nuts, splined, 17mm (4) (blue-anodized)/ hub retainer M4x0.7 (4)/axle pin (4)/wrench, 5mm

5353 Wheel nuts, splined, 17mm (blue-anodized) (4)

5480X Wheel wrench, splined, 17mm

5870X Wheels, SCT black, orange beadlock style, dual profile (2.2" outer, 3.0" inner) (2WD front) (2)

5868X Wheels, SCT black, orange beadlock style, dual profile (2.2" outer, 3.0" inner) (4WD f/r, 2WD rear) (2)

5870 Wheels, SCT chrome, red beadlock style, dual profile (2.2" outer, 3.0" inner) (2WD front) (2)

5868 Wheels, SCT chrome, red beadlock style, dual profile (2.2" outer, 3.0" inner) (4WD front/rear, 2WD rear only) (2)

5874 Wheels, SCT satin chrome, beadlock style, dual profile (2.2" outer, 3.0" inner) (2WD front)

5872 Wheels, SCT satin chrome, beadlock style, dual profile (2.2" outer, 3.0" inner) (4WD front/rear, 2WD rear only)

5872X Wheels, SCT satin chrome, black beadlock style SCT, dual profile (2.2" outer, 3.0" inner) (4WD front/rear, 2WD rear only) (2)

5874X Wheels, SCT satin chrome, black beadlock style, dual profile (2.2" outer, 3.0" inner) (2WD front) (2)

5874A Wheels, SCT satin chrome, red beadlock style, dual profile (2.2" outer, 3.0" inner) (2WD front) (2)

5872A Wheels, SCT satin chrome, red beadlock style, dual profile (2.2" outer, 3.0" inner) (4WD front/rear, 2WD rear only) (2)

5886A Wheels, SCT Split-Spoke, black, blue beadlock style, dual profile (2.2" outer, 3.0" inner) (2WD front) (2)

5884A Wheels, SCT Split-Spoke, black, blue beadlock style, dual profile (2.2" outer, 3.0" inner) (4WD f/r, 2WD rear) (2)

5886 Wheels, SCT Split-Spoke, black, satin chrome beadlock style, dual profile (2.2" outer, 3.0" inner) (2WD front) (2)

5884 Wheels, SCT Split-Spoke, black, satin chrome beadlock style, dual profile (2.2" outer, 3.0" inner) (4WD f/r, 2WD rear) (2)

6872X Wheels, SCT Split-Spoke, chrome, green beadlock style, dual profile (2.2" outer, 3.0" inner) (4WD front/rear, 2WD rear) (2)

5876A Wheels, SCT Split-Spoke, chrome, red beadlock style, dual profile (2.2" outer, 3.0" inner) (2WD front) (2)

6872A Wheels, SCT Split-Spoke, chrome, red beadlock style, dual profile (2.2" outer, 3.0" inner) (4WD front/rear, 2WD rear) (2)

5876 Wheels, SCT Split-Spoke, satin chrome, black beadlock style, dual profile (2.2" outer, 3.0" inner) (2WD front) (2)

6872 Wheels, SCT Split-Spoke, satin chrome, black beadlock style, dual profile (2.2" outer, 3.0" inner) (4WD front/rear, 2WD rear only) (2)

5866 Wheels, SCT, chrome, green beadlock style, dual profile (2.2" outer, 3.0" inner) (2) (2WD front only)

6875 Wheels, SCT, chrome, green beadlock style, dual profile (2.2" outer, 3.0" inner) (2) (4WD front/rear, 2WD rear only)

Transmission Components

1552 Motor screws (3x8mm hex cap) (6)/washers (6)/ wrench

4607 Ball bearings (5x11x4mm) (8)

5116 Ball bearings, blue rubber sealed (5x11x4mm) (2)

3792 Cover, gear/ rubber gear cover plug/ 3x6 RM (2)

3790 Gear adapter, fixed

3691 Gearbox halves (l&r) (black) w/ idler gear shaft

3691A Gearbox halves (l&r) (grey) w/ idler gear shaft

5148 Grease, white lithium

3696 Idler gear, steel (30-tooth)

3793 Input shaft (slipper shaft) / spring pin

2381X Main diff with steel ring gear/ side cover plate/ screws (Bandit, Stampede®, Rustler®)

2382 Planet gears (4)/ planet shafts (4)/ sun gears (2)/sun gear alignment shaft (1) all hardened steel

2388X Planetary gear differential with steel ring gear (complete) (fits Bandit, Stampede®, Rustler®)

5552X Rebuild kit, slipper clutch (steel disc/ friction pads (3)/ spring (2)/ pin/ 4.0mm NL (1)/ 5.0mm NL (1))

2554 Screws, 3x6mm cap-head machine (hex drive) (6)

3931 Screws, 3x8mm flat-head machine (hex drive) (6)

1647 Silicone grease

5556 Slipper pressure plate & hub (aluminum alloy)

3195 Top drive gear, steel (22-tooth)

BFGoodrich® Tires Trademarks are used under license from Michelin Group Companies.

Questions? Call toll-free, 1-888-TRAXXAS

SLASH KIT™ (58014-4)

Traxxas Tools

3433X	Body reamer (aluminum handle)
3433	Body reamer (plastic handle)
3436	Cap, body reamer
3432	Scissors, curved tip
3431	Scissors, straight tip
8712	Speed Bit Essentials Set, hex and nut driver, 7-piece, includes premium handle (medium), travel pouch, hex drivers (straight: 1.5mm, 2.0mm, 2.5mm) and nut drivers (5.0mm, 5.5mm, 7.0mm, and 8.0mm), 1/4” drive
8721	Speed bit handle, medium (one piece)
8720	Speed bit handle, premium, large (rubber overmold)
8722	Speed bit handle, premium, medium (rubber overmold)
8710	Speed Bit Master Set, hex and nut driver, 13-piece, includes premium handle (medium), travel pouch, hex drivers (straight: 1.5mm, 2.0mm, 2.5mm, 3.0mm), (ball-end: 2.0mm, 2.5mm, 3.0mm), and nut drivers (4.00mm, 4.50mm, 5.00mm, 5.50mm, 7.00mm, 8.00mm),
8711	Speed Bit Master Set, hex driver, 7-piece straight and ball end, includes premium handle (medium), travel pouch, hex drivers (straight: 1.5mm, 2.0mm, 2.5mm, 3.0mm) (ball end: 2.0mm, 2.5mm, 3.0mm), 1/4" drive
8719	Speed Bit Master Set, nut driver, 6-piece, includes premium handle (medium), travel pouch, and nut drivers (4.0mm, 4.5mm, 5.0mm, 5.5mm, 7.0mm, 8.0mm), 1/4" drive
8716	Speed Bit Set, hex driver, 2-piece ball-end (2.0mm, 2.5mm), 1/4" drive
8716X	Speed Bit Set, hex driver, 3-piece ball-end (2.0mm, 2.5mm, 3.0mm), 1/4" drive
8715	Speed Bit Set, hex driver, 3-piece straight (1.5mm, 2.0mm, 2.5mm), 1/4" drive
8715X	Speed Bit Set, hex driver, 4-piece straight (1.5mm, 2.0mm, 2.5mm, 3.0mm), 1/4" drive
3415	Tool set with pouch (includes 1.5mm, 2.0mm, 2.5mm, 3.0mm, 3.5mm, 4mm drivers/ 4mm, 5mm, 5.5mm, 7mm and 8mm nut drivers/ 2mm, 4mm, and 5mm slotted screwdrivers/ #00 Phillips, #0 Phillips, and #1 Phillips screwdrivers/ 4mm and 8mm wrench/ driver handle

Turnbuckles & Threaded Rods

3643X	Camber links, front (TUBES blue-anodized, 7075-T6 aluminum, stronger than titanium) (83mm) (2)/ rod ends (4)/ aluminum wrench (1) (#2579 3x15 BCS (4) required for installation)
3643G	Camber links, front (TUBES green-anodized, 7075-T6 aluminum, stronger than titanium) (83mm) (2)/ rod ends (4)/ aluminum wrench (1) (#2579 3x15 BCS (4) required for installation)
3643R	Camber links, front (TUBES red-anodized, 7075-T6 aluminum, stronger than titanium) (83mm) (2)/ rod ends (4)/ aluminum wrench (1) (#2579 3x15 BCS (4) required for installation)
3644X	Camber links, rear (TUBES blue-anodized, 7075-T6 aluminum, stronger than titanium) (73mm) (2)/ rod ends (4)/ aluminum wrench (1) (#2579 3x15 BCS (4) required for installation)
3644G	Camber links, rear (TUBES green-anodized 7075-T6 aluminum, stronger than titanium) (73mm) (2)/ rod ends (4)/ aluminum wrench (1) (#2579 3x15 BCS (4) required for installation)
3644R	Camber links, rear (TUBES red-anodized, 7075-T6 aluminum, stronger than titanium) (73mm) (2)/ rod ends (4)/ aluminum wrench (1) (#2579 3x15 BCS (4) required for installation)
5525	Rod ends (12)/ hollow balls (12)
5347	Rod ends, Revo® (large) with hollow balls (12)
3737A	Turnbuckle, aluminum (blue-anodized), 39mm (1)(assembled w/rod ends)/hollow balls (2) (fits front & rear on Slash)
3737	Turnbuckle, aluminum (red-anodized), 39mm (1) (assembled w/rod ends)/hollow balls (2) (fits front & rear on Slash)
3741A	Turnbuckles, aluminum (blue-anodized), camber links, front, 39mm (2), rear, 49mm (2) (assembled w/rod ends & hollow balls)/ wrench
3139A	Turnbuckles, aluminum (blue-anodized), toe links, 59mm (2) (assembled w/ rod ends & hollow balls) (requires 5mm aluminum wrench #5477)
3741X	Turnbuckles, aluminum (red-anodized), camber links, front, 39mm (2), rear, 49mm (2) (assembled w/ rod ends & hollow balls)/wrench
3139X	Turnbuckles, aluminum (red-anodized), toe links, 59mm (2) (assembled with rod ends & hollow balls) (requires 5mm aluminum wrench #5477)
3644	Turnbuckles, camber link, 39mm (69mm center to center) (assembled with rod ends and hollow balls) (1 left, 1 right) (fits front & rear on Slash)
3745	Turnbuckles, toe link, 59mm (78mm center to center) (2) (assembled with rod ends and hollow balls)

If you have questions or need technical assistance, call Traxxas at:

1-888-TRAXXAS

(1-888-872-9927) (U.S. residents only)

For orders, calls outside the U.S., and other information, call 972-549-3000, or fax to 972-549-3011 e-mail Traxxas at support@Traxxas.com

TRAXXAS.COM

BFGoodrich® Tires Trademarks are used under license from Michelin Group Companies.

REV. 201002 1247

SLASH

MODEL 58024

ELECTRIC POWERED
2WD RACING TRUCK

30+ mph



BRUSHLESS READY METAL GEAR MAGNUM 272™ TRANSMISSION



WATERPROOF XL-5 ESC AND TITAN 12T MOTOR



TQ 2.4GHz 2-CHANNEL TRANSMITTER

AWARD WINNING SHORT-COURSE PERFORMANCE & FUN!

Slash is the short-course truck that started it all, and now you can offer your customers genuine Slash toughness and fun in its original configuration and price —and we've even added some choice upgrades! All the original features that made Slash the number-one short-course truck return in a Ready-To-Race® package with the proven TQ 2.4GHz radio system. Battery and charger are sold separately. The latest 4X4 style body with original Slash graphics is included, and our new, officially-licensed Kumho Road Venture MT tires are mounted to satin-chrome SCT wheels. Slash is now LiPO-ready, with built-in Low Voltage Detection!

Front Assembly

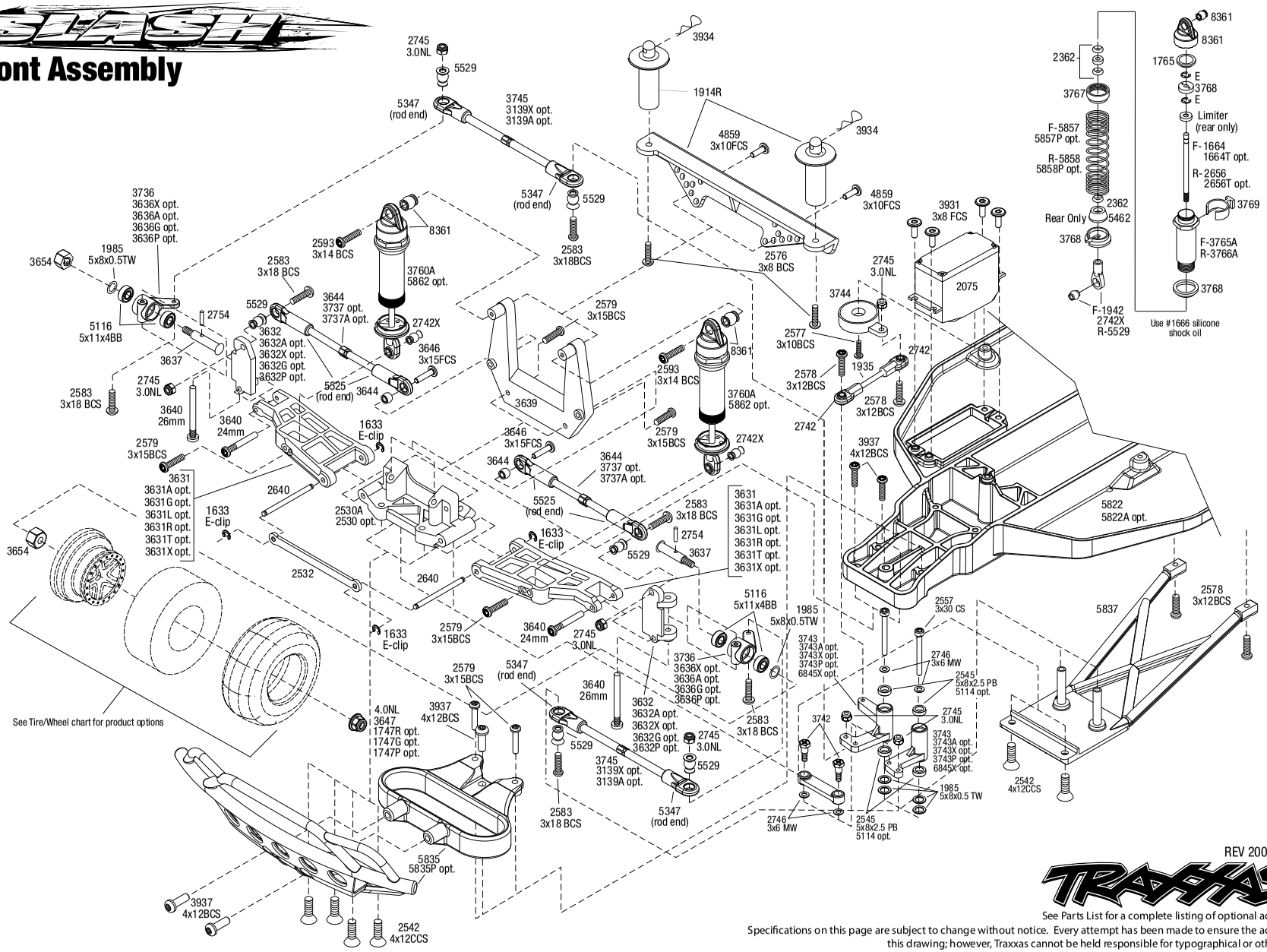

REV 200914-R13

See Parts List for a complete listing of optional accessories.

Specifications on this page are subject to change without notice. Every attempt has been made to ensure the accuracy of this drawing; however, Traxxas cannot be held responsible for typographical or other errors.

SLASH™ (58024)

Chassis Assembly

Specifications on this page are subject to change without notice. Every attempt has been made to ensure the accuracy of this drawing; however, Traxxas cannot be held responsible for typographical or other errors.

See Parts List for a complete listing of optional accessories.

Questions? **Call toll-free, 1-888-TRAXXAS**

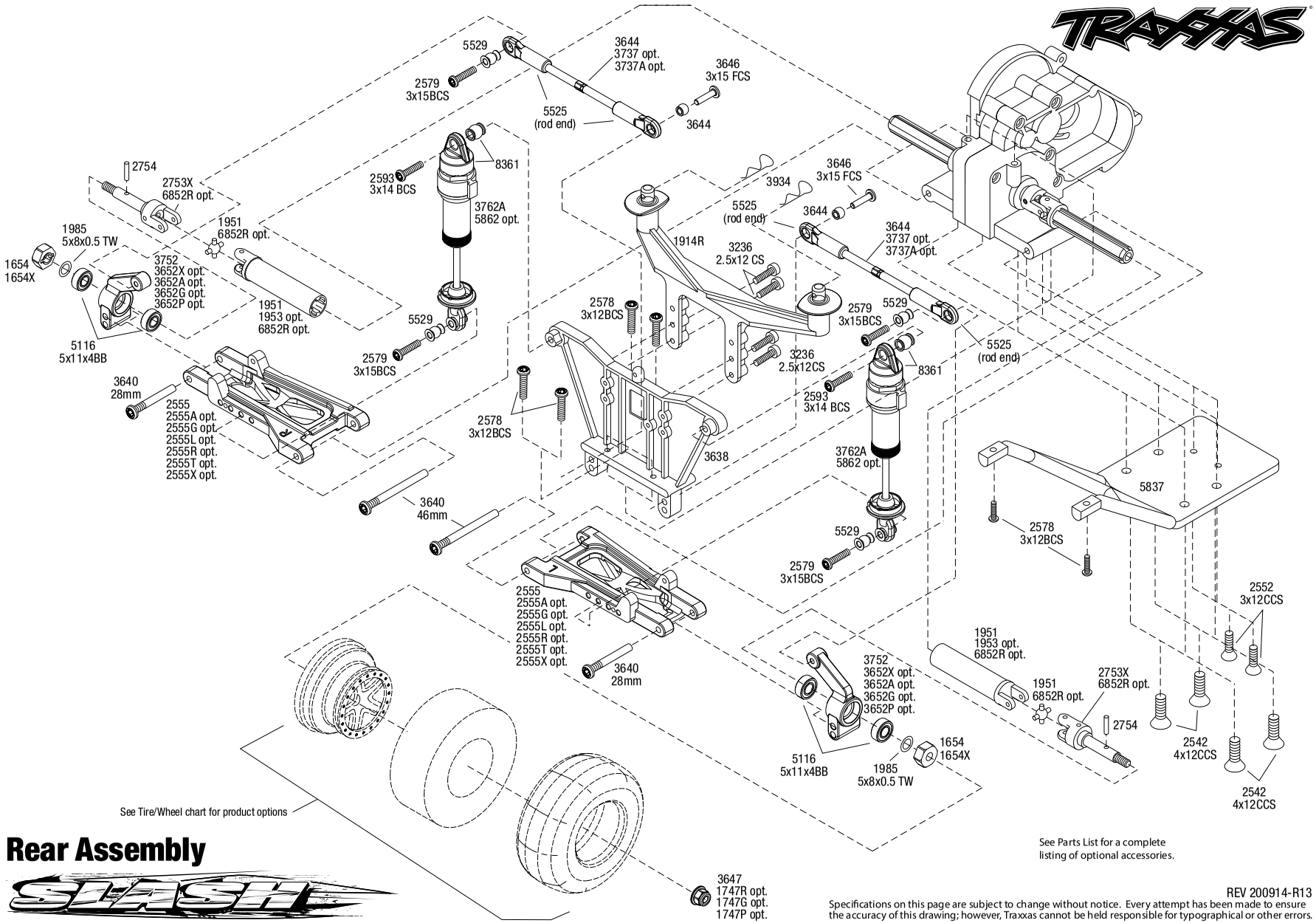

Rear Assembly

See Parts List for a complete listing of optional accessories.

REV 200914-R13

Specifications on this page are subject to change without notice. Every attempt has been made to ensure the accuracy of this drawing; however, Traxxas cannot be held responsible for typographical or other errors.

SLASH

Transmission Assembly

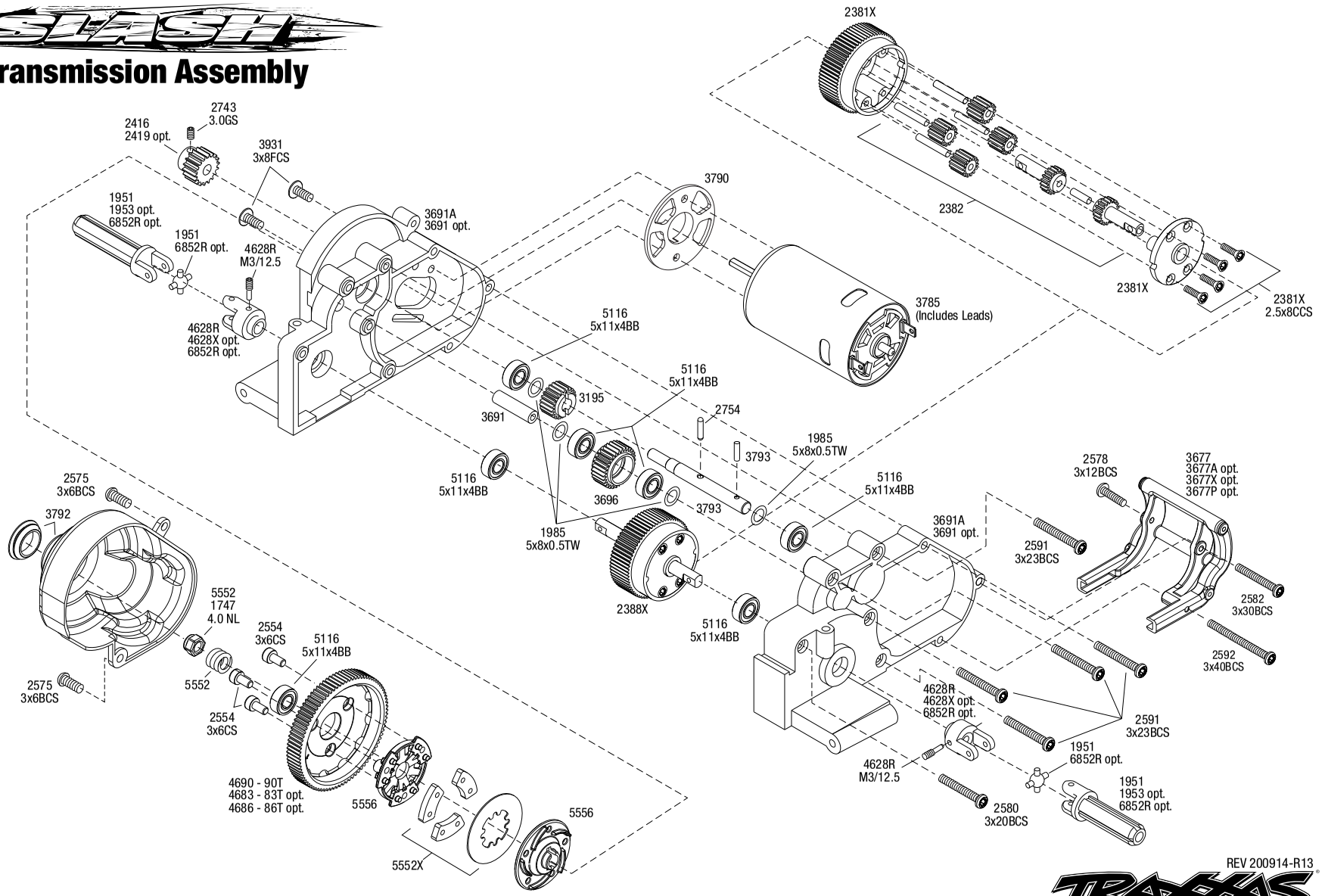

REV 200914-R13

TRAXXAS

See Parts List for a complete listing of optional accessories.

Specifications on this page are subject to change without notice. Every attempt has been made to ensure the accuracy of this drawing; however, Traxxas cannot be held responsible for typographical or other errors.

PARTS SHOWN IN BOLD ARE OPTIONAL ACCESSORIES.

Part categories and individual part listings are arranged alphabetically.

Bearings & Bushings

4607 **Ball bearings (5x11x4mm) (8)**
2728 **Ball bearings (5x8x2.5mm) (2)**
5116 Ball bearings, blue rubber sealed (5x11x4mm) (2)
5114 **Ball bearings, blue rubber sealed (5x8x2.5mm) (2)**
2545 Bellcrank bushings (plastic) (5x8x2.5mm) (4)
1675 **Bushings, self-lubricating (5x11x4mm) (14)**
1985 PTFE-coated washers, 5x8x0.5mm (20) (use with ball bearings)

Body & Accessories

1926 **Antenna caps, vinyl (2)/ antenna spool**
1726 Antenna, tube (1)/ vinyl antenna cap (1)/ wire retainer (1)
3935 Body clip (mounting clip), angled, 90-degrees (10)
3935A **Body clip (mounting clip), angled, 90-degrees (black) (10)**
3934 Body clips, heavy duty (12)
1914R Body mount, front & rear (black)/ body posts, 52mm (2), 38mm (2), 25mm (2), 6.5mm (2)/ body post extensions (4)/ hardware
1815 Body washers (8)
6716 **Body washers, foam, 2mm (2)/ 3mm (2)/ 4mm (4)**
6811 **Body, Slash 4X4 (clear, requires painting)/ window masks/ decal sheet**
6811R **Body, Slash 4X4, heavy duty (clear, untrimmed, requires painting)/ window masks/ decal sheet**
6811X Body, Slash 4X4, ProGraphix (Graphics are printed, requires paint & final color application)/ decal sheet
6849 **Body, Slash 4X4/Slash, Fox Edition (painted, decals applied)**
2514 **Decal sheet, racing sponsors**
5813 **Decal Sheet, Slash**
9950 **Official Team Traxxas® racing decal set (flag logo/ 6-color)**
5846 **Paint masks, body**

Chassis & Attachments

5526 Antenna crimp nut, aluminum (blue-anodized)/ antenna nut tools
5526R **Antenna crimp nut, aluminum (red-anodized)/ antenna nut tools**
1914R Body mount, front & rear (black)/ body posts, 52mm (2), 38mm (2), 25mm (2), 6.5mm (2)/ body post extensions (4)/ hardware
5624 Box, receiver (sealed)/ foam pad/ silicone grease/ 3x8mm BCS (2)/ 2.5x8mm CS (2)/ 3x6mm BCS (2)
5835 Bumper, front/ bumper mount, front (black)
5835P **Bumper, front/ bumper mount, front (pink)**
5836 Bumper, rear/ bumper mount, rear (black)
5836P **Bumper, rear/ bumper mount, rear (pink)**
5830 **Chassis conversion kit, low CG (Slash)**
5832 **Chassis, low CG (black)**
5832A **Chassis, low CG (blue)**
5832G **Chassis, low CG (grey)**
5822 Chassis, Slash
5822A **Chassis, Slash (black)**
5827 Hold down, battery/ hold down retainer/ battery post/ foam spacer/ angled body clip
5827X **Hold down, battery/ hold down retainer/ battery post/ foam spacer/ angled body clip (allows for installation of taller, multi-cell batteries)**
5831 **Lower chassis, low CG (black)**
5831A **Lower chassis, low CG (blue)**
5831G **Lower chassis, low CG (grey)**
5823 Nerf bars, chassis (black)
5833 **Nerf bars, low CG (black)**
5833A **Nerf bars, low CG (blue)**
5833G **Nerf bars, low CG (grey)**
5625 Seal kit, receiver box (includes o-ring, seals, and silicone grease)
5837 Skidplates, front & rear (black)
5185 **Tires, rubber (2) (fits Traxxas® wheelie bar wheels)**
4974 **Wheelie bar arm (1)/ connector (1)/ 3x12 SS (hex drive) (4)**
3677A **Wheelie bar mount (1) / hardware (green)**
3677P **Wheelie bar mount (1) / hardware (pink)**
3677 Wheelie bar mount (1)/ hardware (black)
3677X **Wheelie bar mount (1)/ hardware (blue)**
3678 **Wheelie bar, assembled (black) (fits Slash, Bandit, Rustler®, Stampede® series)**
3678X **Wheelie bar, assembled (blue) (fits Slash, Bandit, Rustler®, Stampede® series)**
3678A **Wheelie bar, assembled (green) (fits Slash, Bandit, Rustler®, Stampede® series)**
3678P **Wheelie bar, assembled (pink) (fits Slash, Bandit, Rustler®, Stampede® series)**
4976 **Wheels (4)/ axles (2) (for T-Maxx®/E-Maxx wheelie bar)**
5186A **Wheels, aluminum (blue-anodized) (2)/ 5x8mm ball bearings (4)/ axles (2)/ rubber tires (2)**
5186 **Wheels, aluminum (red-anodized) (2)/ 5x8mm ball bearings (4)/ axles (2)/ rubber tires (2)**

Differential Components

2381X Main diff with steel ring gear/ side cover plate/ screws (Bandit, Stampede®, Rustler®)
2382 Planet gears (4)/ planet shafts (4)/ sun gears (2)/sun gear alignment shaft (1) all hardened steel
2388X Planetary gear differential with steel ring gear (complete) (fits Bandit, Stampede®, Rustler®)
5169 Screws, 2.6x8mm countersunk machine (6)
1647 Silicone grease

Driveline Components

5116 Ball bearings, blue rubber sealed (5x11x4mm) (2)
9059X **Cross pin (2)/ drive pin (2) (repairs 2 axle shafts)**
9057X **Differential output shafts, steel-splined constant-velocity (2)**
4628R Differential output yokes, black (2)/ 3x5mm countersunk screws (2)/ screw pin (2)
4628X **Differential output yokes, hardened steel (w/ U-joints) (2)**
6828X **Differential output yokes, heavy duty (2)/ screw pin (2)**
6852X **Driveshaft assembly, rear, heavy duty (1) (left or right) (fully assembled, ready to install)/ screw pin (1)**
6852R **Driveshafts, rear, steel-spline constant-velocity (complete assembly) (2)**
9052X **Driveshafts, rear, steel-spline constant-velocity (complete assembly) (2)**
1953 **Half shaft pro-pack (internal-splined (6)/ external-splined (6) (plastic shafts only)**
9055X **Half shaft, external splined (steel-spline constant velocity) (1)**
9056X **Half shaft, internal splined (steel-spline constant velocity) (1)**
6850X **Half shafts, heavy duty (external splined (2)/ internal splined (2))/ metal u-joints (4)**
1951 Half shafts, long truck (external-splined (2) & internal-splined (2)/ metal U-joints (4)
9058X **Rebuild kit, steel-splined constant-velocity driveshafts (includes pins, lube, and hardware for two axle shafts)**
3752 Stub axle carriers (2) (requires 5x11x4mm bearings)
3652A **Stub axle carriers, Rustler®/Stampede®/Bandit (2), 6061-T6 aluminum (blue-anodized)/ 5x11mm ball bearings (4)**
3652G **Stub axle carriers, Rustler®/Stampede®/Bandit (2), 6061-T6 aluminum (green-anodized)/ 5x11mm ball bearings (4)**
3652P **Stub axle carriers, Rustler®/Stampede®/Bandit (2), 6061-T6 aluminum (pink-anodized)/ 5x11mm ball bearings (4)**
3652P **Stub axle carriers, Rustler®/Stampede®/Bandit (2), 6061-T6 aluminum (pink-anodized)/ 5x11mm ball bearings (4)**
3652X **Stub axle carriers, Rustler®/Stampede®/Bandit (2), 6061-T6 aluminum (red-anodized)/ 5x11mm ball bearings (4)**
2754 Stub axle pins (4)
9053X **Stub axle, rear, steel-splined constant velocity (1)**
2753X Stub axles, rear (2)
6853X **Stub axles, rear, heavy duty (2)/pins (2)**

Front Suspension & Steering

3637 Axles (front) (2)
2728 **Ball bearings (5x8x2.5mm) (2)**
5116 Ball bearings, blue rubber sealed (5x11x4mm) (2)
2545 Bellcrank bushings (plastic) (5x8x2.5mm) (4)
2530 **Bulkhead (front) (black)**
2530A Bulkhead (front) (grey)
3643X **Camber links, front (TUBES blue-anodized, 7075-T6 aluminum, stronger than titanium) (83mm) (2)/ rod ends (4)/ aluminum wrench (1) (#2579 3x15 BCS (4) required for installation)**
3643G **Camber links, front (TUBES green-anodized, 7075-T6 aluminum, stronger than titanium) (83mm) (2)/ rod ends (4)/ aluminum wrench (1) (#2579 3x15 BCS (4) required for installation)**
3643R **Camber links, front (TUBES red-anodized, 7075-T6 aluminum, stronger than titanium) (83mm) (2)/ rod ends (4)/ aluminum wrench (1) (#2579 3x15 BCS (4) required for installation)**
3632 Caster blocks (l&r) (30-degree)
3632A **Caster blocks, 30-degree, blue-anodized 6061-T6 aluminum (left & right)/ suspension screw pin (2)**
3632G **Caster blocks, 30-degree, green-anodized 6061-T6 aluminum (left & right)/ suspension screw pin (2)**
3632P **Caster blocks, 30-degree, pink-anodized 6061-T6 aluminum (left & right)/ suspension screw pin (2)**

SLASH™ (58024)

3632X	**Caster blocks, 30-degree, red-anodized 6061-T6 aluminum (left & right)/ suspension screw pin (2)**
5347	Rod ends, Revo® (large) with hollow balls (12)
3646	Screws, 3x15mm flat-head machine (hex drive) (6)
3744	Servo saver w/adapters
3639	Shock tower (front)
3743	Steering bellcranks (l&r)/ draglink
3743A	**Steering bellcranks, drag link (blue-anodized 6061-T6 aluminum)/ 5x8mm ball bearings (4)/ hardware (assembled)**
3743G	**Steering bellcranks, drag link (green-anodized 6061-T6 aluminum)/ 5x8mm ball bearings (4)/ hardware (assembled)**
3743P	**Steering bellcranks, drag link (pink-anodized 6061-T6 aluminum)/ 5x8mm ball bearings (4)/ hardware (assembled)**
3743X	**Steering bellcranks, drag link (red-anodized 6061-T6 aluminum)/ 5x8mm ball bearings (4)/ hardware (assembled)**
6845X	**Steering bellcranks/ servo saver/ servo saver spring/ servo spring retainer/servo horn, steering**
3736	Steering blocks, left & right (2) (requires 5x11x4mm bearings)
3636A	**Steering blocks, Rustler®/Stampede®/Bandit (2), 6061-T6 aluminum (blue-anodized)/ 5x11mm ball bearings (4)**
3636G	**Steering blocks, Rustler®/Stampede®/Bandit (2), 6061-T6 aluminum (green-anodized)/ 5x11mm ball bearings (4)**
3636P	**Steering blocks, Rustler®/Stampede®/Bandit (2), 6061-T6 aluminum (pink-anodized)/ 5x11mm ball bearings (4)**
3636X	**Steering blocks, Rustler®/Stampede®/Bandit (2), 6061-T6 aluminum (red-anodized)/ 5x11mm ball bearings (4)**
3631	Suspension arms (front) (2)
3631X	**Suspension arms, black, front, heavy duty (2)**
3631A	**Suspension arms, blue, front, heavy duty (2)**
3631G	**Suspension arms, green, front, heavy duty (2)**
3631T	**Suspension arms, orange, front, heavy duty (2)**
3631R	**Suspension arms, red, front, heavy duty (2)**
3631L	**Suspension arms, white, front, heavy duty (2)**
2640	Suspension pins, 44mm (2) w/ e-clips
3640	Suspension screw pin set, steel (hex drive) (requires part #2640 for a complete suspension pin set) (Bandit, Rustler®, Stampede®)
2532	Tie bar, fiberglass
1935	Turnbuckles, 36mm (2)
3139A	**Turnbuckles, aluminum (blue-anodized), toe links, 59mm (2) (assembled w/ rod ends & hollow balls) (requires 5mm aluminum wrench #5477)**
3139X	**Turnbuckles, aluminum (red-anodized), toe links, 59mm (2) (assembled with rod ends & hollow balls) (requires 5mm aluminum wrench #5477)**
3644	Turnbuckles, camber link, 39mm (69mm center to center) (assembled with rod ends and hollow balls) (1 left, 1 right) (fits front & rear on Slash)
3745	Turnbuckles, toe link, 59mm (78mm center to center) (2) (assembled with rod ends and hollow balls)

Hardware

1926	**Antenna caps, vinyl (2)/ antenna spool**
1726	Antenna, tube (1)/ vinyl antenna cap (1)/ wire retainer (1)
3935	Body clip (mounting clip), angled, 90-degrees (10)
3935A	**Body clip (mounting clip), angled, 90-degrees (black) (10)**
3934	Body clips, heavy duty (12)
1589	Double-sided adhesive tape (25mm x 25mm) (2)
1633	E-clips/ C-rings
2586	Screws, 3x15mm cap-head machine (hex drive) (6)
2745	Nuts, 3mm nylon locking (12)
3647	Nuts, 4mm flanged nylon locking (steel, serrated) (8)
1747	Nuts, 4mm nylon locking (10)
1747R	**Nuts, aluminum, flanged, serrated (4mm) (blue-anodized) (4)**
1747G	**Nuts, aluminum, flanged, serrated (4mm) (green-anodized) (4)**
1747P	**Nuts, aluminum, flanged, serrated (4mm) (pink-anodized) (4)**
1747P	**Nuts, aluminum, flanged, serrated (4mm) (pink-anodized) (4)**
1747A	**Nuts, aluminum, flanged, serrated (4mm) (red-anodized) (4)**
1985	PTFE-coated washers, 5x8x0.5mm (20) (use with ball bearings)
5525	Rod ends (12)/ hollow balls (12)
5347	Rod ends, Revo® (large) with hollow balls (12)
2742X	Rod ends, short (6)/ hollow balls (6)
3215	Screws, 2.5x6mm cap-head machine (hex drive) (6)
3965	Screws, 2.5x8mm cap-head machine (6)
2577	Screws, 3x10mm button-head machine (hex drive) (6)
4859	Screws, 3x10mm flat-head machine (hex drive) (4)
2578	Screws, 3x12mm button-head machine (hex drive) (6)
2552	Screws, 3x12mm countersunk machine (6) (hex drive)
2579	Screws, 3x15mm button-head machine (hex drive) (6)
3646	Screws, 3x15mm flat-head machine (hex drive) (6)
2583	Screws, 3x18mm button-head machine (hex drive) (6)
2580	Screws, 3x20mm button-head machine (hex drive) (6)
2591	Screws, 3x23mm button-head machine (hex drive) (6)
2582	Screws, 3x30mm button-head machine (hex drive) (6)
2592	Screws, 3x40mm button-head machine (hex drive) (6)
2575	Screws, 3x6mm button-head machine (hex drive) (6)
3932	Screws, 3x6mm flat-head machine (hex drive) (6)
2576	Screws, 3x8mm button-head machine (hex drive) (6)
3931	Screws, 3x8mm flat-head machine (hex drive) (6)
3937	Screws, 4x12mm button-head machine (hex drive) (6)
2542	Screws, 4x12mm countersunk machine (hex drive) (6)
2546	Screws, 4x15mm countersunk machine (hex drive) (6)
2743	Set (grub) screws, 3mm hardened (12)
5529	Shim set, 3x7x1mm (2), 3x6x0.5mm (4), 3x7x2mm (2)/ hollow balls, captured (4)
3742	Shoulder screws, steering bellcranks (3x30mm cap-head machine) (2)/ draglink shoulder screws (chrome) (2)
3642X	**Shoulder screws, Ultra Shocks (3x12 hex drive) (6)**
2754	Stub axle pins (4)
2746	**Washers, 3x6mm metal (12)**

Motors & Electronics

1726	Antenna, tube (1)/ vinyl antenna cap (1)/ wire retainer (1)
2260	**BEC assembly (complete)**
3790	Gear adapter, fixed
2072A	Gear set (for 2070, 2075 servos)
2252	**Gear set, metal (for 2250, 2255 servos)**
3785	Motor, Titan® 12T (12-Turn, 550 size)
3351R	**Motor, Velineon® 3500, brushless (assembled with 12-gauge wire and gold-plated bullet connectors)**
3931	Screws, 3x8mm flat-head machine (hex drive) (6)
2254	**Servo case, aluminum (blue-anodized) (middle) (for 2250 servo)**
2253	**Servo case, aluminum (red-anodized) (middle) (for 2255 servo)**
2251	**Servo case, plastic (top, middle, bottom)/ gaskets/ hardware (for 2250, 2255 servos)**
2074	Servo case/gaskets (for 2056 and 2075 waterproof servos)
2075R	**Servo, digital high-speed, metal gear (ball bearing), waterproof**
2075	Servo, digital high-torque (ball bearing), waterproof
2250	**Servo, digital high-torque 330 coreless, metal gear (ball bearing), waterproof**
2255	**Servo, digital high-torque 400 brushless, metal gear (ball bearing), waterproof**
2075X	**Servo, digital high-torque, metal gear (ball bearing), waterproof**
3350R	**Velineon® VXL-3s Brushless Power System, waterproof (includes VXL-3s waterproof ESC, Velineon 3500 motor, and speed control mounting plate (part #3725R))**
3355R	**Velineon® VXL-3s Electronic Speed Control, waterproof (brushless) (fwd/rev/brake)**
3018R	XL-5 Electronic Speed Control, waterproof (land version, low-voltage detection, fwd/rev/brake)

Radio System, Batteries & Chargers

2842X	**5000mAh 7.4v 2-Cell 25C LiPo Battery**
2843X	**5800mAh 7.4v 2-Cell 25C LiPo Battery**
2869X	**7600mAh 7.4v 2-Cell 25C LiPo Battery**
5526	Antenna crimp nut, aluminum (blue-anodized)/ antenna nut tools
5526R	**Antenna crimp nut, aluminum (red-anodized)/ antenna nut tools**
2943	**Battery charge indicators (green (4), blue (4), grey (4))**
6548	Battery door, transmitter (replacement for #6516, 6517, 6528, 6529, 6530 transmitters)
2923X	**Battery, Power Cell, 3000mAh (NiMH, 7-C flat, 8.4V)**
2926X	**Battery, Power Cell, 3000mAh (NiMH, 7-C hump, 8.4V)**
2940X	**Battery, Series 3 Power Cell, 3300mAh (NiMH, 7-C flat, 8.4V)**
2941X	**Battery, Series 3 Power Cell, 3300mAh (NiMH, 7-C hump, 8.4V)**
2950X	**Battery, Series 4 Power Cell, 4200mAh (NiMH, 7-C flat, 8.4V)**
2951X	**Battery, Series 4 Power Cell, 4200mAh (NiMH, 7-C hump, 8.4V)**
2960X	**Battery, Series 5 Power Cell, 5000mAh (NiMH, 7-C flat, 8.4V)**
2961X	**Battery, Series 5 Power Cell, 5000mAh (NiMH, 7-C hump, 8.4V)**
2983	**Battery/charger completer pack (includes #2969 2-amp NiMH peak detecting AC charger (1), #2923X 3000mAh 8.4V 7-cell NiMH battery (1))**
2260	**BEC assembly (complete)**
2975	**Charger, DC, 4 amp (6 - 7 cell, 7.2 - 8.4 volt, NiMH)**
2972	**Charger, EZ-Peak® Dual, 100W, NiMH/LiPo with iD® Auto Battery Identification**
2973	**Charger, EZ-Peak® Live Dual, 200W, NiMH/LiPo with iD® Auto Battery Identification**
2971	**Charger, EZ-Peak® Live, 100W, NiMH/LiPo with iD® Auto Battery Identification**
2970	**Charger, EZ-Peak® Plus, 4 amp, NiMH/LiPo with iD® Auto Battery Identification**
6541	**Connector, power tap (with cable) (long)/ wire tie**
2978	**Fuse, charger, 5A (2) (for #2974, 2975, 2977)**
2072A	Gear set (for 2070, 2075 servos)
2252	**Gear set, metal (for 2250, 2255 servos)**

BFGoodrich® Tires Trademarks are used under license from Michelin Group Companies.

2968X	**LiPo cell voltage checker/balancer (includes #2938X adapter for Traxxas® iD® batteries)**
2968	**LiPo cell voltage checker/balancer (requires #2938X adapter for Traxxas® iD® batteries)**
6554	**Mount, telemetry expander (fits Bandit, Rustler®, Slash 2WD)**
6535	**Mount, temperature sensor (electric motors)/ wire tie/ thermal pad**
6519	Receiver, micro, TQ 2.4GHz (3-channel)
6518	**Receiver, micro, TQi 2.4GHz with telemetry (5-channel)**
6526	**Sensor, auto-detectable, temperature**
6527	**Sensor, auto-detectable, voltage**
6520	**Sensor, RPM (long)/ 3x4mm BCS (2)/ 3x4 GS (1)**
6521	**Sensor, temperature and voltage (long)**
2254	**Servo case, aluminum (blue-anodized) (middle) (for 2250 servo)**
2253	**Servo case, aluminum (red-anodized) (middle) (for 2255 servo)**
2251	**Servo case, plastic (top, middle, bottom)/ gaskets/ hardware (for 2250, 2255 servos)**
2074	Servo case/gaskets (for 2056 and 2075 waterproof servos)
2075R	**Servo, digital high-speed, metal gear (ball bearing), waterproof**
2075	Servo, digital high-torque (ball bearing), waterproof
2250	**Servo, digital high-torque 330 coreless, metal gear (ball bearing), waterproof**
2255	**Servo, digital high-torque 400 brushless, metal gear (ball bearing), waterproof**
2075X	**Servo, digital high-torque, metal gear (ball bearing), waterproof**
6553X	**Telemetry expander 2.0 and GPS module 2.0, TQi radio system**
6550X	**Telemetry expander 2.0, TQi radio system (for use only with #6551X GPS module)**
6551X	**Telemetry GPS module 2.0, TQi radio system (for use only with #6550X telemetry expander)**
6538	**Telemetry trigger magnet holders, spur gear/ magnet, 5x2mm (1)/ 3x8mm CCS (3)/ 3x10mm CCS (3)**
6540	**Telemetry trigger magnet, 5X2mm (1)**
6509R	**TQi 2.4 GHz High Output radio system, 2-channel, Traxxas Link™ enabled, TSM (2-ch transmitter, 5-ch micro receiver)**
6507R	**TQi 2.4 GHz High Output radio system, 4-channel with Traxxas Link™ Wireless Module, TSM (4-ch transmitter, 5-ch micro receiver)**
6516	Transmitter, TQ 2.4GHz, 2-channel (transmitter only)
6528	**Transmitter, TQi Traxxas Link™ enabled, 2.4GHz high output, 2-channel (transmitter only)**
6529	**Transmitter, TQi Traxxas Link™ enabled, 2.4GHz high output, 3-channel (transmitter only)**
6530	**Transmitter, TQi Traxxas Link™ enabled, 2.4GHz high output, 4-channel (transmitter only)**
6511	**Traxxas Link™ Wireless Module**
3355R	**Velineon® VXL-3s Electronic Speed Control, waterproof (brushless) (fwd/rev/brake)**
6537	**Wire retainers, gear cover/ 3x4mm BCS (2)**
3018R	XL-5 Electronic Speed Control, waterproof (land version, low-voltage detection, fwd/rev/brake)

Ready-To-Race Model

58024	Slash: 1/10-Scale 2WD Short Course Racing Truck with TQ 2.4GHz radio system

Rear Suspension

5116	Ball bearings, blue rubber sealed (5x11x4mm) (2)
3644X	**Camber links, rear (TUBES blue-anodized, 7075-T6 aluminum, stronger than titanium) (73mm) (2)/ rod ends (4)/ aluminum wrench (1) (#2579 3x15 BCS (4) required for installation)**
3644G	**Camber links, rear (TUBES green-anodized 7075-T6 aluminum, stronger than titanium) (73mm) (2)/ rod ends (4)/ aluminum wrench (1) (#2579 3x15 BCS (4) required for installation)**
3644R	**Camber links, rear (TUBES red-anodized, 7075-T6 aluminum, stronger than titanium) (73mm) (2)/ rod ends (4)/ aluminum wrench (1) (#2579 3x15 BCS (4) required for installation)**
1951	Half shafts, long truck (external-splined (2) & internal-splined (2)/ metal U-joints (4)
3638	Shock tower (rear)
3752	Stub axle carriers (2) (requires 5x11x4mm bearings)
3652A	**Stub axle carriers, Rustler®/Stampede®/Bandit (2), 6061-T6 aluminum (blue-anodized)/ 5x11mm ball bearings (4)**
3652G	**Stub axle carriers, Rustler®/Stampede®/Bandit (2), 6061-T6 aluminum (green-anodized)/ 5x11mm ball bearings (4)**
3652P	**Stub axle carriers, Rustler®/Stampede®/Bandit (2), 6061-T6 aluminum (pink-anodized)/ 5x11mm ball bearings (4)**
3652P	**Stub axle carriers, Rustler®/Stampede®/Bandit (2), 6061-T6 aluminum (pink-anodized)/ 5x11mm ball bearings (4)**
3652X	**Stub axle carriers, Rustler®/Stampede®/Bandit (2), 6061-T6 aluminum (red-anodized)/ 5x11mm ball bearings (4)**
2753X	Stub axles, rear (2)
2555	Suspension arms, (rear) (2)
2555X	**Suspension arms, black, rear, heavy duty (2)**
2555A	**Suspension arms, blue, rear, heavy duty (2)**
2555G	**Suspension arms, green, rear, heavy duty (2)**
2555T	**Suspension arms, orange, rear, heavy duty (2)**
2555R	**Suspension arms, red, rear, heavy duty (2)**
2555L	**Suspension arms, white, rear, heavy duty (2)**
3640	Suspension screw pin set, steel (hex drive) (requires part #2640 for a complete suspension pin set) (Bandit, Rustler®, Stampede®)
3644	Turnbuckles, camber link, 39mm (69mm center to center) (assembled with rod ends and hollow balls) (1 left, 1 right) (fits front & rear on Slash)

Shocks (Pro-level Aluminum)

2664	**Big Bore shock cylinder (long) (1)**
2666	**Big Bore shock cylinder (XX-long) (1)**
5862	**Big Bore shocks (hard-anodized & PTFE-coated T6 aluminum) (assembled with TiN shafts and springs) (front & rear) (4)**
2660	**Big Bore shocks (long) (hard-anodized & PTFE-coated T6 aluminum) (assembled with TiN shafts) w/o springs (front) (2)**
2662	**Big Bore shocks (XX-long) (hard-anodized & PTFE-coated T6 aluminum) (assembled with TiN shafts) w/o springs (rear) (2)**
2669	**Piston head set (2-hole (2)/ 3-hole (2))/ shock mounting bushings & washers (2) (Big Bore Shocks)**
2362	**Rebuild kit, Ultra shocks (for 2 shocks)**
1942	Rod ends (16 long & 4 short)/ hollow ball connectors (18)/ ball screws (2)
2742X	Rod ends, short (6)/ hollow balls (6)
2667	**Shock caps, aluminum (Big Bore Shocks) (2)**
1664T	**Shock shafts, hardened steel, titanium nitride coated (long) (2)**
2656T	**Shock shafts, hardened steel, titanium nitride coated (xx-long) (2)**
1664	Shock shafts, steel, chrome finish (long) (2)
2656	Shock shafts, steel, chrome finish (xx-long) (2)
1765	Silicone diaphragms (4)
1666	Silicone shock oil (30 wt)
2668	**Spring retainers, upper & lower (2)/ spring pre-load spacers: 1mm (4)/ 1.5mm (2)/ 2mm (2)/ 4mm (2)/ 8mm (2) (Big Bore Shocks)**
5860	**Springs, front (white) (progressive rate) (2) (fits #5862 aluminum Big Bore shocks)**
5859	**Springs, rear (white) (progressive rate) (2) (fits #5862 aluminum Big Bore shocks)**

Shocks (Ultra Shocks)

3765A	Body, Ultra Shock(s) (long) (grey) (2)
3766A	Body, Ultra Shock(s) (XXL) (grey) (2)
2362	**Rebuild kit, Ultra shocks (for 2 shocks)**
1942	Rod ends (16 long & 4 short)/ hollow ball connectors (18)/ ball screws (2)
2742X	Rod ends, short (6)/ hollow balls (6)
3767	**Shock caps (2)/ shock bottoms (2)**
8361	Shock caps (black) (4) (assembled with hollow balls)
2667	**Shock caps, aluminum (Big Bore Shocks) (2)**
3767A	**Shock caps, aluminum (blue-anodized) (4) (fits all Ultra Shocks)**
3767G	**Shock caps, aluminum (green-anodized) (4) (fits all Ultra Shocks)**
3767P	**Shock caps, aluminum (pink-anodized) (4) (fits all Ultra Shocks)**
3767X	**Shock caps, aluminum (red-anodized) (4) (fits all Ultra Shocks)**
1664T	**Shock shafts, hardened steel, titanium nitride coated (long) (2)**
2656T	**Shock shafts, hardened steel, titanium nitride coated (xx-long) (2)**
1664	**Shock shafts, steel, chrome finish (long) (2)**
2656	Shock shafts, steel, chrome finish (xx-long) (2)
3642X	**Shoulder screws, Ultra Shocks (3x12 hex drive) (6)**
1765	Silicone diaphragms (4)
1666	Silicone shock oil (30 wt)
3769	Spring pre-load spacers: 1mm (4)/ 2mm (2)/ 4mm (2)/ 8mm (2)
3768	Spring retainers, upper & lower (2)/ piston head set (2-hole (2)/ 3-hole (2))
2458	**Springs, front (black) (2)**
2458P	**Springs, front (pink) (2)**
5857P	**Springs, front (pink) (progressive rate) (2)**
2458A	**Springs, front (white) (2)**
5857	Springs, front (white) (progressive rate) (2)
3757	**Springs, rear (black) (2)**
3757T	**Springs, rear (blue) (2)**
3757A	**Springs, rear (green) (2)**
3757P	**Springs, rear (pink) (2)**
5858P	**Springs, rear (pink) (progressive rate) (2)**
3757X	**Springs, rear (white) (2)**
5858	Springs, rear (white) (progressive rate) (2)
4957	**Springs, red (for Ultra Shocks only) (2.5 rate) (f/r) (2)**
3760	**Ultra Shocks (black) (long) (complete w/ spring pre-load spacers & springs) (front) (2)**

BFGoodrich® Tires Trademarks are used under license from Michelin Group Companies.

SLASH™ (58024)

3762 **Ultra Shocks (black) (xx-long) (complete w/ spring pre-load spacers & springs) (rear) (2)**
3760A Ultra Shocks (grey) (long) (complete w/ spring pre-load spacers & springs) (2)
3762A Ultra Shocks (grey) (xx-long) (complete w/ spring pre-load spacers & springs) (rear) (2)

Slipper Clutch Components

3793 Input shaft (slipper shaft) / spring pin
5552X Rebuild kit, slipper clutch (steel disc/ friction pads (3)/ spring (2)/ pin/ 4.0mm NL (1)/ 5.0mm NL (1))
2554 Screws, 3x6mm cap-head machine (hex drive) (6)
5556 Slipper pressure plate & hub (aluminum alloy)

Spur Gears & Pinion Gears

3790 Gear adapter, fixed
2416 Gear, 16-T pinion (48-pitch) / set screw
1918 **Gear, 18-T pinion (48-pitch) / set screw**
2419 **Gear, 19-T pinion (48-pitch) / set screw**
2423 **Gear, 23-T pinion (48-pitch) / set screw**
2426 **Gear, 26-T pinion (48-pitch)/set screw**
2431 **Gear, 31-T pinion (48-pitch) / set screw**
4725 **Gear, pinion (25-tooth) (48-pitch) / set screw**
4728 **Gear, pinion (28-tooth) (48-pitch)/ set screw**
4683 **Spur gear, 83-tooth (48-pitch) (for models with Torque-Control slipper clutch)**
4686 **Spur gear, 86-tooth (48-pitch) (for models with Torque-Control slipper clutch)**
4690 Spur gear, 90-tooth (48-pitch) (for models with Torque-Control slipper clutch)

Steering Components

2728 **Ball bearings (5x8x2.5mm) (2)**
2545 Bellcrank bushings (plastic) (5x8x2.5mm) (4)
3643X **Camber links, front (TUBES blue-anodized, 7075-T6 aluminum, stronger than titanium) (83mm) (2)/ rod ends (4)/ aluminum wrench (1) (#2579 3x15 BCS (4) required for installation)**
3643G **Camber links, front (TUBES green-anodized, 7075-T6 aluminum, stronger than titanium) (83mm) (2)/ rod ends (4)/ aluminum wrench (1) (#2579 3x15 BCS (4) required for installation)**
3643R **Camber links, front (TUBES red-anodized, 7075-T6 aluminum, stronger than titanium) (83mm) (2)/ rod ends (4)/ aluminum wrench (1) (#2579 3x15 BCS (4) required for installation)**
1985 PTFE-coated washers, 5x8x0.5mm (20) (use with ball bearings)
2742 Rod ends, long (6)/ hollow ball connectors (6)
5347 Rod ends, Revo® (large) with hollow balls (12)
3744 Servo saver w/adapters
3742 Shoulder screws, steering bellcranks (3x30mm cap-head machine) (2)/ draglink shoulder screws (chrome) (2)
3743 Steering bellcranks (l&r)/ draglink
3743A **Steering bellcranks, drag link (blue-anodized 6061-T6 aluminum)/ 5x8mm ball bearings (4)/ hardware (assembled)**
3743G **Steering bellcranks, drag link (green-anodized 6061-T6 aluminum)/ 5x8mm ball bearings (4)/ hardware (assembled)**
3743P **Steering bellcranks, drag link (pink-anodized 6061-T6 aluminum)/ 5x8mm ball bearings (4)/ hardware (assembled)**
3743X **Steering bellcranks, drag link (red-anodized 6061-T6 aluminum)/ 5x8mm ball bearings (4)/ hardware (assembled)**
6845X **Steering bellcranks/ servo saver/ servo saver spring/ servo spring retainer/servo horn, steering**
1935 Turnbuckles, 36mm (2)
3139A **Turnbuckles, aluminum (blue-anodized), toe links, 59mm (2) (assembled w/ rod ends & hollow balls) (requires 5mm aluminum wrench #5477)**
3139X **Turnbuckles, aluminum (red-anodized), toe links, 59mm (2) (assembled with rod ends & hollow balls) (requires 5mm aluminum wrench #5477)**
3745 Turnbuckles, toe link, 59mm (78mm center to center) (2) (assembled with rod ends and hollow balls)
2746 Washers, 3x6mm metal (12)

Suspension Linkage

3643X **Camber links, front (TUBES blue-anodized, 7075-T6 aluminum, stronger than titanium) (83mm) (2)/ rod ends (4)/ aluminum wrench (1) (#2579 3x15 BCS (4) required for installation)**
3643G **Camber links, front (TUBES green-anodized, 7075-T6 aluminum, stronger than titanium) (83mm) (2)/ rod ends (4)/ aluminum wrench (1) (#2579 3x15 BCS (4) required for installation)**
3643R **Camber links, front (TUBES red-anodized, 7075-T6 aluminum, stronger than titanium) (83mm) (2)/ rod ends (4)/ aluminum wrench (1) (#2579 3x15 BCS (4) required for installation)**
3644X **Camber links, rear (TUBES blue-anodized, 7075-T6 aluminum, stronger than titanium) (73mm) (2)/ rod ends (4)/ aluminum wrench (1) (#2579 3x15 BCS (4) required for installation)**
3644G **Camber links, rear (TUBES green-anodized 7075-T6 aluminum, stronger than titanium) (73mm) (2)/ rod ends (4)/ aluminum wrench (1) (#2579 3x15 BCS (4) required for installation)**
3644R **Camber links, rear (TUBES red-anodized, 7075-T6 aluminum, stronger than titanium) (73mm) (2)/ rod ends (4)/ aluminum wrench (1) (#2579 3x15 BCS (4) required for installation)**
5525 Rod ends (12)/ hollow balls (12)
5347 Rod ends, Revo® (large) with hollow balls (12)
3739 Screw pin set (Rustler®/ Bandit/ Stampede®)
5529 Shim set, 3x7x1mm (2), 3x6x0.5mm (4), 3x7x2mm (2)/ hollow balls, captured (4)
2640 Suspension pins, 44mm (2) w/ e-clips
3640 Suspension screw pin set, steel (hex drive) (requires part #2640 for a complete suspension pin set) (Bandit, Rustler®, Stampede®)
3737A **Turnbuckle, aluminum (blue-anodized), 39mm (1)(assembled w/rod ends)/hollow balls (2) (fits front & rear on Slash)**
3737 **Turnbuckle, aluminum (red-anodized), 39mm (1) (assembled w/rod ends)/hollow balls (2) (fits front & rear on Slash)**
3741A **Turnbuckles, aluminum (blue-anodized), camber links, front, 39mm (2), rear, 49mm (2) (assembled w/rod ends & hollow balls)/ wrench**
3139A **Turnbuckles, aluminum (blue-anodized), toe links, 59mm (2) (assembled w/ rod ends & hollow balls) (requires 5mm aluminum wrench #5477)**
3741X **Turnbuckles, aluminum (red-anodized), camber links, front, 39mm (2), rear, 49mm (2) (assembled w/ rod ends & hollow balls)/wrench**
3139X **Turnbuckles, aluminum (red-anodized), toe links, 59mm (2) (assembled with rod ends & hollow balls) (requires 5mm aluminum wrench #5477)**
3644 Turnbuckles, camber link, 39mm (69mm center to center) (assembled with rod ends and hollow balls) (1 left, 1 right) (fits front & rear on Slash)
3745 Turnbuckles, toe link, 59mm (78mm center to center) (2) (assembled with rod ends and hollow balls)

Team Traxxas Items

2514 **Decal sheet, racing sponsors**
6160X **DVD, Maxx® Power! Full Throttle Action (sleeve)**
9950 **Official Team Traxxas® racing decal set (flag logo/ 6-color)**
9909 **Traxxas® racing banner, red & black (3x7 feet)**

Tires & Wheels

5116 Ball bearings, blue rubber sealed (5x11x4mm) (2)
5854 **Hub retainer, 17mm hubs, M4 X 0.7 (4) (use with #5853X, #6856X, #6469)**
3647 Nuts, 4mm flanged nylon locking (steel, serrated) (8)
1747R **Nuts, aluminum, flanged, serrated (4mm) (blue-anodized) (4)**
1747G **Nuts, aluminum, flanged, serrated (4mm) (green-anodized) (4)**
1747P **Nuts, aluminum, flanged, serrated (4mm) (pink-anodized) (4)**
1747P **Nuts, aluminum, flanged, serrated (4mm) (pink-anodized) (4)**
1985 PTFE-coated washers, 5x8x0.5mm (20) (use with ball bearings)
1647 Silicone grease
2754 Stub axle pins (4)
5880X Tires & wheels, assembled, glued (SCT satin chrome, beadlock style wheels, Kumho tires, foam inserts) (2) (4WD front/rear, 2WD rear only)
5880 **Tires & wheels, assembled, glued (SCT satin chrome, black beadlock style wheels, Kumho tires, foam inserts) (2) (4WD front/rear, 2WD rear only)**
5882 **Tires & wheels, assembled, glued (SCT Split-Spoke satin chrome, black beadlock style wheels, Kumho tires, foam inserts) (2) (2WD front)**
6873X **Tires & wheels, assembled, glued (S1 ultra-soft off-road racing compound) (SCT Split-Spoke satin chrome, black beadlock style wheels, BFG Mud-Terrain tires, foam inserts) (2) (4WD front/rear, 2WD rear only)**
5882R **Tires & wheels, assembled, glued (S1 ultra-soft off-road racing compound) (SCT Split-Spoke satin chrome, black beadlock style wheels, Kumho tires, foam inserts) (2) (2WD front)**
6874R **Tires & wheels, assembled, glued (S1 ultra-soft off-road racing compound) (SCT Split-Spoke satin chrome, black beadlock style wheels, Kumho tires, foam inserts) (2) (4WD front/rear, 2WD rear only)**
5877R **Tires & wheels, assembled, glued (S1 ultra-soft, off-road racing compound) (SCT Split-Spoke chrome, red beadlock style wheels, BFGoodrich® Mud-Terrain™ T/A® KM2 tires) (2) (2WD front)**
6873R **Tires & wheels, assembled, glued (S1 ultra-soft, off-road racing compound) (SCT Split-Spoke chrome, red beadlock style wheels, BFGoodrich® Mud-Terrain™ T/A® KM2 tires, foam inserts) (2) (4WD f/r, 2WD rear)**
5869 **Tires & wheels, assembled, glued (SCT chrome, red beadlock style wheels, BFGoodrich® Mud-Terrain™ T/A® KM2 tires, foam inserts) (2) (2WD front)**

BFGoodrich® Tires Trademarks are used under license from Michelin Group Companies.

5867 **Tires & wheels, assembled, glued (SCT chrome, red beadlock style wheels, BFGoodrich® Mud-Terrain™ T/A® KM2 tires, foam inserts) (2)(4WD front/rear, 2WD rear only)**

5873R **Tires & wheels, assembled, glued (SCT satin chrome red beadlock wheels, ultra-soft S1 compound off-road racing tires, inserts) (2) (2WD rear, 4WD f/r)**

5881X Tires & wheels, assembled, glued (SCT satin chrome, beadlock style wheels, Kumho tires, foam inserts) (2) (2WD front)

5875 **Tires & wheels, assembled, glued (SCT satin chrome, beadlock style wheels, SCT off-road racing tires, foam inserts) (2) (2WD front)**

5873 **Tires & wheels, assembled, glued (SCT satin chrome, beadlock style wheels, SCT off-road racing tires, foam inserts) (2) (4WD front/rear, 2WD rear only) (TSM rated)**

5878 **Tires & wheels, assembled, glued (SCT satin chrome, black beadlock style wheels, BFGoodrich® Mud-Terrain™ T/A® KM2 tires, foam inserts) (2)(4WD front/rear, 2WD rear only)**

5881 **Tires & wheels, assembled, glued (SCT satin chrome, black beadlock style wheels, Kumho tires, foam inserts) (2) (2WD front)**

5875X **Tires & wheels, assembled, glued (SCT satin chrome, black beadlock style wheels, SCT off-road racing tires, foam inserts) (2) (2WD front)**

5873X **Tires & wheels, assembled, glued (SCT satin chrome, black beadlock style wheels, SCT off-road racing tires, foam inserts) (2) (4WD front/rear, 2WD rear only)**

5873A **Tires & wheels, assembled, glued (SCT satin chrome, red-beadlock style wheels, SCT off-road tires, foam inserts) (2) (4WD front/rear, 2WD rear only)**

6873A **Tires & wheels, assembled, glued (SCT Split-Spoke chrome, red beadlock style wheels, BFGoodrich® Mud-Terrain™ T/A® KM2 tires, foam inserts) (2) (4WD f/r, 2WD rear)**

5891 **Tires & wheels, assembled, glued (SCT Split-Spoke satin chrome, beadlock style wheels, paddle tires, foam inserts) (2) (4WD front/rear, 2WD rear only) (TSM rated)**

6873 **Tires & wheels, assembled, glued (SCT Split-Spoke satin chrome, black beadlock style wheels, BFGoodrich® Mud-Terrain™ T/A® KM2 tires, foam inserts) (2) (4WD f/r, 2WD rear) (TSM® rated)**

6874 **Tires & wheels, assembled, glued (SCT Split-Spoke satin chrome, black beadlock style wheels, Kumho tires, foam inserts) (2) (4WD front/rear, 2WD rear only)**

5885 **Tires & wheels, assembled, glued (SCT Split-Spoke, black, satin chrome beadlock wheels, BFGoodrich® Mud-Terrain™ T/A® KM2 tires, foam inserts) (2) (2WD Front)**

5883 **Tires & wheels, assembled, glued (SCT Split-Spoke, black, satin chrome beadlock wheels, BFGoodrich® Mud-Terrain™ T/A® KM2 tire, foam inserts) (2) (4WD f/r, 2WD rear)**

5877A **Tires & wheels, assembled, glued (SCT Split-Spoke, chrome red beadlock style wheels, BFGoodrich® Mud-Terrain™ T/A® KM2 tires, foam inserts) (2) (2WD front)**

5877 **Tires & wheels, assembled, glued (SCT Split-Spoke, satin chrome, black beadlock wheels, BFGoodrich® Mud-Terrain™ T/A® KM2 tires, foam inserts) (2) (2WD front)**

5865 **Tires & wheels, assembled, glued (SCT, chrome, green beadlock wheel, BFGoodrich® Mud-Terrain™ T/A® KM2 tire, foam inserts) (2) (2WD front only)**

6876 **Tires & wheels, assembled, glued (SCT, chrome, green beadlock wheel, BFGoodrich® Mud-Terrain™ T/A® KM2 tire, foam inserts) (2) (4WD front/rear, 2WD rear only)**

6871 **Tires, BFGoodrich® Mud-Terrain T/A® KM2 (dual profile 4.3x1.7-2.2/3.0") (2)/ foam inserts (2)**

6871R **Tires, BFGoodrich® Mud-Terrain T/A® KM2 , ultra-soft (S1 off-road racing compound) (dual profile 4.3x1.7- 2.2/3.0") (2)/ foam inserts (2)**

6870 Tires, Kumho (dual profile 4.3x1.7- 2.2/3.0") (2)/ foam inserts (2)

6870R **Tires, Kumho, ultra-soft (S1 off-road racing compound) (dual profile 4.3x1.7- 2.2/3.0") (2)/ foam inserts (2)**

5871 **Tires, off-road racing, SCT dual profile 4.3x1.7- 2.2/3.0" (2)/ foam inserts (2)**

5871R **Tires, ultra-soft, S1 compound for off-road racing, SCT dual profile 4.3x1.7- 2.2/3.0" (2)/ foam inserts (2)**

1654 Wheel hubs, hex (rear) (2)/ stub axle pins (2)

3654 Wheel hubs, hex (tall offset, Rustler®/Stampede® front) (2)/ axle pins (2.5x10mm) (2)

5853X **Wheel hubs, splined, 17mm, short (2), long (2)/wheel nuts, splined, 17mm (4) (blue-anodized)/ hub retainer M4x0.7 (4)/axle pin (4)/wrench, 5mm**

5353 **Wheel nuts, splined, 17mm (blue-anodized) (4)**

5480X **Wheel wrench, splined, 17mm**

5870 **Wheels, SCT chrome, red beadlock style, dual profile (2.2" outer, 3.0" inner) (2WD front) (2)**

5868 **Wheels, SCT chrome, red beadlock style, dual profile (2.2" outer, 3.0" inner) (4WD front/rear, 2WD rear only) (2)**

5874 Wheels, SCT satin chrome, beadlock style, dual profile (2.2" outer, 3.0" inner) (2WD front)

5872 Wheels, SCT satin chrome, beadlock style, dual profile (2.2" outer, 3.0" inner) (4WD front/rear, 2WD rear only)

5872X **Wheels, SCT satin chrome, black beadlock style SCT, dual profile (2.2" outer, 3.0" inner) (4WD front/rear, 2WD rear only) (2)**

5874X **Wheels, SCT satin chrome, black beadlock style, dual profile (2.2" outer, 3.0" inner) (2WD front) (2)**

5874A **Wheels, SCT satin chrome, red beadlock style, dual profile (2.2" outer, 3.0" inner) (2WD front) (2)**

5872A **Wheels, SCT satin chrome, red beadlock style, dual profile (2.2" outer, 3.0" inner) (4WD front/rear, 2WD rear only) (2)**

5886 **Wheels, SCT Split-Spoke, black, satin chrome beadlock style, dual profile (2.2" outer, 3.0" inner) (2WD front) (2)**

5884 **Wheels, SCT Split-Spoke, black, satin chrome beadlock style, dual profile (2.2" outer, 3.0" inner) (4WD f/r, 2WD rear) (2)**

6872X **Wheels, SCT Split-Spoke, chrome, green beadlock style, dual profile (2.2" outer, 3.0" inner) (4WD front/rear, 2WD rear) (2)**

5876A **Wheels, SCT Split-Spoke, chrome, red beadlock style, dual profile (2.2" outer, 3.0" inner) (2WD front) (2)**

6872A **Wheels, SCT Split-Spoke, chrome, red beadlock style, dual profile (2.2" outer, 3.0" inner) (4WD front/rear, 2WD rear) (2)**

5876 **Wheels, SCT Split-Spoke, satin chrome, black beadlock style, dual profile (2.2" outer, 3.0" inner) (2WD front) (2)**

6872 **Wheels, SCT Split-Spoke, satin chrome, black beadlock style, dual profile (2.2" outer, 3.0" inner) (4WD front/rear, 2WD rear only) (2)**

5866 **Wheels, SCT, chrome, green beadlock style, dual profile (2.2" outer, 3.0" inner) (2) (2WD front only)**

6875 **Wheels, SCT, chrome, green beadlock style, dual profile (2.2" outer, 3.0" inner) (2) (4WD front/rear, 2WD rear only)**

Transmission Components

1552 **Motor screws (3x8mm hex cap) (6)/washers (6)/ wrench**

4607 **Ball bearings (5x11x4mm) (8)**

5116 Ball bearings, blue rubber sealed (5x11x4mm) (2)

3792 Cover, gear/ rubber gear cover plug/ 3x6 RM (2)

3790 Gear adapter, fixed

3691 **Gearbox halves (l&r) (black) w/ idler gear shaft**

3691A Gearbox halves (l&r) (grey) w/ idler gear shaft

5148 Grease, white lithium

3696 Idler gear, steel (30-tooth)

3793 Input shaft (slipper shaft) / spring pin

2381X Main diff with steel ring gear/ side cover plate/ screws (Bandit, Stampede®, Rustler®)

2382 Planet gears (4)/ planet shafts (4)/ sun gears (2)/sun gear alignment shaft (1) all hardened steel

2388X Planetary gear differential with steel ring gear (complete) (fits Bandit, Stampede®, Rustler®)

5552X Rebuild kit, slipper clutch (steel disc/ friction pads (3)/ spring (2)/ pin/ 4.0mm NL (1)/ 5.0mm NL (1))

2554 Screws, 3x6mm cap-head machine (hex drive) (6)

3931 Screws, 3x8mm flat-head machine (hex drive) (6)

1647 Silicone grease

5556 Slipper pressure plate & hub (aluminum alloy)

3195 Top drive gear, steel (22-tooth)

Traxxas Tools

3433X **Body reamer (aluminum handle)**

3433 **Body reamer (plastic handle)**

3436 **Cap, body reamer**

3432 **Scissors, curved tip**

3431 **Scissors, straight tip**

8712 **Speed Bit Essentials Set, hex and nut driver, 7-piece, includes premium handle (medium), travel pouch, hex drivers (straight: 1.5mm, 2.0mm, 2.5mm) and nut drivers (5.0mm, 5.5mm, 7.0mm, and 8.0mm), 1/4" drive**

8721 **Speed bit handle, medium (one piece)**

8720 **Speed bit handle, premium, large (rubber overmold)**

8722 **Speed bit handle, premium, medium (rubber overmold)**

8710 **Speed Bit Master Set, hex and nut driver, 13-piece, includes premium handle (medium), travel pouch, hex drivers (straight: 1.5mm, 2.0mm, 2.5mm, 3.0mm), (ball-end: 2.0mm, 2.5mm, 3.0mm), and nut drivers (4.00mm, 4.50mm, 5.00mm, 5.50mm, 7.00mm, 8.00mm),**

8711 **Speed Bit Master Set, hex driver, 7-piece straight and ball end, includes premium handle (medium), travel pouch, hex drivers (straight: 1.5mm, 2.0mm, 2.5mm, 3.0mm) (ball end: 2.0mm, 2.5mm, 3.0mm), 1/4" drive**

8719 **Speed Bit Master Set, nut driver, 6-piece, includes premium handle (medium), travel pouch, and nut drivers (4.0mm, 4.5mm, 5.0mm, 5.5mm, 7.0mm, 8.0mm), 1/4" drive**

8716 **Speed Bit Set, hex driver, 2-piece ball-end (2.0mm, 2.5mm), 1/4" drive**

BFGoodrich® Tires Trademarks are used under license from Michelin Group Companies.

SLASH™ (58024)

8716X	**Speed Bit Set, hex driver, 3-piece ball-end (2.0mm, 2.5mm, 3.0mm), 1/4" drive**
8715	**Speed Bit Set, hex driver, 3-piece straight (1.5mm, 2.0mm, 2.5mm), 1/4" drive**
8715X	**Speed Bit Set, hex driver, 4-piece straight (1.5mm, 2.0mm, 2.5mm, 3.0mm), 1/4" drive**
3415	**Tool set with pouch (includes 1.5mm, 2.0mm, 2.5mm, 3.0mm, 3.5mm, 4mm drivers/ 4mm, 5mm, 5.5mm, 7mm and 8mm nut drivers/ 2mm, 4mm, and 5mm slotted screwdrivers/ #00 Phillips, #0 Phillips, and #1 Phillips screwdrivers/ 4mm and 8mm wrench/ driver handle**

Turnbuckles & Threaded Rods

3643X	**Camber links, front (TUBES blue-anodized, 7075-T6 aluminum, stronger than titanium) (83mm) (2)/ rod ends (4)/ aluminum wrench (1) (#2579 3x15 BCS (4) required for installation)**
3643G	**Camber links, front (TUBES green-anodized, 7075-T6 aluminum, stronger than titanium) (83mm) (2)/ rod ends (4)/ aluminum wrench (1) (#2579 3x15 BCS (4) required for installation)**
3643R	**Camber links, front (TUBES red-anodized, 7075-T6 aluminum, stronger than titanium) (83mm) (2)/ rod ends (4)/ aluminum wrench (1) (#2579 3x15 BCS (4) required for installation)**
3644X	**Camber links, rear (TUBES blue-anodized, 7075-T6 aluminum, stronger than titanium) (73mm) (2)/ rod ends (4)/ aluminum wrench (1) (#2579 3x15 BCS (4) required for installation)**
3644G	**Camber links, rear (TUBES green-anodized 7075-T6 aluminum, stronger than titanium) (73mm) (2)/ rod ends (4)/ aluminum wrench (1) (#2579 3x15 BCS (4) required for installation)**
3644R	**Camber links, rear (TUBES red-anodized, 7075-T6 aluminum, stronger than titanium) (73mm) (2)/ rod ends (4)/ aluminum wrench (1) (#2579 3x15 BCS (4) required for installation)**
5525	Rod ends (12)/ hollow balls (12)
5347	Rod ends, Revo® (large) with hollow balls (12)
3737A	**Turnbuckle, aluminum (blue-anodized), 39mm (1)(assembled w/rod ends)/hollow balls (2) (fits front & rear on Slash)**
3737	**Turnbuckle, aluminum (red-anodized), 39mm (1) (assembled w/rod ends)/hollow balls (2) (fits front & rear on Slash)**
3741A	**Turnbuckles, aluminum (blue-anodized), camber links, front, 39mm (2), rear, 49mm (2) (assembled w/rod ends & hollow balls)/ wrench**
3139A	**Turnbuckles, aluminum (blue-anodized), toe links, 59mm (2) (assembled w/ rod ends & hollow balls) (requires 5mm aluminum wrench #5477)**
3741X	**Turnbuckles, aluminum (red-anodized), camber links, front, 39mm (2), rear, 49mm (2) (assembled w/ rod ends & hollow balls)/wrench**
3139X	**Turnbuckles, aluminum (red-anodized), toe links, 59mm (2) (assembled with rod ends & hollow balls) (requires 5mm aluminum wrench #5477)**
3644	Turnbuckles, camber link, 39mm (69mm center to center) (assembled with rod ends and hollow balls) (1 left, 1 right) (fits front & rear on Slash)
3745	Turnbuckles, toe link, 59mm (78mm center to center) (2) (assembled with rod ends and hollow balls)

If you have questions or need technical assistance, call Traxxas at:

1-888-TRAXXAS

(1-888-872-9927) (U.S. residents only)

For orders, calls outside the U.S., and other information, call 972-549-3000, or fax to 972-549-3011 e-mail Traxxas at support@Traxxas.com

TRAXXAS.com

BFGoodrich® Tires Trademarks are used under license from Michelin Group Companies.

RACE REPLICA SLASH

MODEL 58034-1

ELECTRIC POWERED 2WD
SHORT COURSE RACE TRUCK



30+ mph

HIGH-CAPACITY 3000 MAH 7-CELL BATTERY AND 4-AMP DC FAST CHARGER

WATERPROOF XL-5 ESC AND TITAN 12T MOTOR

TQ 2.4GHz 2-CHANNEL TRANSMITTER

INTENSE SHORT-COURSE RACING ACTION!

When the racing action cools down, the Traxxas Slash is well-equipped to tackle all of your off-track driving adventures. The long travel suspension and oil-filled shocks easily absorb jumps and rough terrain. The unique chassis design provides huge center ground clearance to drive over deep ruts, rocks, and other obstacles that leave ordinary R/C trucks stuck. The tires use advanced tread design and sophisticated rubber compounds to provide incredible grip off-road with enough versatility to also perform well on concrete and asphalt. The fenders cover the tires so you bang against your driving buddies without getting tangled up.

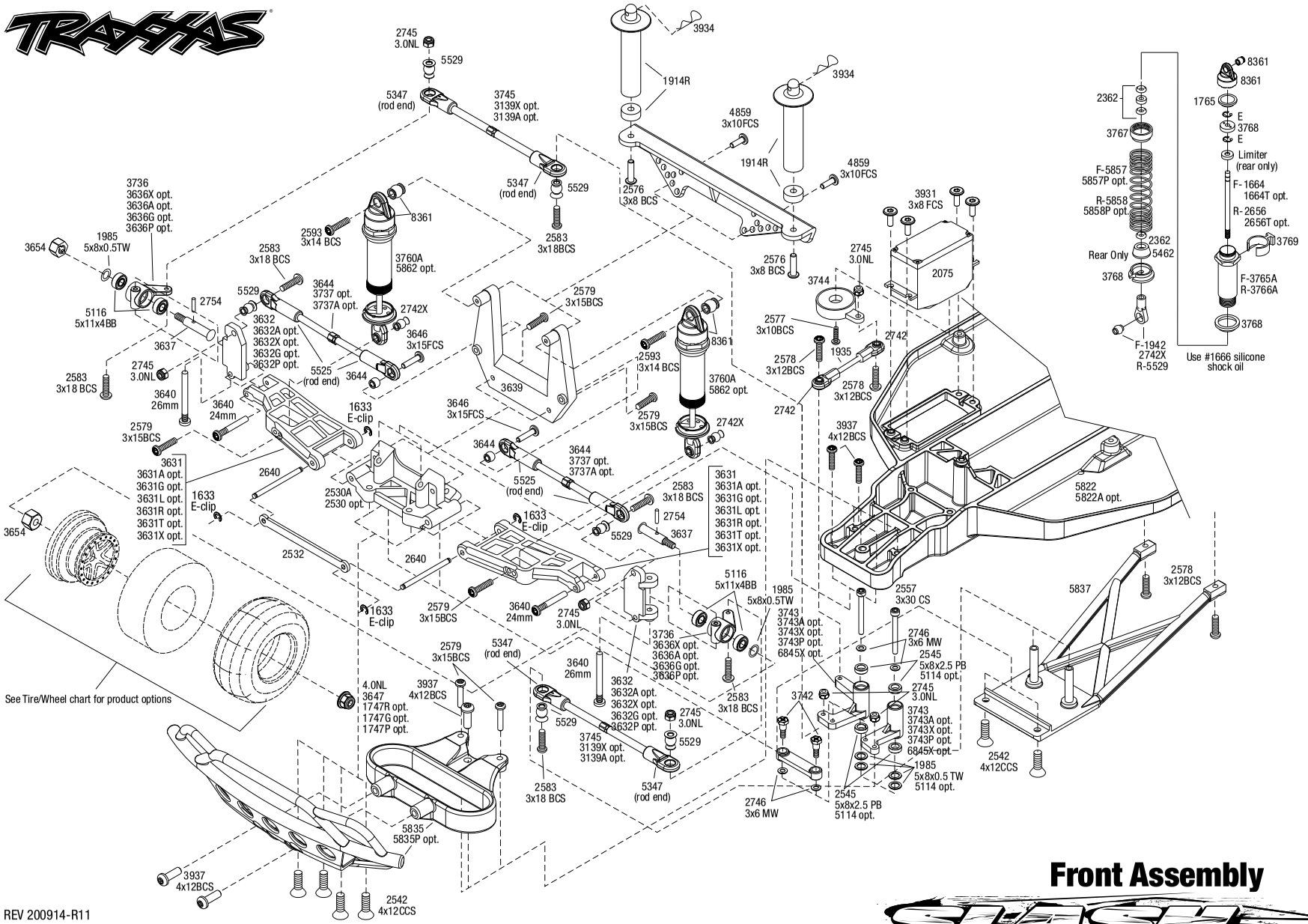

Front Assembly

REV 200914-R11

Specifications on this page are subject to change without notice. Every attempt has been made to ensure the accuracy of this drawing; however, Traxxas cannot be held responsible for typographical or other errors.

See Parts List for a complete listing of optional accessories.

SLASH™ (58034-1)

EXPLODED **VIEWS**

Chassis Assembly

See Parts List for a complete listing of optional accessories.

REV 200914-R11

Specifications on this page are subject to change without notice. Every attempt has been made to ensure the accuracy of this drawing; however, Traxxas cannot be held responsible for typographical or other errors.

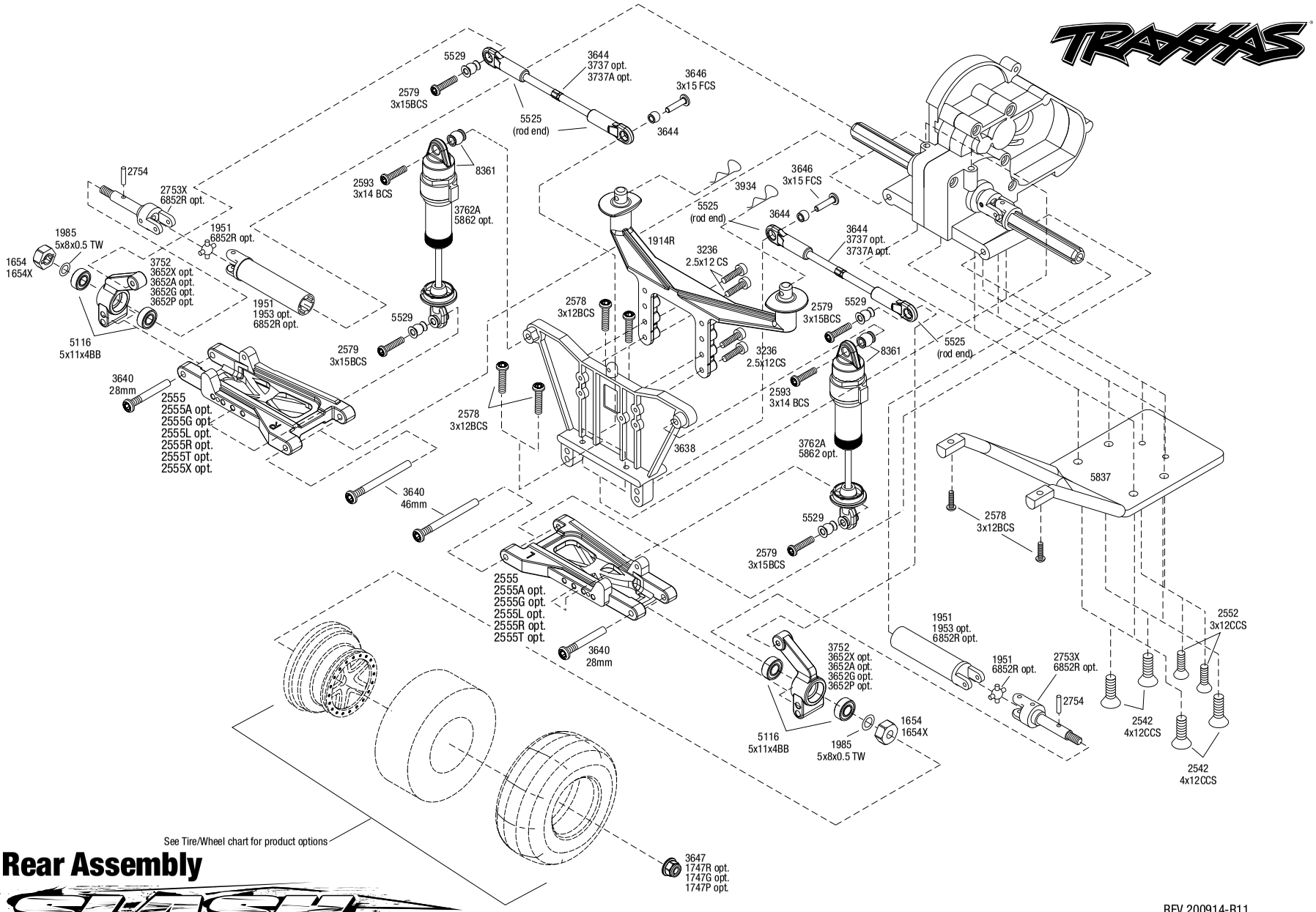

Rear Assembly

SLASH

See Parts List for a complete listing of optional accessories.

REV 200914-R11

Specifications on this page are subject to change without notice. Every attempt has been made to ensure the accuracy of this drawing; however, Traxxas cannot be held responsible for typographical or other errors.

Questions? Call toll-free, 1-888-TRAXXAS

SLASH

Transmission Assembly

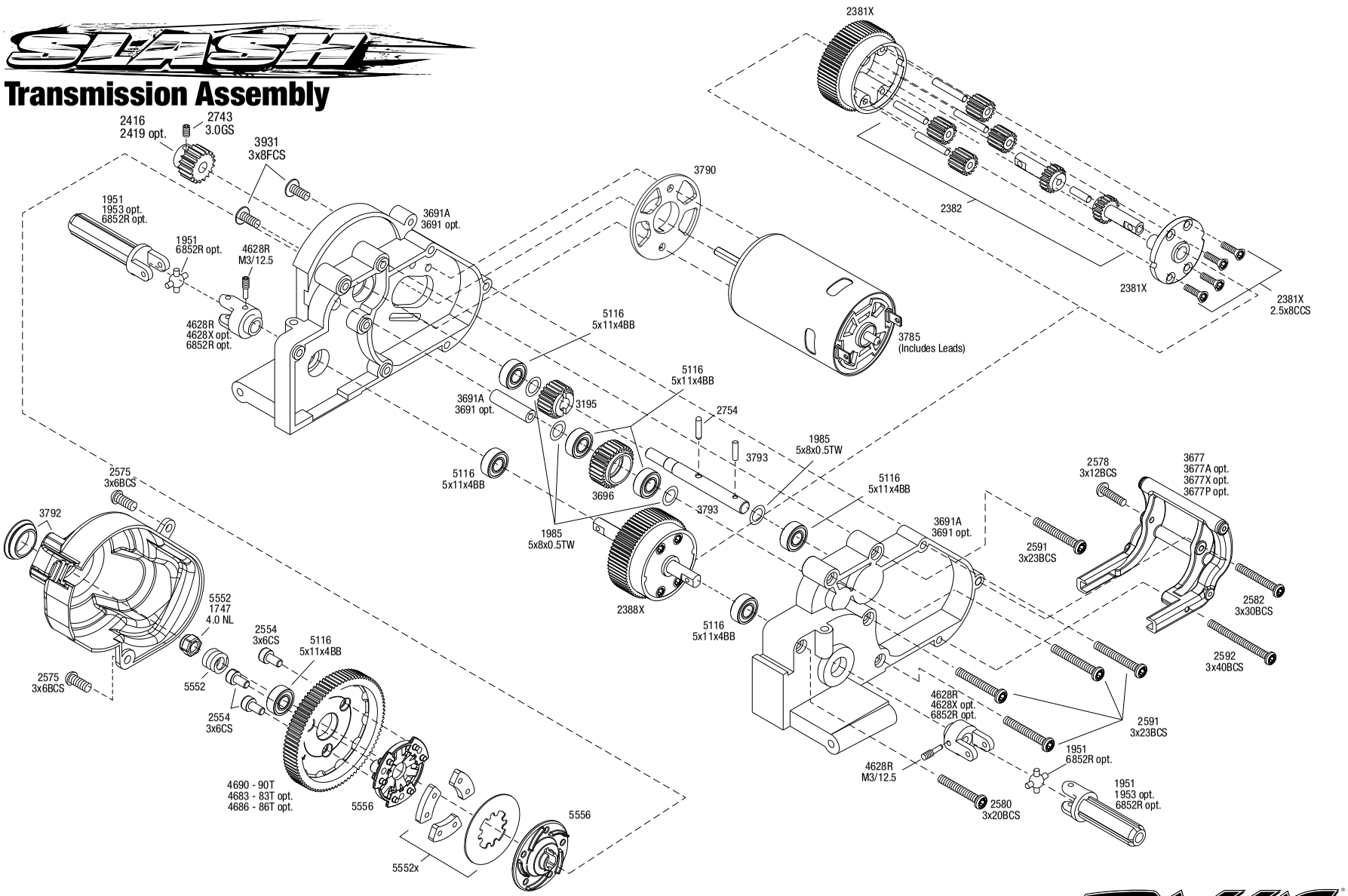

REV 200914-R11

See Parts List for a complete listing of optional accessories.

Specifications on this page are subject to change without notice. Every attempt has been made to ensure the accuracy of this drawing,; however, Traxxas cannot be held responsible for typographical or other

PARTS SHOWN IN BOLD ARE OPTIONAL ACCESSORIES.

Part categories and individual part listings are arranged alphabetically.

Bearings & Bushings

4607 **Ball bearings (5x11x4mm) (8)**
2728 **Ball bearings (5x8x2.5mm) (2)**
5116 Ball bearings, blue rubber sealed (5x11x4mm) (2)
5114 **Ball bearings, blue rubber sealed (5x8x2.5mm) (2)**
2545 Bellcrank bushings (plastic) (5x8x2.5mm) (4)
1675 **Bushings, self-lubricating (5x11x4mm) (14)**
1985 PTFE-coated washers, 5x8x0.5mm (20) (use with ball bearings)

Body & Accessories

1926 **Antenna caps, vinyl (2)/ antenna spool**
1726 Antenna, tube (1)/ vinyl antenna cap (1)/ wire retainer (1)
3935 Body clip (mounting clip), angled, 90-degrees (10)
3935A **Body clip (mounting clip), angled, 90-degrees (black) (10)**
3934 Body clips, heavy duty (12)
1914R Body mount, front & rear (black)/ body posts, 52mm (2), 38mm (2), 25mm (2), 6.5mm (2)/ body post extensions (4)/ hardware
1815 Body washers (8)
6716 **Body washers, foam, 2mm (2)/ 3mm (2)/ 4mm (4)**
6811 **Body, Slash 4X4 (clear, requires painting)/ window masks/ decal sheet**
6811R **Body, Slash 4X4, heavy duty (clear, untrimmed, requires painting)/ window masks/ decal sheet**
6811X **Body, Slash 4X4, ProGraphix (Graphics are printed, requires paint & final color application)/ decal sheet**
6849 **Body, Slash 4X4/Slash, Fox Edition (painted, decals applied)**
2514 **Decal sheet, racing sponsors**
5813 **Decal Sheet, Slash**
9950 **Official Team Traxxas® racing decal set (flag logo/ 6-color)**
5846 **Paint masks, body**

Chassis & Attachments

5526 Antenna crimp nut, aluminum (blue-anodized)/ antenna nut tools
5526R **Antenna crimp nut, aluminum (red-anodized)/ antenna nut tools**
1914R Body mount, front & rear (black)/ body posts, 52mm (2), 38mm (2), 25mm (2), 6.5mm (2)/ body post extensions (4)/ hardware
5624 Box, receiver (sealed)/ foam pad/ silicone grease/ 3x8mm BCS (2)/ 2.5x8mm CS (2)/ 3x6mm BCS (2)
5835 Bumper, front/ bumper mount, front (black)
5835P **Bumper, front/ bumper mount, front (pink)**
5836 Bumper, rear/ bumper mount, rear (black)
5836P **Bumper, rear/ bumper mount, rear (pink)**
5830 **Chassis conversion kit, low CG (Slash)**
5832 **Chassis, low CG (black)**
5832A **Chassis, low CG (blue)**
5832G **Chassis, low CG (grey)**
5822 Chassis, Slash
5822A **Chassis, Slash (black)**
5827 Hold down, battery/ hold down retainer/ battery post/ foam spacer/ angled body clip
5827X **Hold down, battery/ hold down retainer/ battery post/ foam spacer/ angled body clip (allows for installation of taller, multi-cell batteries)**
5831 **Lower chassis, low CG (black)**
5831A **Lower chassis, low CG (blue)**
5831G **Lower chassis, low CG (grey)**
5823 Nerf bars, chassis (black)
5833 **Nerf bars, low CG (black)**
5833A **Nerf bars, low CG (blue)**
5833G **Nerf bars, low CG (grey)**
5625 Seal kit, receiver box (includes o-ring, seals, and silicone grease)
5837 Skidplates, front & rear (black)
5185 **Tires, rubber (2) (fits Traxxas® wheelie bar wheels)**
4974 **Wheelie bar arm (1)/ connector (1)/ 3x12 SS (hex drive) (4)**
3677A **Wheelie bar mount (1) / hardware (green)**
3677P **Wheelie bar mount (1) / hardware (pink)**
3677 Wheelie bar mount (1)/ hardware (black)
3677X **Wheelie bar mount (1)/ hardware (blue)**
3678 **Wheelie bar, assembled (black) (fits Slash, Bandit, Rustler®, Stampede® series)**
3678X **Wheelie bar, assembled (blue) (fits Slash, Bandit, Rustler®, Stampede® series)**
3678A **Wheelie bar, assembled (green) (fits Slash, Bandit, Rustler®, Stampede® series)**
3678P **Wheelie bar, assembled (pink) (fits Slash, Bandit, Rustler®, Stampede® series)**
4976 **Wheels (4)/ axles (2) (for T-Maxx®/E-Maxx wheelie bar)**
5186A **Wheels, aluminum (blue-anodized) (2)/ 5x8mm ball bearings (4)/ axles (2)/ rubber tires (2)**
5186 **Wheels, aluminum (red-anodized) (2)/ 5x8mm ball bearings (4)/ axles (2)/ rubber tires (2)**

Differential Components

2381X Main diff with steel ring gear/ side cover plate/ screws (Bandit, Stampede®, Rustler®)
2382 Planet gears (4)/ planet shafts (4)/ sun gears (2)/sun gear alignment shaft (1) all hardened steel
2388X Planetary gear differential with steel ring gear (complete) (fits Bandit, Stampede®, Rustler®)
5169 Screws, 2.6x8mm countersunk machine (6)
1647 Silicone grease

Driveline Components

5116 Ball bearings, blue rubber sealed (5x11x4mm) (2)
9059X **Cross pin (2)/ drive pin (2) (repairs 2 axle shafts)**
9057X **Differential output shafts, steel-splined constant-velocity (2)**
4628R Differential output yokes, black (2)/ 3x5mm countersunk screws (2)/ screw pin (2)
4628X **Differential output yokes, hardened steel (w/ U-joints) (2)**
6828X **Differential output yokes, heavy duty (2)/ screw pin (2)**
6852X **Driveshaft assembly, rear, heavy duty (1) (left or right) (fully assembled, ready to install)/ screw pin (1)**
6852R **Driveshafts, rear, steel-spline constant-velocity (complete assembly) (2)**
9052X **Driveshafts, rear, steel-spline constant-velocity (complete assembly) (2)**
1953 **Half shaft pro-pack (internal-splined (6)/ external-splined (6) (plastic shafts only)**
9055X **Half shaft, external splined (steel-spline constant velocity) (1)**
6750 **Half shaft, external splined (steel-spline constant-velocity) (1)**
9056X **Half shaft, internal splined (steel-spline constant velocity) (1)**
6751 **Half shaft, internal splined (steel-spline constant-velocity) (1)**
6850X **Half shafts, heavy duty (external splined (2)/ internal splined (2))/ metal u-joints (4)**
1951 Half shafts, long truck (external-splined (2) & internal-splined (2)/ metal U-joints (4)
6757 **Rebuild kit, steel-splined constant-velocity driveshafts (includes pins, dustboots, lube, and hardware)**
9058X **Rebuild kit, steel-splined constant-velocity driveshafts (includes pins, lube, and hardware for two axle shafts)**
3752 Stub axle carriers (2) (requires 5x11x4mm bearings)
3652A **Stub axle carriers, Rustler®/Stampede®/Bandit (2), 6061-T6 aluminum (blue-anodized)/ 5x11mm ball bearings (4)**
3652G **Stub axle carriers, Rustler®/Stampede®/Bandit (2), 6061-T6 aluminum (green-anodized)/ 5x11mm ball bearings (4)**
3652P **Stub axle carriers, Rustler®/Stampede®/Bandit (2), 6061-T6 aluminum (pink-anodized)/ 5x11mm ball bearings (4)**
3652P **Stub axle carriers, Rustler®/Stampede®/Bandit (2), 6061-T6 aluminum (pink-anodized)/ 5x11mm ball bearings (4)**
3652X **Stub axle carriers, Rustler®/Stampede®/Bandit (2), 6061-T6 aluminum (red-anodized)/ 5x11mm ball bearings (4)**
2754 Stub axle pins (4)
6753 **Stub axle, rear, 5mm (steel-splined constant-velocity driveshaft) (1)**
9053X **Stub axle, rear, steel-splined constant velocity (1)**
2753X Stub axles, rear (2)
6853X **Stub axles, rear, heavy duty (2)/pins (2)**

Front Suspension & Steering

3637 Axles (front) (2)
2728 **Ball bearings (5x8x2.5mm) (2)**
5116 Ball bearings, blue rubber sealed (5x11x4mm) (2)
2545 Bellcrank bushings (plastic) (5x8x2.5mm) (4)
2530 **Bulkhead (front) (black)**
2530A Bulkhead (front) (grey)
3643X **Camber links, front (TUBES blue-anodized, 7075-T6 aluminum, stronger than titanium) (83mm) (2)/ rod ends (4)/ aluminum wrench (1) (#2579 3x15 BCS (4) required for installation)**
3643G **Camber links, front (TUBES green-anodized, 7075-T6 aluminum, stronger than titanium) (83mm) (2)/ rod ends (4)/ aluminum wrench (1) (#2579 3x15 BCS (4) required for installation)**
3643R **Camber links, front (TUBES red-anodized, 7075-T6 aluminum, stronger than titanium) (83mm) (2)/ rod ends (4)/ aluminum wrench (1) (#2579 3x15 BCS (4) required for installation)**
3632 Caster blocks (l&r) (30-degree)

SLASH™ (58034-1)

3632A	**Caster blocks, 30-degree, blue-anodized 6061-T6 aluminum (left & right)/ suspension screw pin (2)**
3632G	**Caster blocks, 30-degree, green-anodized 6061-T6 aluminum (left & right)/ suspension screw pin (2)**
3632P	**Caster blocks, 30-degree, pink-anodized 6061-T6 aluminum (left & right)/ suspension screw pin (2)**
3632X	**Caster blocks, 30-degree, red-anodized 6061-T6 aluminum (left & right)/ suspension screw pin (2)**
5347	Rod ends, Revo® (large) with hollow balls (12)
3646	Screws, 3x15mm flat-head machine (hex drive) (6)
3744	Servo saver w/adapters
3639	Shock tower (front)
3743	Steering bellcranks (l&r)/ draglink
3743A	**Steering bellcranks, drag link (blue-anodized 6061-T6 aluminum)/ 5x8mm ball bearings (4)/ hardware (assembled)**
3743G	**Steering bellcranks, drag link (green-anodized 6061-T6 aluminum)/ 5x8mm ball bearings (4)/ hardware (assembled)**
3743P	**Steering bellcranks, drag link (pink-anodized 6061-T6 aluminum)/ 5x8mm ball bearings (4)/ hardware (assembled)**
3743X	**Steering bellcranks, drag link (red-anodized 6061-T6 aluminum)/ 5x8mm ball bearings (4)/ hardware (assembled)**
6845X	**Steering bellcranks/ servo saver/ servo saver spring/ servo spring retainer/servo horn, steering**
3736	Steering blocks, left & right (2) (requires 5x11x4mm bearings)
3636A	**Steering blocks, Rustler®/Stampede®/Bandit (2), 6061-T6 aluminum (blue-anodized)/ 5x11mm ball bearings (4)**
3636G	**Steering blocks, Rustler®/Stampede®/Bandit (2), 6061-T6 aluminum (green-anodized)/ 5x11mm ball bearings (4)**
3636P	**Steering blocks, Rustler®/Stampede®/Bandit (2), 6061-T6 aluminum (pink-anodized)/ 5x11mm ball bearings (4)**
3636X	**Steering blocks, Rustler®/Stampede®/Bandit (2), 6061-T6 aluminum (red-anodized)/ 5x11mm ball bearings (4)**
3631	Suspension arms (front) (2)
3631X	**Suspension arms, black, front, heavy duty (2)**
3631A	**Suspension arms, blue, front, heavy duty (2)**
3631G	**Suspension arms, green, front, heavy duty (2)**
3631T	**Suspension arms, orange, front, heavy duty (2)**
3631R	**Suspension arms, red, front, heavy duty (2)**
3631L	**Suspension arms, white, front, heavy duty (2)**
2640	Suspension pins, 44mm (2) w/ e-clips
3640	Suspension screw pin set, steel (hex drive) (requires part #2640 for a complete suspension pin set) (Bandit, Rustler®, Stampede®)
2532	Tie bar, fiberglass
1935	Turnbuckles, 36mm (2)
3139A	**Turnbuckles, aluminum (blue-anodized), toe links, 59mm (2) (assembled w/ rod ends & hollow balls) (requires 5mm aluminum wrench #5477)**
3139X	**Turnbuckles, aluminum (red-anodized), toe links, 59mm (2) (assembled with rod ends & hollow balls) (requires 5mm aluminum wrench #5477)**
3644	Turnbuckles, camber link, 39mm (69mm center to center) (assembled with rod ends and hollow balls) (1 left, 1 right) (fits front & rear on Slash)
3745	Turnbuckles, toe link, 59mm (78mm center to center) (2) (assembled with rod ends and hollow balls)

Hardware

1926	**Antenna caps, vinyl (2)/ antenna spool**
1726	Antenna, tube (1)/ vinyl antenna cap (1)/ wire retainer (1)
3935	Body clip (mounting clip), angled, 90-degrees (10)
3935A	**Body clip (mounting clip), angled, 90-degrees (black) (10)**
3934	Body clips, heavy duty (12)
1589	Double-sided adhesive tape (25mm x 25mm) (2)
1633	E-clips/ C-rings
2586	Screws, 3x15mm cap-head machine (hex drive) (6)
2745	Nuts, 3mm nylon locking (12)
3647	Nuts, 4mm flanged nylon locking (steel, serrated) (8)
1747	Nuts, 4mm nylon locking (10)
1747R	**Nuts, aluminum, flanged, serrated (4mm) (blue-anodized) (4)**
1747G	**Nuts, aluminum, flanged, serrated (4mm) (green-anodized) (4)**
1747P	**Nuts, aluminum, flanged, serrated (4mm) (pink-anodized) (4)**
1747P	**Nuts, aluminum, flanged, serrated (4mm) (pink-anodized) (4)**
1747A	**Nuts, aluminum, flanged, serrated (4mm) (red-anodized) (4)**
1985	PTFE-coated washers, 5x8x0.5mm (20) (use with ball bearings)
5525	Rod ends (12)/ hollow balls (12)
5347	Rod ends, Revo® (large) with hollow balls (12)
2742X	Rod ends, short (6)/ hollow balls (6)
3215	Screws, 2.5x6mm cap-head machine (hex drive) (6)
3965	Screws, 2.5x8mm cap-head machine (6)
2577	Screws, 3x10mm button-head machine (hex drive) (6)
4859	Screws, 3x10mm flat-head machine (hex drive) (4)
2578	Screws, 3x12mm button-head machine (hex drive) (6)
2552	Screws, 3x12mm countersunk machine (6) (hex drive)
2579	Screws, 3x15mm button-head machine (hex drive) (6)
3646	Screws, 3x15mm flat-head machine (hex drive) (6)
2583	Screws, 3x18mm button-head machine (hex drive) (6)
2580	Screws, 3x20mm button-head machine (hex drive) (6)
2591	Screws, 3x23mm button-head machine (hex drive) (6)
2582	Screws, 3x30mm button-head machine (hex drive) (6)
2592	Screws, 3x40mm button-head machine (hex drive) (6)
2575	Screws, 3x6mm button-head machine (hex drive) (6)
3932	Screws, 3x6mm flat-head machine (hex drive) (6)
2576	Screws, 3x8mm button-head machine (hex drive) (6)
3931	Screws, 3x8mm flat-head machine (hex drive) (6)
3937	Screws, 4x12mm button-head machine (hex drive) (6)
2542	Screws, 4x12mm countersunk machine (hex drive) (6)
2546	Screws, 4x15mm countersunk machine (hex drive) (6)
2743	Set (grub) screws, 3mm hardened (12)
5529	Shim set, 3x7x1mm (2), 3x6x0.5mm (4), 3x7x2mm (2)/ hollow balls, captured (4)
3742	Shoulder screws, steering bellcranks (3x30mm cap-head machine) (2)/ draglink shoulder screws (chrome) (2)
3642X	**Shoulder screws, Ultra Shocks (3x12 hex drive) (6)**
2754	Stub axle pins (4)
2746	**Washers, 3x6mm metal (12)**

Motors & Electronics

1726	Antenna, tube (1)/ vinyl antenna cap (1)/ wire retainer (1)
2260	**BEC assembly (complete)**
3790	Gear adapter, fixed
2072A	Gear set (for 2070, 2075 servos)
2252	**Gear set, metal (for 2250, 2255 servos)**
3785	Motor, Titan® 12T (12-Turn, 550 size)
3351R	**Motor, Velineon® 3500, brushless (assembled with 12-gauge wire and gold-plated bullet connectors)**
3931	Screws, 3x8mm flat-head machine (hex drive) (6)
2254	**Servo case, aluminum (blue-anodized) (middle) (for 2250 servo)**
2253	**Servo case, aluminum (red-anodized) (middle) (for 2255 servo)**
2251	**Servo case, plastic (top, middle, bottom)/ gaskets/ hardware (for 2250, 2255 servos)**
2074	Servo case/gaskets (for 2056 and 2075 waterproof servos)
2075R	**Servo, digital high-speed, metal gear (ball bearing), waterproof**
2075	Servo, digital high-torque (ball bearing), waterproof
2250	**Servo, digital high-torque 330 coreless, metal gear (ball bearing), waterproof**
2255	**Servo, digital high-torque 400 brushless, metal gear (ball bearing), waterproof**
2075X	**Servo, digital high-torque, metal gear (ball bearing), waterproof**
3350R	**Velineon® VXL-3s Brushless Power System, waterproof (includes VXL-3s waterproof ESC, Velineon 3500 motor, and speed control mounting plate (part #3725R))**
3355R	**Velineon® VXL-3s Electronic Speed Control, waterproof (brushless) (fwd/rev/brake)**
3018R	XL-5 Electronic Speed Control, waterproof (land version, low-voltage detection, fwd/rev/brake)

Radio System, Batteries & Chargers

2842X	**5000mAh 7.4v 2-Cell 25C LiPo Battery**
2843X	**5800mAh 7.4v 2-Cell 25C LiPo Battery**
2869X	**7600mAh 7.4v 2-Cell 25C LiPo Battery**
2976	**AC to DC converter, 40W**
2938X	**Adapter, Traxxas® iD® LiPo battery (adapts Traxxas iD batteries to separate balance ports)**
5526	Antenna crimp nut, aluminum (blue-anodized)/ antenna nut tools
5526R	**Antenna crimp nut, aluminum (red-anodized)/ antenna nut tools**
2943	**Battery charge indicators (green (4), blue (4), grey (4))**
6548	Battery door, transmitter (replacement for #6516, 6517, 6528, 6529, 6530 transmitters)
2914	**Battery, Power Cell AA Alkaline (4)**
2923X	Battery, Power Cell, 3000mAh (NiMH, 7-C flat, 8.4V)
2926X	**Battery, Power Cell, 3000mAh (NiMH, 7-C hump, 8.4V)**
2940X	**Battery, Series 3 Power Cell, 3300mAh (NiMH, 7-C flat, 8.4V)**
2941X	**Battery, Series 3 Power Cell, 3300mAh (NiMH, 7-C hump, 8.4V)**
2950X	**Battery, Series 4 Power Cell, 4200mAh (NiMH, 7-C flat, 8.4V)**
2951X	**Battery, Series 4 Power Cell, 4200mAh (NiMH, 7-C hump, 8.4V)**
2960X	**Battery, Series 5 Power Cell, 5000mAh (NiMH, 7-C flat, 8.4V)**
2961X	**Battery, Series 5 Power Cell, 5000mAh (NiMH, 7-C hump, 8.4V)**
2983	**Battery/charger completer pack (includes #2969 2-amp NiMH peak detecting AC charger (1), #2923X 3000mAh 8.4V 7-cell NiMH battery (1))**
2992	**Battery/charger completer pack (includes #2970 iD® charger (1), #2843X 5800mAh 7.4V 2-cell 25C LiPo battery (1))**
2260	**BEC assembly (complete)**
2975	Charger, DC, 4 amp (6 - 7 cell, 7.2 - 8.4 volt, NiMH)
2972	**Charger, EZ-Peak® Dual, 100W, NiMH/LiPo with iD® Auto Battery Identification**

BFGoodrich® Tires Trademarks are used under license from Michelin Group Companies.

2973 **Charger, EZ-Peak® Live Dual, 200W, NiMH/LiPo with iD® Auto Battery Identification**
2971 **Charger, EZ-Peak® Live, 100W, NiMH/LiPo with iD® Auto Battery Identification**
2970 **Charger, EZ-Peak® Plus, 4 amp, NiMH/LiPo with iD® Auto Battery Identification**
6525 **Communication link, telemetry expander**
6541 **Connector, power tap (with cable) (long)/ wire tie**
2978 **Fuse, charger, 5A (2) (for #2974, 2975, 2977)**
2072A Gear set (for 2070, 2075 servos)
2252 **Gear set, metal (for 2250, 2255 servos)**
2968X **LiPo cell voltage checker/balancer (includes #2938X adapter for Traxxas® iD® batteries)**
2968 **LiPo cell voltage checker/balancer (requires #2938X adapter for Traxxas® iD® batteries)**
6554 **Mount, telemetry expander (fits Bandit, Rustler®, Slash 2WD)**
6535 **Mount, temperature sensor (electric motors)/ wire tie/ thermal pad**
6519 Receiver, micro, TQ 2.4GHz (3-channel)
6518 **Receiver, micro, TQi 2.4GHz with telemetry (5-channel)**
6552 **Seal kit, expander box (includes o-ring, seals, and silicone grease)**
6526 **Sensor, auto-detectable, temperature**
6527 **Sensor, auto-detectable, voltage**
6520 **Sensor, RPM (long)/ 3x4mm BCS (2)/ 3x4 GS (1)**
6521 **Sensor, temperature and voltage (long)**
2254 **Servo case, aluminum (blue-anodized) (middle) (for 2250 servo)**
2253 **Servo case, aluminum (red-anodized) (middle) (for 2255 servo)**
2251 **Servo case, plastic (top, middle, bottom)/ gaskets/ hardware (for 2250, 2255 servos)**
2074 Servo case/gaskets (for 2056 and 2075 waterproof servos)
2075R **Servo, digital high-speed, metal gear (ball bearing), waterproof**
2075 Servo, digital high-torque (ball bearing), waterproof
2250 **Servo, digital high-torque 330 coreless, metal gear (ball bearing), waterproof**
2255 **Servo, digital high-torque 400 brushless, metal gear (ball bearing), waterproof**
2075X **Servo, digital high-torque, metal gear (ball bearing), waterproof**
6553X **Telemetry expander 2.0 and GPS module 2.0, TQi radio system**
6550X **Telemetry expander 2.0, TQi radio system (for use only with #6551X GPS module)**
6551X **Telemetry GPS module 2.0, TQi radio system (for use only with #6550X telemetry expander)**
6538 **Telemetry trigger magnet holders, spur gear/ magnet, 5x2mm (1)/ 3x8mm CCS (3)/ 3x10mm CCS (3)**
6540 **Telemetry trigger magnet, 5X2mm (1)**
6509R **TQi 2.4 GHz High Output radio system, 2-channel, Traxxas Link™ enabled, TSM (2-ch transmitter, 5-ch micro receiver)**
6507R **TQi 2.4 GHz High Output radio system, 4-channel with Traxxas Link™ Wireless Module, TSM (4-ch transmitter, 5-ch micro receiver)**
6516 Transmitter, TQ 2.4GHz, 2-channel (transmitter only)
6528 **Transmitter, TQi Traxxas Link™ enabled, 2.4GHz high output, 2-channel (transmitter only)**
6529 **Transmitter, TQi Traxxas Link™ enabled, 2.4GHz high output, 3-channel (transmitter only)**
6530 **Transmitter, TQi Traxxas Link™ enabled, 2.4GHz high output, 4-channel (transmitter only)**
6511 **Traxxas Link™ Wireless Module**
3355R **Velineon® VXL-3s Electronic Speed Control, waterproof (brushless) (fwd/rev/brake)**
6537 **Wire retainers, gear cover/ 3x4mm BCS (2)**
3018R XL-5 Electronic Speed Control, waterproof (land version, low-voltage detection, fwd/rev/brake)

Ready-To-Race Model

58034-1 Slash: 1/10-Scale 2WD Short Course Racing Truck with TQ 2.4GHz radio system

Rear Suspension

5116 Ball bearings, blue rubber sealed (5x11x4mm) (2)
3644X **Camber links, rear (TUBES blue-anodized, 7075-T6 aluminum, stronger than titanium) (73mm) (2)/ rod ends (4)/ aluminum wrench (1) (#2579 3x15 BCS (4) required for installation)**
3644G **Camber links, rear (TUBES green-anodized 7075-T6 aluminum, stronger than titanium) (73mm) (2)/ rod ends (4)/ aluminum wrench (1) (#2579 3x15 BCS (4) required for installation)**
3644R **Camber links, rear (TUBES red-anodized, 7075-T6 aluminum, stronger than titanium) (73mm) (2)/ rod ends (4)/ aluminum wrench (1) (#2579 3x15 BCS (4) required for installation)**
1951 Half shafts, long truck (external-splined (2) & internal-splined (2)/ metal U-joints (4)
3638 Shock tower (rear)
3752 Stub axle carriers (2) (requires 5x11x4mm bearings)
3652A **Stub axle carriers, Rustler®/Stampede®/Bandit (2), 6061-T6 aluminum (blue-anodized)/ 5x11mm ball bearings (4)**
3652G **Stub axle carriers, Rustler®/Stampede®/Bandit (2), 6061-T6 aluminum (green-anodized)/ 5x11mm ball bearings (4)**
3652P **Stub axle carriers, Rustler®/Stampede®/Bandit (2), 6061-T6 aluminum (pink-anodized)/ 5x11mm ball bearings (4)**
3652P **Stub axle carriers, Rustler®/Stampede®/Bandit (2), 6061-T6 aluminum (pink-anodized)/ 5x11mm ball bearings (4)**
3652X **Stub axle carriers, Rustler®/Stampede®/Bandit (2), 6061-T6 aluminum (red-anodized)/ 5x11mm ball bearings (4)**
2753X Stub axles, rear (2)
2555 Suspension arms, (rear) (2)
2555X **Suspension arms, black, rear, heavy duty (2)**
2555A **Suspension arms, blue, rear, heavy duty (2)**
2555G **Suspension arms, green, rear, heavy duty (2)**
2555T **Suspension arms, orange, rear, heavy duty (2)**
2555R **Suspension arms, red, rear, heavy duty (2)**
2555L **Suspension arms, white, rear, heavy duty (2)**
3640 Suspension screw pin set, steel (hex drive) (requires part #2640 for a complete suspension pin set) (Bandit, Rustler®, Stampede®)
3644 Turnbuckles, camber link, 39mm (69mm center to center) (assembled with rod ends and hollow balls) (1 left, 1 right) (fits front & rear on Slash)

Shocks (Pro-level Aluminum)

2664 **Big Bore shock cylinder (long) (1)**
2666 **Big Bore shock cylinder (XX-long) (1)**
5862 **Big Bore shocks (hard-anodized & PTFE-coated T6 aluminum) (assembled with TiN shafts and springs) (front & rear) (4)**
2660 **Big Bore shocks (long) (hard-anodized & PTFE-coated T6 aluminum) (assembled with TiN shafts) w/o springs (front) (2)**
2662 **Big Bore shocks (XX-long) (hard-anodized & PTFE-coated T6 aluminum) (assembled with TiN shafts) w/o springs (rear) (2)**
2669 **Piston head set (2-hole (2)/ 3-hole (2))/ shock mounting bushings & washers (2) (Big Bore Shocks)**
2362 **Rebuild kit, Ultra shocks (for 2 shocks)**
1942 Rod ends (16 long & 4 short)/ hollow ball connectors (18)/ ball screws (2)
2742X Rod ends, short (6)/ hollow balls (6)
2667 **Shock caps, aluminum (Big Bore Shocks) (2)**
1664T **Shock shafts, hardened steel, titanium nitride coated (long) (2)**
2656T **Shock shafts, hardened steel, titanium nitride coated (xx-long) (2)**
1664 Shock shafts, steel, chrome finish (long) (2)
2656 Shock shafts, steel, chrome finish (xx-long) (2)
1765 Silicone diaphragms (4)
1666 Silicone shock oil (30 wt)
2668 **Spring retainers, upper & lower (2)/ spring pre-load spacers: 1mm (4)/ 1.5mm (2)/ 2mm (2)/ 4mm (2)/ 8mm (2) (Big Bore Shocks)**
5860 **Springs, front (white) (progressive rate) (2) (fits #5862 aluminum Big Bore shocks)**
5859 **Springs, rear (white) (progressive rate) (2) (fits #5862 aluminum Big Bore shocks)**

Shocks (Ultra Shocks)

3765A Body, Ultra Shock(s) (long) (grey) (2)
3766A Body, Ultra Shock(s) (XXL) (grey) (2)
2362 **Rebuild kit, Ultra shocks (for 2 shocks)**
1942 Rod ends (16 long & 4 short)/ hollow ball connectors (18)/ ball screws (2)
2742X Rod ends, short (6)/ hollow balls (6)
3767 **Shock caps (2)/ shock bottoms (2)**
8361 Shock caps (black) (4) (assembled with hollow balls)
3767A **Shock caps, aluminum (blue-anodized) (4) (fits all Ultra Shocks)**
3767G **Shock caps, aluminum (green-anodized) (4) (fits all Ultra Shocks)**
3767P **Shock caps, aluminum (pink-anodized) (4) (fits all Ultra Shocks)**
3767X **Shock caps, aluminum (red-anodized) (4) (fits all Ultra Shocks)**
1664T **Shock shafts, hardened steel, titanium nitride coated (long) (2)**
2656T **Shock shafts, hardened steel, titanium nitride coated (xx-long) (2)**
1664 **Shock shafts, steel, chrome finish (long) (2)**
2656 Shock shafts, steel, chrome finish (xx-long) (2)
3642X **Shoulder screws, Ultra Shocks (3x12 hex drive) (6)**
1765 Silicone diaphragms (4)
1666 Silicone shock oil (30 wt)
3769 Spring pre-load spacers: 1mm (4)/ 2mm (2)/ 4mm (2)/ 8mm (2)
3768 Spring retainers, upper & lower (2)/ piston head set (2-hole (2)/ 3-hole (2))
2458 **Springs, front (black) (2)**
2458P **Springs, front (pink) (2)**
5857P **Springs, front (pink) (progressive rate) (2)**
2458A **Springs, front (white) (2)**

BFGoodrich® Tires Trademarks are used under license from Michelin Group Companies.

SLASH™ (58034-1)

5857 Springs, front (white) (progressive rate) (2)
3757 Springs, rear (black) (2)
3757T Springs, rear (blue) (2)
3757A Springs, rear (green) (2)
3757P Springs, rear (pink) (2)
5858P Springs, rear (pink) (progressive rate) (2)
3757X Springs, rear (white) (2)
5858 Springs, rear (white) (progressive rate) (2)
4957 Springs, red (for Ultra Shocks only) (2.5 rate) (f/r) (2)
3760 Ultra Shocks (black) (long) (complete w/ spring pre-load spacers & springs) (front) (2)
3762 Ultra Shocks (black) (xx-long) (complete w/ spring pre-load spacers & springs) (rear) (2)
3760A Ultra Shocks (grey) (long) (complete w/ spring pre-load spacers & springs) (2)
3762A Ultra Shocks (grey) (xx-long) (complete w/ spring pre-load spacers & springs) (rear) (2)

Slipper Clutch Components

3793 Input shaft (slipper shaft) / spring pin
5552X Rebuild kit, slipper clutch (steel disc/ friction pads (3)/ spring (2)/ pin/ 4.0mm NL (1)/ 5.0mm NL (1))
2554 Screws, 3x6mm cap-head machine (hex drive) (6)
5556 Slipper pressure plate & hub (aluminum alloy)

Spur Gears & Pinion Gears

3790 Gear adapter, fixed
2416 Gear, 16-T pinion (48-pitch) / set screw
1918 Gear, 18-T pinion (48-pitch) / set screw
2419 Gear, 19-T pinion (48-pitch) / set screw
2423 Gear, 23-T pinion (48-pitch) / set screw
2426 Gear, 26-T pinion (48-pitch)/set screw
2431 Gear, 31-T pinion (48-pitch) / set screw
4725 Gear, pinion (25-tooth) (48-pitch) / set screw
4728 Gear, pinion (28-tooth) (48-pitch)/ set screw
4683 Spur gear, 83-tooth (48-pitch) (for models with Torque-Control slipper clutch)
4686 Spur gear, 86-tooth (48-pitch) (for models with Torque-Control slipper clutch)
4690 Spur gear, 90-tooth (48-pitch) (for models with Torque-Control slipper clutch)

Steering Components

2728 Ball bearings (5x8x2.5mm) (2)
2545 Bellcrank bushings (plastic) (5x8x2.5mm) (4)
3643X Camber links, front (TUBES blue-anodized, 7075-T6 aluminum, stronger than titanium) (83mm) (2)/ rod ends (4)/ aluminum wrench (1) (#2579 3x15 BCS (4) required for installation)
3643G Camber links, front (TUBES green-anodized, 7075-T6 aluminum, stronger than titanium) (83mm) (2)/ rod ends (4)/ aluminum wrench (1) (#2579 3x15 BCS (4) required for installation)
3643R Camber links, front (TUBES red-anodized, 7075-T6 aluminum, stronger than titanium) (83mm) (2)/ rod ends (4)/ aluminum wrench (1) (#2579 3x15 BCS (4) required for installation)
1985 PTFE-coated washers, 5x8x0.5mm (20) (use with ball bearings)
2742 Rod ends, long (6)/ hollow ball connectors (6)
5347 Rod ends, Revo® (large) with hollow balls (12)
3744 Servo saver w/adapters
3742 Shoulder screws, steering bellcranks (3x30mm cap-head machine) (2)/ draglink shoulder screws (chrome) (2)
3743 Steering bellcranks (l&r)/ draglink
3743A Steering bellcranks, drag link (blue-anodized 6061-T6 aluminum)/ 5x8mm ball bearings (4)/ hardware (assembled)
3743G Steering bellcranks, drag link (green-anodized 6061-T6 aluminum)/ 5x8mm ball bearings (4)/ hardware (assembled)
3743P Steering bellcranks, drag link (pink-anodized 6061-T6 aluminum)/ 5x8mm ball bearings (4)/ hardware (assembled)
3743X Steering bellcranks, drag link (red-anodized 6061-T6 aluminum)/ 5x8mm ball bearings (4)/ hardware (assembled)
6845X Steering bellcranks/ servo saver/ servo saver spring/ servo spring retainer/servo horn, steering
1935 Turnbuckles, 36mm (2)
3139A Turnbuckles, aluminum (blue-anodized), toe links, 59mm (2) (assembled w/ rod ends & hollow balls) (requires 5mm aluminum wrench #5477)
3139X Turnbuckles, aluminum (red-anodized), toe links, 59mm (2) (assembled with rod ends & hollow balls) (requires 5mm aluminum wrench #5477)
3745 Turnbuckles, toe link, 59mm (78mm center to center) (2) (assembled with rod ends and hollow balls)
2746 Washers, 3x6mm metal (12)

Suspension Linkage

3643X Camber links, front (TUBES blue-anodized, 7075-T6 aluminum, stronger than titanium) (83mm) (2)/ rod ends (4)/ aluminum wrench (1) (#2579 3x15 BCS (4) required for installation)
3643G Camber links, front (TUBES green-anodized, 7075-T6 aluminum, stronger than titanium) (83mm) (2)/ rod ends (4)/ aluminum wrench (1) (#2579 3x15 BCS (4) required for installation)
3643R Camber links, front (TUBES red-anodized, 7075-T6 aluminum, stronger than titanium) (83mm) (2)/ rod ends (4)/ aluminum wrench (1) (#2579 3x15 BCS (4) required for installation)
3644X Camber links, rear (TUBES blue-anodized, 7075-T6 aluminum, stronger than titanium) (73mm) (2)/ rod ends (4)/ aluminum wrench (1) (#2579 3x15 BCS (4) required for installation)
3644G Camber links, rear (TUBES green-anodized 7075-T6 aluminum, stronger than titanium) (73mm) (2)/ rod ends (4)/ aluminum wrench (1) (#2579 3x15 BCS (4) required for installation)
3644R Camber links, rear (TUBES red-anodized, 7075-T6 aluminum, stronger than titanium) (73mm) (2)/ rod ends (4)/ aluminum wrench (1) (#2579 3x15 BCS (4) required for installation)
5525 Rod ends (12)/ hollow balls (12)
5347 Rod ends, Revo® (large) with hollow balls (12)
3739 Screw pin set (Rustler®/ Bandit/ Stampede®)
5529 Shim set, 3x7x1mm (2), 3x6x0.5mm (4), 3x7x2mm (2)/ hollow balls, captured (4)
2640 Suspension pins, 44mm (2) w/ e-clips
3640 Suspension screw pin set, steel (hex drive) (requires part #2640 for a complete suspension pin set) (Bandit, Rustler®, Stampede®)
3737A Turnbuckle, aluminum (blue-anodized), 39mm (1)(assembled w/rod ends)/hollow balls (2) (fits front & rear on Slash)
3737 Turnbuckle, aluminum (red-anodized), 39mm (1) (assembled w/rod ends)/hollow balls (2) (fits front & rear on Slash)
3741A Turnbuckles, aluminum (blue-anodized), camber links, front, 39mm (2), rear, 49mm (2) (assembled w/rod ends & hollow balls)/ wrench
3139A Turnbuckles, aluminum (blue-anodized), toe links, 59mm (2) (assembled w/ rod ends & hollow balls) (requires 5mm aluminum wrench #5477)
3741X Turnbuckles, aluminum (red-anodized), camber links, front, 39mm (2), rear, 49mm (2) (assembled w/ rod ends & hollow balls)/wrench
3139X Turnbuckles, aluminum (red-anodized), toe links, 59mm (2) (assembled with rod ends & hollow balls) (requires 5mm aluminum wrench #5477)
3644 Turnbuckles, camber link, 39mm (69mm center to center) (assembled with rod ends and hollow balls) (1 left, 1 right) (fits front & rear on Slash)
3745 Turnbuckles, toe link, 59mm (78mm center to center) (2) (assembled with rod ends and hollow balls)

Team Traxxas Items

2514 Decal sheet, racing sponsors
6160X DVD, Maxx® Power! Full Throttle Action (sleeve)
9950 Official Team Traxxas® racing decal set (flag logo/ 6-color)
9909 Traxxas® racing banner, red & black (3x7 feet)

Tires & Wheels

5116 Ball bearings, blue rubber sealed (5x11x4mm) (2)
5854 Hub retainer, 17mm hubs, M4 X 0.7 (4) (use with #5853X, #6856X, #6469)
3647 Nuts, 4mm flanged nylon locking (steel, serrated) (8)
1747R Nuts, aluminum, flanged, serrated (4mm) (blue-anodized) (4)
1747G Nuts, aluminum, flanged, serrated (4mm) (green-anodized) (4)
1747P Nuts, aluminum, flanged, serrated (4mm) (pink-anodized) (4)
1747P Nuts, aluminum, flanged, serrated (4mm) (pink-anodized) (4)
1985 PTFE-coated washers, 5x8x0.5mm (20) (use with ball bearings)
1647 Silicone grease
2754 Stub axle pins (4)
5864 Tire & wheel assy, glued (SCT black, orange beadlock wheels, SCT off-road racing tires, foam inserts) (2) (2WD front)
5885A Tire & wheel assy, glued (SCT Split-Spoke, black, blue beadlock wheels, BFGoodrich® Mud-Terrain™ T/A® KM2 tires, inserts) (2) (2WD Front)
5883A Tire & wheel assy, glued (SCT Split-Spoke, black, blue beadlock wheels, BFGoodrich® Mud-Terrain™ T/A® KM2 tire, inserts) (2) (4WD f/r, 2WD rear)
5880X Tires & wheels, assembled, glued (SCT satin chrome, beadlock style wheels, Kumho tires, foam inserts) (2) (4WD front/rear, 2WD rear only)
5880 Tires & wheels, assembled, glued (SCT satin chrome, black beadlock style wheels, Kumho tires, foam inserts) (2) (4WD front/rear, 2WD rear only)
5882 Tires & wheels, assembled, glued (SCT Split-Spoke satin chrome, black beadlock style wheels, Kumho tires, foam inserts) (2) (2WD front)

BFGoodrich® Tires Trademarks are used under license from Michelin Group Companies

6873X **Tires & wheels, assembled, glued (S1 ultra-soft off-road racing compound) (SCT Split-Spoke satin chrome, black beadlock style wheels, BFG Mud-Terrain tires, foam inserts) (2) (4WD front/rear, 2WD rear only)**

5882R **Tires & wheels, assembled, glued (S1 ultra-soft off-road racing compound) (SCT Split-Spoke satin chrome, black beadlock style wheels, Kumho tires, foam inserts) (2) (2WD front)**

6874R **Tires & wheels, assembled, glued (S1 ultra-soft off-road racing compound) (SCT Split-Spoke satin chrome, black beadlock style wheels, Kumho tires, foam inserts) (2) (4WD front/rear, 2WD rear only)**

5877R **Tires & wheels, assembled, glued (S1 ultra-soft, off-road racing compound) (SCT Split-Spoke chrome, red beadlock style wheels, BFGoodrich® Mud-Terrain™ T/A® KM2 tires) (2) (2WD front)**

6873R **Tires & wheels, assembled, glued (S1 ultra-soft, off-road racing compound) (SCT Split-Spoke chrome, red beadlock style wheels, BFGoodrich® Mud-Terrain™ T/A® KM2 tires, foam inserts) (2) (4WD f/r, 2WD rear)**

5863 Tires & wheels, assembled, glued (SCT black, orange beadlock wheels, dual profile (2.2" outer, 3.0" inner), SCT off-road racing tire, foam inserts) (2) (4WD f/r, 2WD rear) (TSM® rated)

5869 **Tires & wheels, assembled, glued (SCT chrome, red beadlock style wheels, BFGoodrich® Mud-Terrain™ T/A® KM2 tires, foam inserts) (2) (2WD front)**

5867 **Tires & wheels, assembled, glued (SCT chrome, red beadlock style wheels, BFGoodrich® Mud-Terrain™ T/A® KM2 tires, foam inserts) (2)(4WD front/rear, 2WD rear only)**

5873R **Tires & wheels, assembled, glued (SCT satin chrome red beadlock wheels, ultra-soft S1 compound off-road racing tires, inserts) (2) (2WD rear, 4WD f/r)**

5881X **Tires & wheels, assembled, glued (SCT satin chrome, beadlock style wheels, Kumho tires, foam inserts) (2) (2WD front)**

5875 Tires & wheels, assembled, glued (SCT satin chrome, beadlock style wheels, SCT off-road racing tires, foam inserts) (2) (2WD front)

5873 Tires & wheels, assembled, glued (SCT satin chrome, beadlock style wheels, SCT off-road racing tires, foam inserts) (2) (4WD front/rear, 2WD rear only) (TSM rated)

5878 **Tires & wheels, assembled, glued (SCT satin chrome, black beadlock style wheels, BFGoodrich® Mud-Terrain™ T/A® KM2 tires, foam inserts) (2)(4WD front/rear, 2WD rear only)**

5881 **Tires & wheels, assembled, glued (SCT satin chrome, black beadlock style wheels, Kumho tires, foam inserts) (2) (2WD front)**

5875X **Tires & wheels, assembled, glued (SCT satin chrome, black beadlock style wheels, SCT off-road racing tires, foam inserts) (2) (2WD front)**

5873X **Tires & wheels, assembled, glued (SCT satin chrome, black beadlock style wheels, SCT off-road racing tires, foam inserts) (2) (4WD front/rear, 2WD rear only)**

5873A **Tires & wheels, assembled, glued (SCT satin chrome, red-beadlock style wheels, SCT off-road tires, foam inserts) (2) (4WD front/rear, 2WD rear only)**

6873A **Tires & wheels, assembled, glued (SCT Split-Spoke chrome, red beadlock style wheels, BFGoodrich® Mud-Terrain™ T/A® KM2 tires, foam inserts) (2) (4WD f/r, 2WD rear)**

5891 **Tires & wheels, assembled, glued (SCT Split-Spoke satin chrome, beadlock style wheels, paddle tires, foam inserts) (2) (4WD front/rear, 2WD rear only) (TSM rated)**

6873 **Tires & wheels, assembled, glued (SCT Split-Spoke satin chrome, black beadlock style wheels, BFGoodrich® Mud-Terrain™ T/A® KM2 tires, foam inserts) (2) (4WD f/r, 2WD rear) (TSM® rated)**

6874 **Tires & wheels, assembled, glued (SCT Split-Spoke satin chrome, black beadlock style wheels, Kumho tires, foam inserts) (2) (4WD front/rear, 2WD rear only)**

5885 **Tires & wheels, assembled, glued (SCT Split-Spoke, black, satin chrome beadlock wheels, BFGoodrich® Mud-Terrain™ T/A® KM2 tires, foam inserts) (2) (2WD Front)**

5883 **Tires & wheels, assembled, glued (SCT Split-Spoke, black, satin chrome beadlock wheels, BFGoodrich® Mud-Terrain™ T/A® KM2 tire, foam inserts) (2) (4WD f/r, 2WD rear)**

5877A **Tires & wheels, assembled, glued (SCT Split-Spoke, chrome red beadlock style wheels, BFGoodrich® Mud-Terrain™ T/A® KM2 tires, foam inserts) (2) (2WD front)**

5877 **Tires & wheels, assembled, glued (SCT Split-Spoke, satin chrome, black beadlock wheels, BFGoodrich® Mud-Terrain™ T/A® KM2 tires, foam inserts) (2) (2WD front)**

5865 **Tires & wheels, assembled, glued (SCT, chrome, green beadlock wheel, BFGoodrich® Mud-Terrain™ T/A® KM2 tire, foam inserts) (2) (2WD front only)**

6876 **Tires & wheels, assembled, glued (SCT, chrome, green beadlock wheel, BFGoodrich® Mud-Terrain™ T/A® KM2 tire, foam inserts) (2) (4WD front/rear, 2WD rear only)**

6871 **Tires, BFGoodrich® Mud-Terrain T/A® KM2 (dual profile 4.3x1.7-2.2/3.0") (2)/ foam inserts (2)**

6871R **Tires, BFGoodrich® Mud-Terrain T/A® KM2 , ultra-soft (S1 off-road racing compound) (dual profile 4.3x1.7- 2.2/3.0") (2)/ foam inserts (2)**

6870 **Tires, Kumho (dual profile 4.3x1.7- 2.2/3.0") (2)/ foam inserts (2)**

6870R **Tires, Kumho, ultra-soft (S1 off-road racing compound) (dual profile 4.3x1.7- 2.2/3.0") (2)/ foam inserts (2)**

5871 Tires, off-road racing, SCT dual profile 4.3x1.7- 2.2/3.0" (2)/ foam inserts (2)

5871R **Tires, ultra-soft, S1 compound for off-road racing, SCT dual profile 4.3x1.7- 2.2/3.0" (2)/ foam inserts (2)**

1654 Wheel hubs, hex (rear) (2)/ stub axle pins (2)

3654 Wheel hubs, hex (tall offset, Rustler®/Stampede® front) (2)/ axle pins (2.5x10mm) (2)

5853X **Wheel hubs, splined, 17mm, short (2), long (2)/wheel nuts, splined, 17mm (4) (blue-anodized)/ hub retainer M4x0.7 (4)/axle pin (4)/wrench, 5mm**

5353 **Wheel nuts, splined, 17mm (blue-anodized) (4)**

5480X **Wheel wrench, splined, 17mm**

5870X Wheels, SCT black, orange beadlock style, dual profile (2.2" outer, 3.0" inner) (2WD front) (2)

5868X Wheels, SCT black, orange beadlock style, dual profile (2.2" outer, 3.0" inner) (4WD f/r, 2WD rear) (2)

5870 Wheels, SCT chrome, red beadlock style, dual profile (2.2" outer, 3.0" inner) (2WD front) (2)

5868 Wheels, SCT chrome, red beadlock style, dual profile (2.2" outer, 3.0" inner) (4WD front/rear, 2WD rear only) (2)

5874 Wheels, SCT satin chrome, beadlock style, dual profile (2.2" outer, 3.0" inner) (2WD front)

5872 Wheels, SCT satin chrome, beadlock style, dual profile (2.2" outer, 3.0" inner) (4WD front/rear, 2WD rear only)

5872X **Wheels, SCT satin chrome, black beadlock style SCT, dual profile (2.2" outer, 3.0" inner) (4WD front/rear, 2WD rear only) (2)**

5874X **Wheels, SCT satin chrome, black beadlock style, dual profile (2.2" outer, 3.0" inner) (2WD front) (2)**

5874A **Wheels, SCT satin chrome, red beadlock style, dual profile (2.2" outer, 3.0" inner) (2WD front) (2)**

5872A **Wheels, SCT satin chrome, red beadlock style, dual profile (2.2" outer, 3.0" inner) (4WD front/rear, 2WD rear only) (2)**

5886A **Wheels, SCT Split-Spoke, black, blue beadlock style, dual profile (2.2" outer, 3.0" inner) (2WD front) (2)**

5884A **Wheels, SCT Split-Spoke, black, blue beadlock style, dual profile (2.2" outer, 3.0" inner) (4WD f/r, 2WD rear) (2)**

5886 Wheels, SCT Split-Spoke, black, satin chrome beadlock style, dual profile (2.2" outer, 3.0" inner) (2WD front) (2)

5884 Wheels, SCT Split-Spoke, black, satin chrome beadlock style, dual profile (2.2" outer, 3.0" inner) (4WD f/r, 2WD rear) (2)

6872X **Wheels, SCT Split-Spoke, chrome, green beadlock style, dual profile (2.2" outer, 3.0" inner) (4WD front/rear, 2WD rear) (2)**

5876A Wheels, SCT Split-Spoke, chrome, red beadlock style, dual profile (2.2" outer, 3.0" inner) (2WD front) (2)

6872A Wheels, SCT Split-Spoke, chrome, red beadlock style, dual profile (2.2" outer, 3.0" inner) (4WD front/rear, 2WD rear) (2)

5876 **Wheels, SCT Split-Spoke, satin chrome, black beadlock style, dual profile (2.2" outer, 3.0" inner) (2WD front) (2)**

6872 **Wheels, SCT Split-Spoke, satin chrome, black beadlock style, dual profile (2.2" outer, 3.0" inner) (4WD front/rear, 2WD rear only) (2)**

5866 **Wheels, SCT, chrome, green beadlock style, dual profile (2.2" outer, 3.0" inner) (2) (2WD front only)**

6875 **Wheels, SCT, chrome, green beadlock style, dual profile (2.2" outer, 3.0" inner) (2) (4WD front/rear, 2WD rear only)**

Transmission Components

1552 **Motor screws (3x8mm hex cap) (6)/washers (6)/ wrench**

4607 **Ball bearings (5x11x4mm) (8)**

5116 Ball bearings, blue rubber sealed (5x11x4mm) (2)

3792 Cover, gear/ rubber gear cover plug/ 3x6 RM (2)

3790 Gear adapter, fixed

3691 **Gearbox halves (l&r) (black) w/ idler gear shaft**

3691A Gearbox halves (l&r) (grey) w/ idler gear shaft

5148 Grease, white lithium

3696 Idler gear, steel (30-tooth)

3793 Input shaft (slipper shaft) / spring pin

2381X Main diff with steel ring gear/ side cover plate/ screws (Bandit, Stampede®, Rustler®)

2382 Planet gears (4)/ planet shafts (4)/ sun gears (2)/sun gear alignment shaft (1) all hardened steel

2388X Planetary gear differential with steel ring gear (complete) (fits Bandit, Stampede®, Rustler®)

5552X Rebuild kit, slipper clutch (steel disc/ friction pads (3)/ spring (2)/ pin/ 4.0mm NL (1)/ 5.0mm NL (1))

2554 Screws, 3x6mm cap-head machine (hex drive) (6)

3931 Screws, 3x8mm flat-head machine (hex drive) (6)

BFGoodrich® Tires Trademarks are used under license from Michelin Group Companies.

SLASH™ (58034-1)

1647	Silicone grease
5556	Slipper pressure plate & hub (aluminum alloy)
3195	Top drive gear, steel (22-tooth)

Traxxas Tools

3433X	**Body reamer (aluminum handle)**
3433	**Body reamer (plastic handle)**
3436	**Cap, body reamer**
3432	**Scissors, curved tip**
3431	**Scissors, straight tip**
8712	**Speed Bit Essentials Set, hex and nut driver, 7-piece, includes premium handle (medium), travel pouch, hex drivers (straight: 1.5mm, 2.0mm, 2.5mm) and nut drivers (5.0mm, 5.5mm, 7.0mm, and 8.0mm), 1/4" drive**
8721	**Speed bit handle, medium (one piece)**
8720	**Speed bit handle, premium, large (rubber overmold)**
8722	**Speed bit handle, premium, medium (rubber overmold)**
8710	**Speed Bit Master Set, hex and nut driver, 13-piece, includes premium handle (medium), travel pouch, hex drivers (straight: 1.5mm, 2.0mm, 2.5mm, 3.0mm), (ball-end: 2.0mm, 2.5mm, 3.0mm), and nut drivers (4.00mm, 4.50mm, 5.00mm, 5.50mm, 7.00mm, 8.00mm),**
8711	**Speed Bit Master Set, hex driver, 7-piece straight and ball end, includes premium handle (medium), travel pouch, hex drivers (straight: 1.5mm, 2.0mm, 2.5mm, 3.0mm) (ball end: 2.0mm, 2.5mm, 3.0mm), 1/4" drive**
8719	**Speed Bit Master Set, nut driver, 6-piece, includes premium handle (medium), travel pouch, and nut drivers (4.0mm, 4.5mm, 5.0mm, 5.5mm, 7.0mm, 8.0mm), 1/4" drive**
8716	**Speed Bit Set, hex driver, 2-piece ball-end (2.0mm, 2.5mm), 1/4" drive**
8716X	**Speed Bit Set, hex driver, 3-piece ball-end (2.0mm, 2.5mm, 3.0mm), 1/4" drive**
8715	**Speed Bit Set, hex driver, 3-piece straight (1.5mm, 2.0mm, 2.5mm), 1/4" drive**
8715X	**Speed Bit Set, hex driver, 4-piece straight (1.5mm, 2.0mm, 2.5mm, 3.0mm), 1/4" drive**
3415	**Tool set with pouch (includes 1.5mm, 2.0mm, 2.5mm, 3.0mm, 3.5mm, 4mm drivers/ 4mm, 5mm, 5.5mm, 7mm and 8mm nut drivers/ 2mm, 4mm, and 5mm slotted screwdrivers/ #00 Phillips, #0 Phillips, and #1 Phillips screwdrivers/ 4mm and 8mm wrench/ driver handle**

Turnbuckles & Threaded Rods

3643X	**Camber links, front (TUBES blue-anodized, 7075-T6 aluminum, stronger than titanium) (83mm) (2)/ rod ends (4)/ aluminum wrench (1) (#2579 3x15 BCS (4) required for installation)**
3643G	**Camber links, front (TUBES green-anodized, 7075-T6 aluminum, stronger than titanium) (83mm) (2)/ rod ends (4)/ aluminum wrench (1) (#2579 3x15 BCS (4) required for installation)**
3643R	**Camber links, front (TUBES red-anodized, 7075-T6 aluminum, stronger than titanium) (83mm) (2)/ rod ends (4)/ aluminum wrench (1) (#2579 3x15 BCS (4) required for installation)**
3644X	**Camber links, rear (TUBES blue-anodized, 7075-T6 aluminum, stronger than titanium) (73mm) (2)/ rod ends (4)/ aluminum wrench (1) (#2579 3x15 BCS (4) required for installation)**
3644G	**Camber links, rear (TUBES green-anodized 7075-T6 aluminum, stronger than titanium) (73mm) (2)/ rod ends (4)/ aluminum wrench (1) (#2579 3x15 BCS (4) required for installation)**
3644R	**Camber links, rear (TUBES red-anodized, 7075-T6 aluminum, stronger than titanium) (73mm) (2)/ rod ends (4)/ aluminum wrench (1) (#2579 3x15 BCS (4) required for installation)**
5525	Rod ends (12)/ hollow balls (12)
5347	Rod ends, Revo® (large) with hollow balls (12)
3737A	**Turnbuckle, aluminum (blue-anodized), 39mm (1)(assembled w/rod ends)/hollow balls (2) (fits front & rear on Slash)**
3737	**Turnbuckle, aluminum (red-anodized), 39mm (1) (assembled w/rod ends)/hollow balls (2) (fits front & rear on Slash)**
3741A	**Turnbuckles, aluminum (blue-anodized), camber links, front, 39mm (2), rear, 49mm (2) (assembled w/rod ends & hollow balls)/ wrench**
3139A	**Turnbuckles, aluminum (blue-anodized), toe links, 59mm (2) (assembled w/ rod ends & hollow balls) (requires 5mm aluminum wrench #5477)**
3741X	**Turnbuckles, aluminum (red-anodized), camber links, front, 39mm (2), rear, 49mm (2) (assembled w/ rod ends & hollow balls)/wrench**
3139X	**Turnbuckles, aluminum (red-anodized), toe links, 59mm (2) (assembled with rod ends & hollow balls) (requires 5mm aluminum wrench #5477)**
3644	Turnbuckles, camber link, 39mm (69mm center to center) (assembled with rod ends and hollow balls) (1 left, 1 right) (fits front & rear on Slash)
3745	Turnbuckles, toe link, 59mm (78mm center to center) (2) (assembled with rod ends and hollow balls)

If you have questions or need technical assistance, call Traxxas at:

1-888-TRAXXAS

(1-888-872-9927) (U.S. residents only)

For orders, calls outside the U.S., and other information, call 972-549-3000, or fax to 972-549-3011 e-mail Traxxas at support@Traxxas.com

TRAXXAS.COM

OBA
ON-BOARD AUDIO

RACE REPLICA SLASH

MODEL 58034-2

ELECTRIC POWERED 2WD
SHORT COURSE RACE TRUCK



30+ mph

HIGH-CAPACITY 3000 MAH 7-CELL BATTERY AND 4-AMP DC FAST CHARGER

WATERPROOF XL-5 ESC AND TITAN 12T MOTOR

TQ 2.4GHz 3-CHANNEL TRANSMITTER

INTENSE SHORT-COURSE RACING ACTION!

When the racing action cools down, the Traxxas Slash is well-equipped to tackle all of your off-track driving adventures. Equipped with Traxxas On-Board Audio, Slash kicks up the realism of off-road action. The long travel suspension and oil-filled shocks easily absorb jumps and rough terrain. The unique chassis design provides huge center ground clearance to drive over deep ruts, rocks, and other obstacles that leave ordinary R/C trucks stuck. The tires use advanced tread design and sophisticated rubber compounds to provide incredible grip off-road with enough versatility to also perform well on concrete and asphalt. The fenders cover the tires so you bang against your driving buddies without getting tangled up.

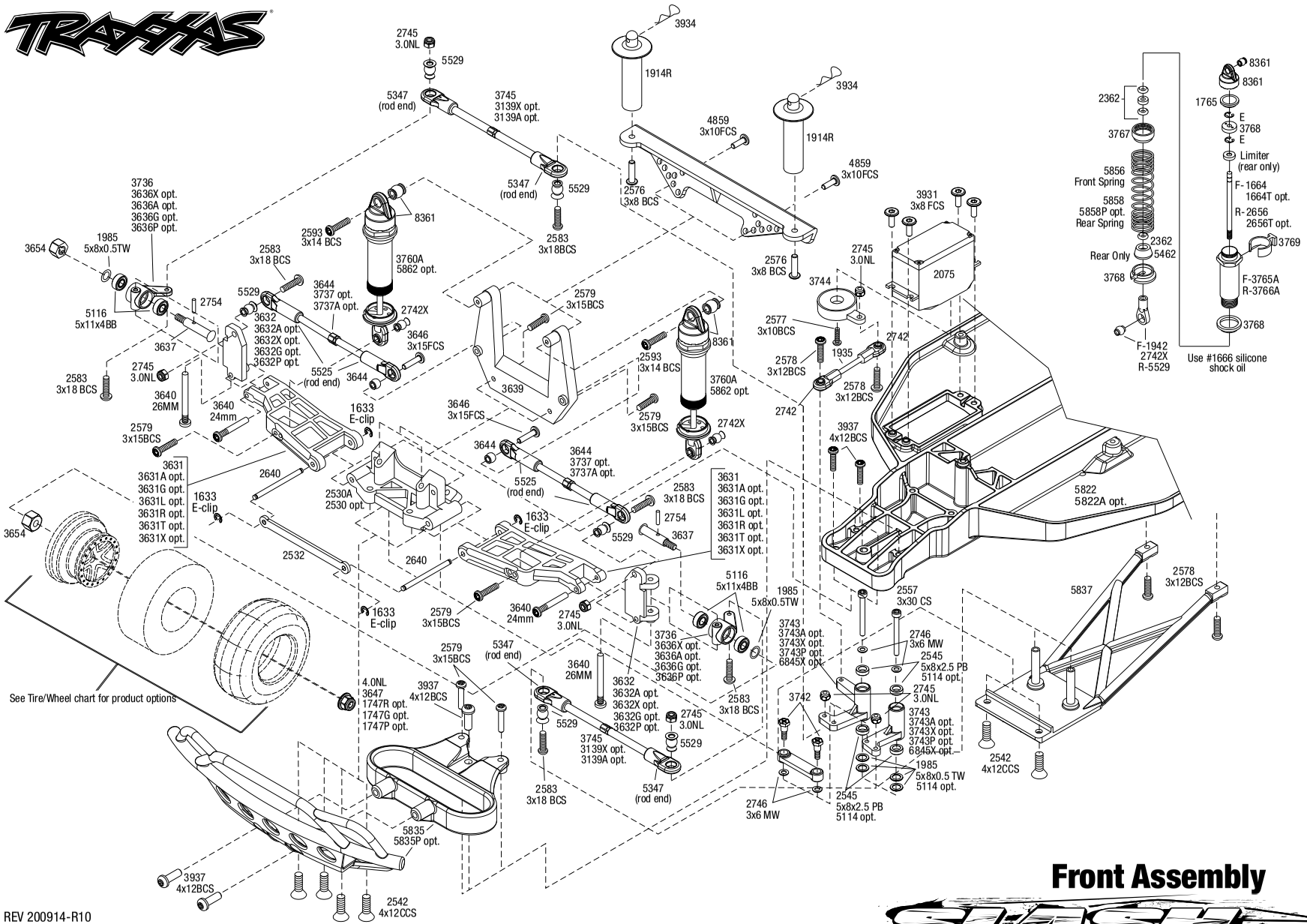

Front Assembly

REV 200914-R10

Specifications on this page are subject to change without notice. Every attempt has been made to ensure the accuracy of this drawing; however, Traxxas cannot be held responsible for typographical or other errors.

See Parts List for a complete listing of optional accessories.

Questions? **Call toll-free, 1-888-TRAXXAS**

SLASH™ OBA (58034-2)

Chassis Assembly

REV 200914-R10

Specifications on this page are subject to change without notice. Every attempt has been made to ensure the accuracy of this drawing; however, Traxxas cannot be held responsible for typographical or other errors.

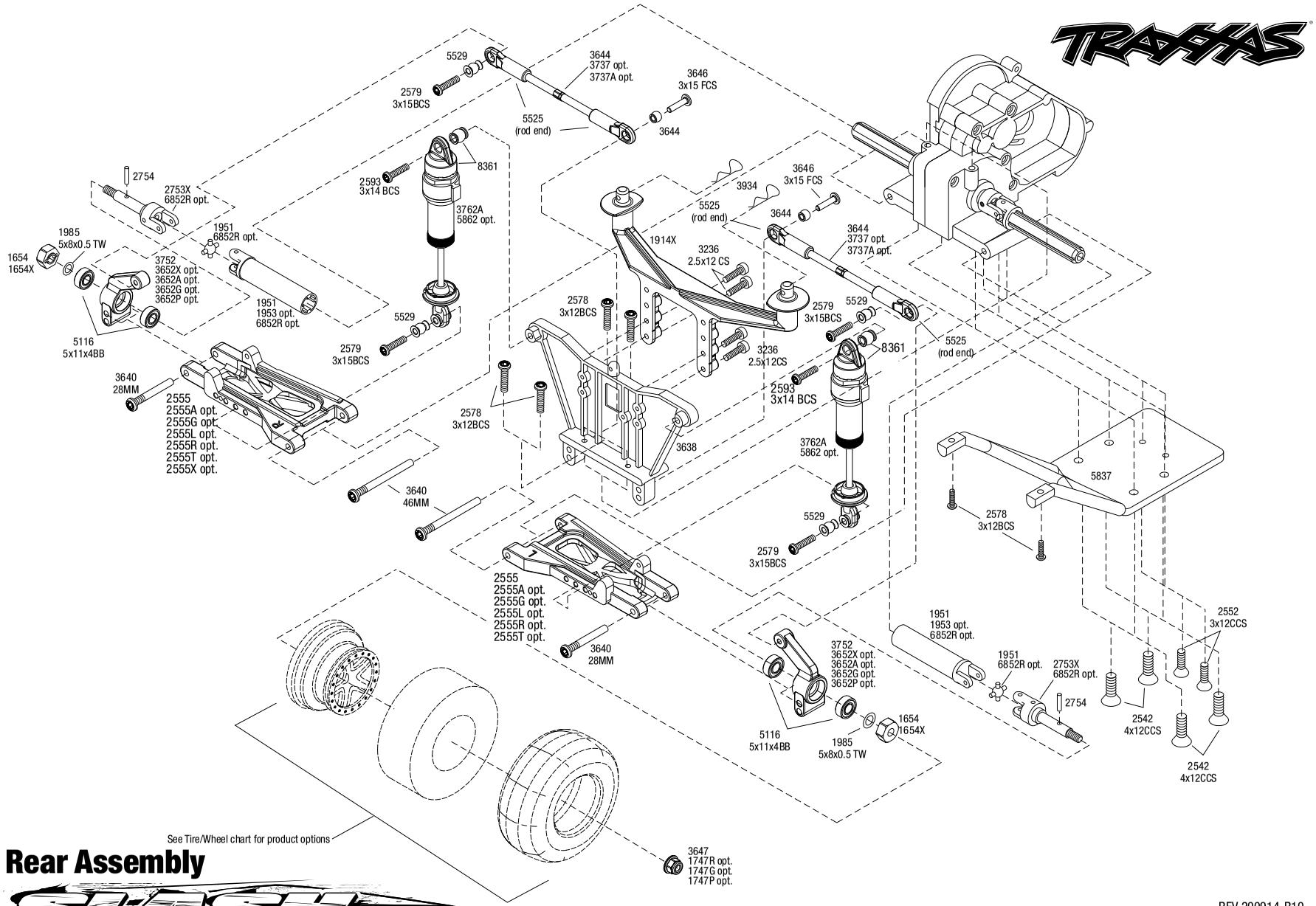

Rear Assembly

SLASH

See Parts List for a complete listing of optional accessories.

REV 200914-R10

Specifications on this page are subject to change without notice. Every attempt has been made to ensure the accuracy of this drawing; however, Traxxas cannot be held responsible for typographical or other errors.

SLASH™ OBA (58034-2)

Transmission Assembly

Specifications on this page are subject to change without notice. Every attempt has been made to ensure the accuracy of this drawing; however, Traxxas cannot be held responsible for typographical or other errors.

REV 200914-R10
See Parts List for a complete listing of optional accessories.

Questions? **Call toll-free, 1-888-TRAXXAS**

Body & On-Board Audio System Assembly

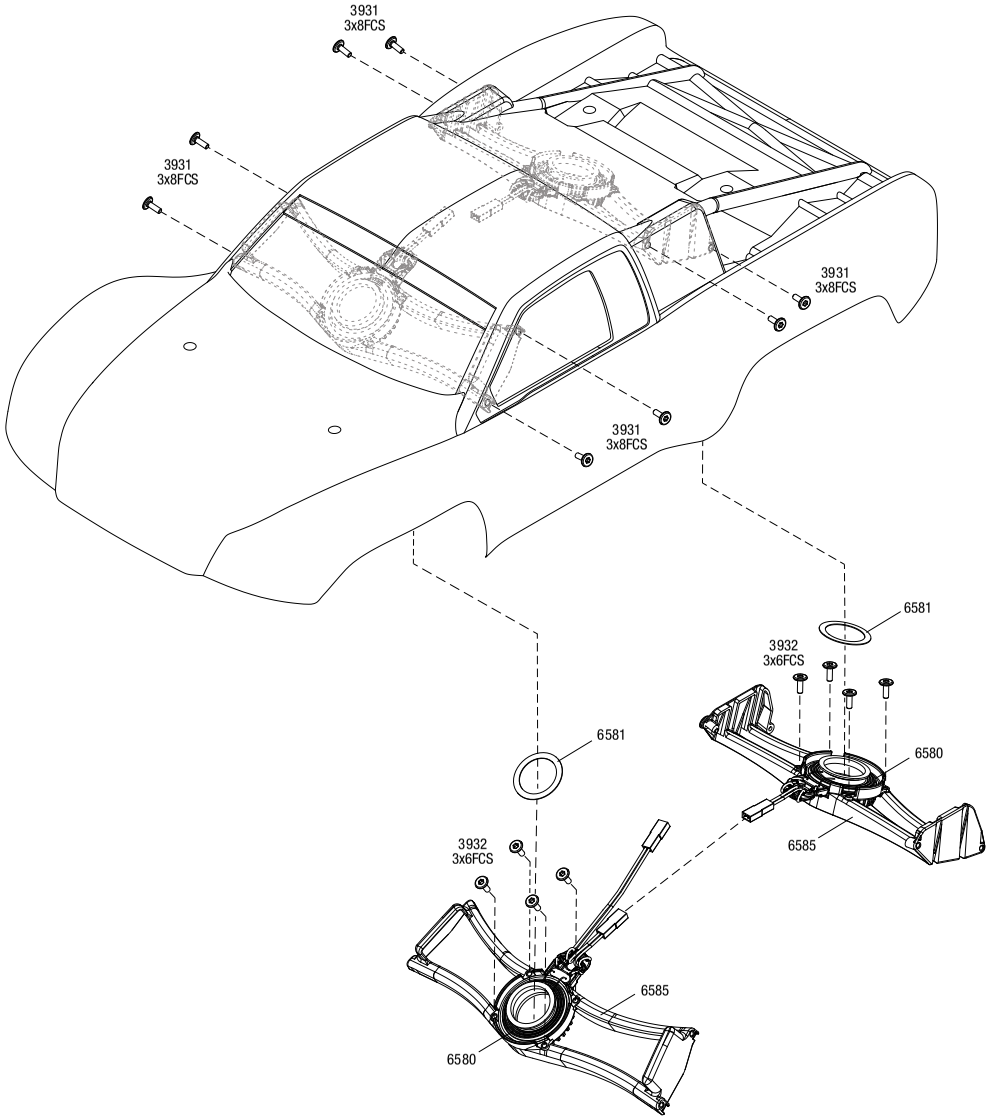

Completed Assembly (view from bottom)

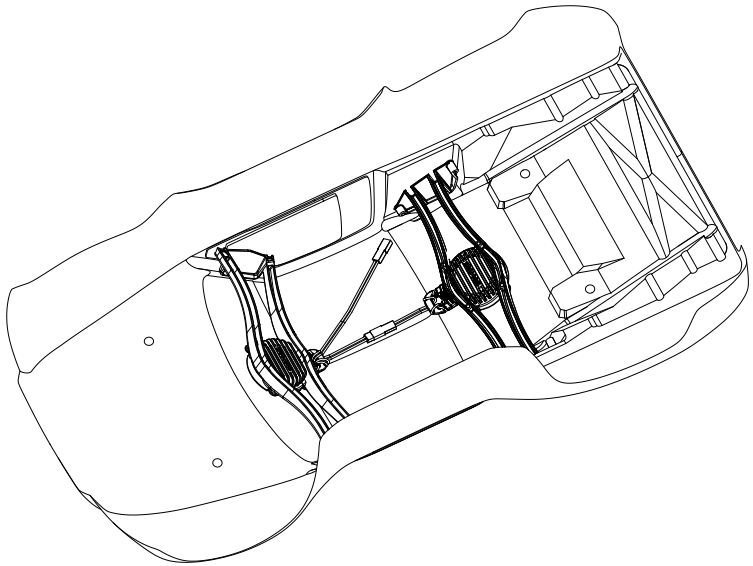

REV 200914-R10
Specifications on this page are subject to change without notice. Every attempt has been made to ensure the accuracy of this drawing; however, Traxxas cannot be held responsible for typographical or other errors.

See Parts List for a complete listing of optional accessories.

Questions? **Call toll-free, 1-888-TRAXXAS**

SLASH™ OBA (58034-2)

PARTS SHOWN IN BOLD ARE OPTIONAL ACCESSORIES.

Part categories and individual part listings are arranged alphabetically.

Bearings & Bushings

4607 **Ball bearings (5x11x4mm) (8)**
2728 **Ball bearings (5x8x2.5mm) (2)**
5116 Ball bearings, blue rubber sealed (5x11x4mm) (2)
5114 **Ball bearings, blue rubber sealed (5x8x2.5mm) (2)**
2545 Bellcrank bushings (plastic) (5x8x2.5mm) (4)
1675 **Bushings, self-lubricating (5x11x4mm) (14)**
1985 PTFE-coated washers, 5x8x0.5mm (20) (use with ball bearings)

Body & Accessories

1926 **Antenna caps, vinyl (2)/ antenna spool**
1726 Antenna, tube (1)/ vinyl antenna cap (1)/ wire retainer (1)
3935 Body clip (mounting clip), angled, 90-degrees (10)
3935A **Body clip (mounting clip), angled, 90-degrees (black) (10)**
3934 Body clips, heavy duty (12)
1914R Body mount, front & rear (black)/ body posts, 52mm (2), 38mm (2), 25mm (2), 6.5mm (2)/ body post extensions (4)/ hardware
1815 Body washers (8)
6716 **Body washers, foam, 2mm (2)/ 3mm (2)/ 4mm (4)**
6811 **Body, Slash 4X4 (clear, requires painting)/ window masks/ decal sheet**
6811R **Body, Slash 4X4, heavy duty (clear, untrimmed, requires painting)/ window masks/ decal sheet**
6811X **Body, Slash 4X4, ProGraphix (Graphics are printed, requires paint & final color application)/ decal sheet**
6849 **Body, Slash 4X4/Slash, Fox Edition (painted, decals applied)**
2514 **Decal sheet, racing sponsors**
5813 **Decal Sheet, Slash**
9950 **Official Team Traxxas® racing decal set (flag logo/ 6-color)**
5846 **Paint masks, body**

Chassis & Attachments

5526 Antenna crimp nut, aluminum (blue-anodized)/ antenna nut tools
5526R **Antenna crimp nut, aluminum (red-anodized)/ antenna nut tools**
1914R Body mount, front & rear (black)/ body posts, 52mm (2), 38mm (2), 25mm (2), 6.5mm (2)/ body post extensions (4)/ hardware
5624 Box, receiver (sealed)/ foam pad/ silicone grease/ 3x8mm BCS (2)/ 2.5x8mm CS (2)/ 3x6mm BCS (2)
5835 Bumper, front/ bumper mount, front (black)
5835P **Bumper, front/ bumper mount, front (pink)**
5836 Bumper, rear/ bumper mount, rear (black)
5836P **Bumper, rear/ bumper mount, rear (pink)**
5830 **Chassis conversion kit, low CG (Slash)**
5832 **Chassis, low CG (black)**
5832A **Chassis, low CG (blue)**
5832G **Chassis, low CG (grey)**
5822 Chassis, Slash
5822A **Chassis, Slash (black)**
5827 Hold down, battery/ hold down retainer/ battery post/ foam spacer/ angled body clip
5827X **Hold down, battery/ hold down retainer/ battery post/ foam spacer/ angled body clip (allows for installation of taller, multi-cell batteries)**
5831 **Lower chassis, low CG (black)**
5831A **Lower chassis, low CG (blue)**
5831G **Lower chassis, low CG (grey)**
5823 Nerf bars, chassis (black)
5833 **Nerf bars, low CG (black)**
5833A **Nerf bars, low CG (blue)**
5833G **Nerf bars, low CG (grey)**
5625 Seal kit, receiver box (includes o-ring, seals, and silicone grease)
5837 Skidplates, front & rear (black)
5185 **Tires, rubber (2) (fits Traxxas® wheelie bar wheels)**
4974 **Wheelie bar arm (1)/ connector (1)/ 3x12 SS (hex drive) (4)**
3677A **Wheelie bar mount (1) / hardware (green)**
3677P **Wheelie bar mount (1) / hardware (pink)**
3677 Wheelie bar mount (1)/ hardware (black)
3677X **Wheelie bar mount (1)/ hardware (blue)**
3678 **Wheelie bar, assembled (black) (fits Slash, Bandit, Rustler®, Stampede® series)**
3678X **Wheelie bar, assembled (blue) (fits Slash, Bandit, Rustler®, Stampede® series)**
3678A **Wheelie bar, assembled (green) (fits Slash, Bandit, Rustler®, Stampede® series)**
3678P **Wheelie bar, assembled (pink) (fits Slash, Bandit, Rustler®, Stampede® series)**
4976 **Wheels (4)/ axles (2) (for T-Maxx®/E-Maxx wheelie bar)**
5186A **Wheels, aluminum (blue-anodized) (2)/ 5x8mm ball bearings (4)/ axles (2)/ rubber tires (2)**
5186 **Wheels, aluminum (red-anodized) (2)/ 5x8mm ball bearings (4)/ axles (2)/ rubber tires (2)**

Differential Components

2381X Main diff with steel ring gear/ side cover plate/ screws (Bandit, Stampede®, Rustler®)
2382 Planet gears (4)/ planet shafts (4)/ sun gears (2)/sun gear alignment shaft (1) all hardened steel
2388X Planetary gear differential with steel ring gear (complete) (fits Bandit, Stampede®, Rustler®)
5169 Screws, 2.6x8mm countersunk machine (6)
1647 Silicone grease

Driveline Components

5116 Ball bearings, blue rubber sealed (5x11x4mm) (2)
9059X **Cross pin (2)/ drive pin (2) (repairs 2 axle shafts)**
9057X **Differential output shafts, steel-splined constant-velocity (2)**
4628R Differential output yokes, black (2)/ 3x5mm countersunk screws (2)/ screw pin (2)
4628X **Differential output yokes, hardened steel (w/ U-joints) (2)**
6828X **Differential output yokes, heavy duty (2)/ screw pin (2)**
6852X **Driveshaft assembly, rear, heavy duty (1) (left or right) (fully assembled, ready to install)/ screw pin (1)**
6852R **Driveshafts, rear, steel-spline constant-velocity (complete assembly) (2)**
9052X **Driveshafts, rear, steel-spline constant-velocity (complete assembly) (2)**
1953 **Half shaft pro-pack (internal-splined (6)/ external-splined (6) (plastic shafts only)**
9055X **Half shaft, external splined (steel-spline constant velocity) (1)**
6750 **Half shaft, external splined (steel-spline constant-velocity) (1)**
9056X **Half shaft, internal splined (steel-spline constant velocity) (1)**
6751 **Half shaft, internal splined (steel-spline constant-velocity) (1)**
6850X **Half shafts, heavy duty (external splined (2)/ internal splined (2))/ metal u-joints (4)**
1951 Half shafts, long truck (external-splined (2) & internal-splined (2)/ metal U-joints (4)
6757 **Rebuild kit, steel-splined constant-velocity driveshafts (includes pins, dustboots, lube, and hardware)**
9058X **Rebuild kit, steel-splined constant-velocity driveshafts (includes pins, lube, and hardware for two axle shafts)**
3752 Stub axle carriers (2) (requires 5x11x4mm bearings)
3652A **Stub axle carriers, Rustler®/Stampede®/Bandit (2), 6061-T6 aluminum (blue-anodized)/ 5x11mm ball bearings (4)**
3652G **Stub axle carriers, Rustler®/Stampede®/Bandit (2), 6061-T6 aluminum (green-anodized)/ 5x11mm ball bearings (4)**
3652P **Stub axle carriers, Rustler®/Stampede®/Bandit (2), 6061-T6 aluminum (pink-anodized)/ 5x11mm ball bearings (4)**
3652P **Stub axle carriers, Rustler®/Stampede®/Bandit (2), 6061-T6 aluminum (pink-anodized)/ 5x11mm ball bearings (4)**
3652X **Stub axle carriers, Rustler®/Stampede®/Bandit (2), 6061-T6 aluminum (red-anodized)/ 5x11mm ball bearings (4)**
2754 Stub axle pins (4)
6753 **Stub axle, rear, 5mm (steel-splined constant-velocity driveshaft) (1)**
9053X **Stub axle, rear, steel-splined constant velocity (1)**
2753X Stub axles, rear (2)
6853X **Stub axles, rear, heavy duty (2)/pins (2)**

Front Suspension & Steering

3637 Axles (front) (2)
2728 **Ball bearings (5x8x2.5mm) (2)**
5116 Ball bearings, blue rubber sealed (5x11x4mm) (2)
2545 Bellcrank bushings (plastic) (5x8x2.5mm) (4)
2530 **Bulkhead (front) (black)**
2530A Bulkhead (front) (grey)
3643X **Camber links, front (TUBES blue-anodized, 7075-T6 aluminum, stronger than titanium) (83mm) (2)/ rod ends (4)/ aluminum wrench (1) (#2579 3x15 BCS (4) required for installation)**
3643G **Camber links, front (TUBES green-anodized, 7075-T6 aluminum, stronger than titanium) (83mm) (2)/ rod ends (4)/ aluminum wrench (1) (#2579 3x15 BCS (4) required for installation)**
3643R **Camber links, front (TUBES red-anodized, 7075-T6 aluminum, stronger than titanium) (83mm) (2)/ rod ends (4)/ aluminum wrench (1) (#2579 3x15 BCS (4) required for installation)**
3632 Caster blocks (l&r) (30-degree)

3632A	**Caster blocks, 30-degree, blue-anodized 6061-T6 aluminum (left & right)/ suspension screw pin (2)**
3632G	**Caster blocks, 30-degree, green-anodized 6061-T6 aluminum (left & right)/ suspension screw pin (2)**
3632P	**Caster blocks, 30-degree, pink-anodized 6061-T6 aluminum (left & right)/ suspension screw pin (2)**
3632X	**Caster blocks, 30-degree, red-anodized 6061-T6 aluminum (left & right)/ suspension screw pin (2)**
5347	Rod ends, Revo® (large) with hollow balls (12)
3646	Screws, 3x15mm flat-head machine (hex drive) (6)
3744	Servo saver w/adapters
3639	Shock tower (front)
3743	Steering bellcranks (l&r)/ draglink
3743A	**Steering bellcranks, drag link (blue-anodized 6061-T6 aluminum)/ 5x8mm ball bearings (4)/ hardware (assembled)**
3743G	**Steering bellcranks, drag link (green-anodized 6061-T6 aluminum)/ 5x8mm ball bearings (4)/ hardware (assembled)**
3743P	**Steering bellcranks, drag link (pink-anodized 6061-T6 aluminum)/ 5x8mm ball bearings (4)/ hardware (assembled)**
3743X	**Steering bellcranks, drag link (red-anodized 6061-T6 aluminum)/ 5x8mm ball bearings (4)/ hardware (assembled)**
6845X	**Steering bellcranks/ servo saver/ servo saver spring/ servo spring retainer/servo horn, steering**
3736	Steering blocks, left & right (2) (requires 5x11x4mm bearings)
3636A	**Steering blocks, Rustler®/Stampede®/Bandit (2), 6061-T6 aluminum (blue-anodized)/ 5x11mm ball bearings (4)**
3636G	**Steering blocks, Rustler®/Stampede®/Bandit (2), 6061-T6 aluminum (green-anodized)/ 5x11mm ball bearings (4)**
3636P	**Steering blocks, Rustler®/Stampede®/Bandit (2), 6061-T6 aluminum (pink-anodized)/ 5x11mm ball bearings (4)**
3636X	**Steering blocks, Rustler®/Stampede®/Bandit (2), 6061-T6 aluminum (red-anodized)/ 5x11mm ball bearings (4)**
3631	Suspension arms (front) (2)
3631X	**Suspension arms, black, front, heavy duty (2)**
3631A	**Suspension arms, blue, front, heavy duty (2)**
3631G	**Suspension arms, green, front, heavy duty (2)**
3631T	**Suspension arms, orange, front, heavy duty (2)**
3631R	**Suspension arms, red, front, heavy duty (2)**
3631L	**Suspension arms, white, front, heavy duty (2)**
2640	Suspension pins, 44mm (2) w/ e-clips
3640	Suspension screw pin set, steel (hex drive) (requires part #2640 for a complete suspension pin set) (Bandit, Rustler®, Stampede®)
2532	Tie bar, fiberglass
1935	Turnbuckles, 36mm (2)
3139A	**Turnbuckles, aluminum (blue-anodized), toe links, 59mm (2) (assembled w/ rod ends & hollow balls) (requires 5mm aluminum wrench #5477)**
3139X	**Turnbuckles, aluminum (red-anodized), toe links, 59mm (2) (assembled with rod ends & hollow balls) (requires 5mm aluminum wrench #5477)**
3644	Turnbuckles, camber link, 39mm (69mm center to center) (assembled with rod ends and hollow balls) (1 left, 1 right) (fits front & rear on Slash)
3745	Turnbuckles, toe link, 59mm (78mm center to center) (2) (assembled with rod ends and hollow balls)

Hardware

1926	**Antenna caps, vinyl (2)/ antenna spool**
1726	Antenna, tube (1)/ vinyl antenna cap (1)/ wire retainer (1)
3935	Body clip (mounting clip), angled, 90-degrees (10)
3935A	**Body clip (mounting clip), angled, 90-degrees (black) (10)**
3934	Body clips, heavy duty (12)
1589	Double-sided adhesive tape (25mm x 25mm) (2)
1633	E-clips/ C-rings
2586	Screws, 3x15mm cap-head machine (hex drive) (6)
2745	Nuts, 3mm nylon locking (12)
3647	Nuts, 4mm flanged nylon locking (steel, serrated) (8)
1747	Nuts, 4mm nylon locking (10)
1747R	**Nuts, aluminum, flanged, serrated (4mm) (blue-anodized) (4)**
1747G	**Nuts, aluminum, flanged, serrated (4mm) (green-anodized) (4)**
1747P	**Nuts, aluminum, flanged, serrated (4mm) (pink-anodized) (4)**
1747P	**Nuts, aluminum, flanged, serrated (4mm) (pink-anodized) (4)**
1747A	**Nuts, aluminum, flanged, serrated (4mm) (red-anodized) (4)**
1985	PTFE-coated washers, 5x8x0.5mm (20) (use with ball bearings)
5525	Rod ends (12)/ hollow balls (12)
5347	Rod ends, Revo® (large) with hollow balls (12)
2742X	Rod ends, short (6)/ hollow balls (6)
3215	Screws, 2.5x6mm cap-head machine (hex drive) (6)
3965	Screws, 2.5x8mm cap-head machine (6)
2577	Screws, 3x10mm button-head machine (hex drive) (6)
4859	Screws, 3x10mm flat-head machine (hex drive) (4)
2578	Screws, 3x12mm button-head machine (hex drive) (6)
2552	Screws, 3x12mm countersunk machine (6) (hex drive)
2579	Screws, 3x15mm button-head machine (hex drive) (6)
3646	Screws, 3x15mm flat-head machine (hex drive) (6)
2583	Screws, 3x18mm button-head machine (hex drive) (6)
2580	Screws, 3x20mm button-head machine (hex drive) (6)
2591	Screws, 3x23mm button-head machine (hex drive) (6)
2582	Screws, 3x30mm button-head machine (hex drive) (6)
2592	Screws, 3x40mm button-head machine (hex drive) (6)
2575	Screws, 3x6mm button-head machine (hex drive) (6)
3932	Screws, 3x6mm flat-head machine (hex drive) (6)
2576	Screws, 3x8mm button-head machine (hex drive) (6)
3931	Screws, 3x8mm flat-head machine (hex drive) (6)
3937	Screws, 4x12mm button-head machine (hex drive) (6)
2542	Screws, 4x12mm countersunk machine (hex drive) (6)
2546	Screws, 4x15mm countersunk machine (hex drive) (6)
2743	Set (grub) screws, 3mm hardened (12)
5529	Shim set, 3x7x1mm (2), 3x6x0.5mm (4), 3x7x2mm (2)/ hollow balls, captured (4)
3742	Shoulder screws, steering bellcranks (3x30mm cap-head machine) (2)/ draglink shoulder screws (chrome) (2)
3642X	**Shoulder screws, Ultra Shocks (3x12 hex drive) (6)**
2754	Stub axle pins (4)
2746	**Washers, 3x6mm metal (12)**

Motors & Electronics

1726	Antenna, tube (1)/ vinyl antenna cap (1)/ wire retainer (1)
2260	**BEC assembly (complete)**
3790	Gear adapter, fixed
2072A	Gear set (for 2070, 2075 servos)
2252	**Gear set, metal (for 2250, 2255 servos)**
3785	Motor, Titan® 12T (12-Turn, 550 size)
3351R	**Motor, Velineon® 3500, brushless (assembled with 12-gauge wire and gold-plated bullet connectors)**
3931	Screws, 3x8mm flat-head machine (hex drive) (6)
2254	**Servo case, aluminum (blue-anodized) (middle) (for 2250 servo)**
2253	**Servo case, aluminum (red-anodized) (middle) (for 2255 servo)**
2251	**Servo case, plastic (top, middle, bottom)/ gaskets/ hardware (for 2250, 2255 servos)**
2074	Servo case/gaskets (for 2056 and 2075 waterproof servos)
2075R	**Servo, digital high-speed, metal gear (ball bearing), waterproof**
2075	Servo, digital high-torque (ball bearing), waterproof
2250	**Servo, digital high-torque 330 coreless, metal gear (ball bearing), waterproof**
2255	**Servo, digital high-torque 400 brushless, metal gear (ball bearing), waterproof**
2075X	**Servo, digital high-torque, metal gear (ball bearing), waterproof**
3350R	**Velineon® VXL-3s Brushless Power System, waterproof (includes VXL-3s waterproof ESC, Velineon 3500 motor, and speed control mounting plate (part #3725R))**
3355R	**Velineon® VXL-3s Electronic Speed Control, waterproof (brushless) (fwd/rev/brake)**
3018R	XL-5 Electronic Speed Control, waterproof (land version, low-voltage detection, fwd/rev/brake)

On-Board Audio System

6581	Double-sided adhesive, sound output module (4)
6585	Mounts, sound output module, Slash (front & rear)
6580	Sound output module, on-board audio system

Radio System, Batteries & Chargers

2842X	**5000mAh 7.4v 2-Cell 25C LiPo Battery**
2843X	**5800mAh 7.4v 2-Cell 25C LiPo Battery**
2869X	**7600mAh 7.4v 2-Cell 25C LiPo Battery**
2976	**AC to DC converter, 40W**
2938X	**Adapter, Traxxas® iD® LiPo battery (adapts Traxxas iD batteries to separate balance ports)**
5526	Antenna crimp nut, aluminum (blue-anodized)/ antenna nut tools
5526R	**Antenna crimp nut, aluminum (red-anodized)/ antenna nut tools**
2943	**Battery charge indicators (green (4), blue (4), grey (4))**
6548	Battery door, transmitter (replacement for #6516, 6517, 6528, 6529, 6530 transmitters)
2914	**Battery, Power Cell AA Alkaline (4)**
2923X	Battery, Power Cell, 3000mAh (NiMH, 7-C flat, 8.4V)
2926X	**Battery, Power Cell, 3000mAh (NiMH, 7-C hump, 8.4V)**
2940X	**Battery, Series 3 Power Cell, 3300mAh (NiMH, 7-C flat, 8.4V)**
2941X	**Battery, Series 3 Power Cell, 3300mAh (NiMH, 7-C hump, 8.4V)**
2950X	**Battery, Series 4 Power Cell, 4200mAh (NiMH, 7-C flat, 8.4V)**
2951X	**Battery, Series 4 Power Cell, 4200mAh (NiMH, 7-C hump, 8.4V)**
2960X	**Battery, Series 5 Power Cell, 5000mAh (NiMH, 7-C flat, 8.4V)**
2961X	**Battery, Series 5 Power Cell, 5000mAh (NiMH, 7-C hump, 8.4V)**
2983	**Battery/charger completer pack (includes #2969 2-amp NiMH peak detecting AC charger (1), #2923X 3000mAh 8.4V 7-cell NiMH battery (1))**

BFGoodrich® Tires Trademarks are used under license from Michelin Group Companies.

SLASH™ OBA (58034-2)

2992 **Battery/charger completer pack (includes #2970 iD® charger (1), #2843X 5800mAh 7.4V 2-cell 25C LiPo battery (1))**
2260 **BEC assembly (complete)**
2975 Charger, DC, 4 amp (6 - 7 cell, 7.2 - 8.4 volt, NiMH)
2972 **Charger, EZ-Peak® Dual, 100W, NiMH/LiPo with iD® Auto Battery Identification**
2973 **Charger, EZ-Peak® Live Dual, 200W, NiMH/LiPo with iD® Auto Battery Identification**
2971 **Charger, EZ-Peak® Live, 100W, NiMH/LiPo with iD® Auto Battery Identification**
2970 **Charger, EZ-Peak® Plus, 4 amp, NiMH/LiPo with iD® Auto Battery Identification**
6525 **Communication link, telemetry expander**
6541 **Connector, power tap (with cable) (long)/ wire tie**
2978 **Fuse, charger, 5A (2) (for #2974, 2975, 2977)**
2072A Gear set (for 2070, 2075 servos)
2252 **Gear set, metal (for 2250, 2255 servos)**
2968X **LiPo cell voltage checker/balancer (includes #2938X adapter for Traxxas® iD® batteries)**
2968 **LiPo cell voltage checker/balancer (requires #2938X adapter for Traxxas® iD® batteries)**
6554 **Mount, telemetry expander (fits Bandit, Rustler®, Slash 2WD)**
6535 **Mount, temperature sensor (electric motors)/ wire tie/ thermal pad**
6519 Receiver, micro, TQ 2.4GHz (3-channel)
6518 **Receiver, micro, TQi 2.4GHz with telemetry (5-channel)**
6552 **Seal kit, expander box (includes o-ring, seals, and silicone grease)**
6526 **Sensor, auto-detectable, temperature**
6527 **Sensor, auto-detectable, voltage**
6520 **Sensor, RPM (long)/ 3x4mm BCS (2)/ 3x4 GS (1)**
6521 **Sensor, temperature and voltage (long)**
2254 **Servo case, aluminum (blue-anodized) (middle) (for 2250 servo)**
2253 **Servo case, aluminum (red-anodized) (middle) (for 2255 servo)**
2251 **Servo case, plastic (top, middle, bottom)/ gaskets/ hardware (for 2250, 2255 servos)**
2074 Servo case/gaskets (for 2056 and 2075 waterproof servos)
2075R **Servo, digital high-speed, metal gear (ball bearing), waterproof**
2075 Servo, digital high-torque (ball bearing), waterproof
2250 **Servo, digital high-torque 330 coreless, metal gear (ball bearing), waterproof**
2255 **Servo, digital high-torque 400 brushless, metal gear (ball bearing), waterproof**
2075X **Servo, digital high-torque, metal gear (ball bearing), waterproof**
6553X **Telemetry expander 2.0 and GPS module 2.0, TQi radio system**
6550X **Telemetry expander 2.0, TQi radio system (for use only with #6551X GPS module)**
6551X **Telemetry GPS module 2.0, TQi radio system (for use only with #6550X telemetry expander)**
6538 **Telemetry trigger magnet holders, spur gear/ magnet, 5x2mm (1)/ 3x8mm CCS (3)/ 3x10mm CCS (3)**
6540 **Telemetry trigger magnet, 5X2mm (1)**
6507R **TQi 2.4 GHz High Output radio system, 4-channel with Traxxas Link™ Wireless Module, TSM (4-ch transmitter, 5-ch micro receiver)**
6517 Transmitter, TQ 2.4GHz, 3-channel (transmitter only)
6529 **Transmitter, TQi Traxxas Link™ enabled, 2.4GHz high output, 3-channel (transmitter only)**
6530 **Transmitter, TQi Traxxas Link™ enabled, 2.4GHz high output, 4-channel (transmitter only)**
6511 **Traxxas Link™ Wireless Module**
3355R **Velineon® VXL-3s Electronic Speed Control, waterproof (brushless) (fwd/rev/brake)**
6537 **Wire retainers, gear cover/ 3x4mm BCS (2)**
3018R XL-5 Electronic Speed Control, waterproof (land version, low-voltage detection, fwd/rev/brake)

Ready-To-Race Model

58034-2 Slash: 1/10-Scale 2WD Short Course Racing Truck with TQ 2.4GHz Radio System and On-Board Audio

Rear Suspension

5116 Ball bearings, blue rubber sealed (5x11x4mm) (2)
3644X **Camber links, rear (TUBES blue-anodized, 7075-T6 aluminum, stronger than titanium) (73mm) (2)/ rod ends (4)/ aluminum wrench (1) (#2579 3x15 BCS (4) required for installation)**
3644G **Camber links, rear (TUBES green-anodized 7075-T6 aluminum, stronger than titanium) (73mm) (2)/ rod ends (4)/ aluminum wrench (1) (#2579 3x15 BCS (4) required for installation)**
3644R **Camber links, rear (TUBES red-anodized, 7075-T6 aluminum, stronger than titanium) (73mm) (2)/ rod ends (4)/ aluminum wrench (1) (#2579 3x15 BCS (4) required for installation)**
1951 Half shafts, long truck (external-splined (2) & internal-splined (2)/ metal U-joints (4)
3638 Shock tower (rear)
3752 Stub axle carriers (2) (requires 5x11x4mm bearings)
3652A **Stub axle carriers, Rustler®/Stampede®/Bandit (2), 6061-T6 aluminum (blue-anodized)/ 5x11mm ball bearings (4)**
3652G **Stub axle carriers, Rustler®/Stampede®/Bandit (2), 6061-T6 aluminum (green-anodized)/ 5x11mm ball bearings (4)**
3652P **Stub axle carriers, Rustler®/Stampede®/Bandit (2), 6061-T6 aluminum (pink-anodized)/ 5x11mm ball bearings (4)**
3652P **Stub axle carriers, Rustler®/Stampede®/Bandit (2), 6061-T6 aluminum (pink-anodized)/ 5x11mm ball bearings (4)**
3652X **Stub axle carriers, Rustler®/Stampede®/Bandit (2), 6061-T6 aluminum (red-anodized)/ 5x11mm ball bearings (4)**
2753X Stub axles, rear (2)
2555 Suspension arms, (rear) (2)
2555X **Suspension arms, black, rear, heavy duty (2)**
2555A **Suspension arms, blue, rear, heavy duty (2)**
2555G **Suspension arms, green, rear, heavy duty (2)**
2555T **Suspension arms, orange, rear, heavy duty (2)**
2555R **Suspension arms, red, rear, heavy duty (2)**
2555L **Suspension arms, white, rear, heavy duty (2)**
3640 Suspension screw pin set, steel (hex drive) (requires part #2640 for a complete suspension pin set) (Bandit, Rustler®, Stampede®)
3644 Turnbuckles, camber link, 39mm (69mm center to center) (assembled with rod ends and hollow balls) (1 left, 1 right) (fits front & rear on Slash)

Shocks (Pro-level Aluminum)

2664 **Big Bore shock cylinder (long) (1)**
2666 **Big Bore shock cylinder (XX-long) (1)**
5862 **Big Bore shocks (hard-anodized & PTFE-coated T6 aluminum) (assembled with TiN shafts and springs) (front & rear) (4)**
2660 **Big Bore shocks (long) (hard-anodized & PTFE-coated T6 aluminum) (assembled with TiN shafts) w/o springs (front) (2)**
2662 **Big Bore shocks (XX-long) (hard-anodized & PTFE-coated T6 aluminum) (assembled with TiN shafts) w/o springs (rear) (2)**
2669 **Piston head set (2-hole (2)/ 3-hole (2))/ shock mounting bushings & washers (2) (Big Bore Shocks)**
2362 **Rebuild kit, Ultra shocks (for 2 shocks)**
1942 Rod ends (16 long & 4 short)/ hollow ball connectors (18)/ ball screws (2)
2742X Rod ends, short (6)/ hollow balls (6)
2667 **Shock caps, aluminum (Big Bore Shocks) (2)**
1664T **Shock shafts, hardened steel, titanium nitride coated (long) (2)**
2656T **Shock shafts, hardened steel, titanium nitride coated (xx-long) (2)**
1664 Shock shafts, steel, chrome finish (long) (2)
2656 Shock shafts, steel, chrome finish (xx-long) (2)
1765 Silicone diaphragms (4)
1666 Silicone shock oil (30 wt)
2668 **Spring retainers, upper & lower (2)/ spring pre-load spacers: 1mm (4)/ 1.5mm (2)/ 2mm (2)/ 4mm (2)/ 8mm (2) (Big Bore Shocks)**
5860 **Springs, front (white) (progressive rate) (2) (fits #5862 aluminum Big Bore shocks)**
5859 **Springs, rear (white) (progressive rate) (2) (fits #5862 aluminum Big Bore shocks)**

Shocks (Ultra Shocks)

3765A Body, Ultra Shock(s) (long) (grey) (2)
3766A Body, Ultra Shock(s) (XXL) (grey) (2)
2362 **Rebuild kit, Ultra shocks (for 2 shocks)**
1942 Rod ends (16 long & 4 short)/ hollow ball connectors (18)/ ball screws (2)
2742X Rod ends, short (6)/ hollow balls (6)
3767 **Shock caps (2)/ shock bottoms (2)**
8361 Shock caps (black) (4) (assembled with hollow balls)
3767A **Shock caps, aluminum (blue-anodized) (4) (fits all Ultra Shocks)**
3767G **Shock caps, aluminum (green-anodized) (4) (fits all Ultra Shocks)**
3767P **Shock caps, aluminum (pink-anodized) (4) (fits all Ultra Shocks)**
3767X **Shock caps, aluminum (red-anodized) (4) (fits all Ultra Shocks)**
1664T **Shock shafts, hardened steel, titanium nitride coated (long) (2)**
2656T **Shock shafts, hardened steel, titanium nitride coated (xx-long) (2)**
1664 **Shock shafts, steel, chrome finish (long) (2)**
2656 Shock shafts, steel, chrome finish (xx-long) (2)
3642X **Shoulder screws, Ultra Shocks (3x12 hex drive) (6)**
1765 Silicone diaphragms (4)
1666 Silicone shock oil (30 wt)
3769 Spring pre-load spacers: 1mm (4)/ 2mm (2)/ 4mm (2)/ 8mm (2)
3768 Spring retainers, upper & lower (2)/ piston head set (2-hole (2)/ 3-hole (2))
2458 **Springs, front (black) (2)**
2458P **Springs, front (pink) (2)**

BFGoodrich® Tires Trademarks are used under license from Michelin Group Companies.

Questions? Call toll-free, 1-888-TRAXXAS

5857P **Springs, front (pink) (progressive rate) (2)**
2458A **Springs, front (white) (2)**
5857 **Springs, front (white) (progressive rate) (2)**
5856 Springs, front (white) (progressive, +20% rate, yellow stripe) (2)
3757 **Springs, rear (black) (2)**
3757T **Springs, rear (blue) (2)**
3757A **Springs, rear (green) (2)**
3757P **Springs, rear (pink) (2)**
5858P **Springs, rear (pink) (progressive rate) (2)**
3757X **Springs, rear (white) (2)**
5858 Springs, rear (white) (progressive rate) (2)
4957 **Springs, red (for Ultra Shocks only) (2.5 rate) (f/r) (2)**
3760 **Ultra Shocks (black) (long) (complete w/ spring pre-load spacers & springs) (front) (2)**
3762 **Ultra Shocks (black) (xx-long) (complete w/ spring pre-load spacers & springs) (rear) (2)**
3760A Ultra Shocks (grey) (long) (complete w/ spring pre-load spacers & springs) (2)
3762A Ultra Shocks (grey) (xx-long) (complete w/ spring pre-load spacers & springs) (rear) (2)

Slipper Clutch Components

3793 Input shaft (slipper shaft) / spring pin
5552X Rebuild kit, slipper clutch (steel disc/ friction pads (3)/ spring (2)/ pin/ 4.0mm NL (1)/ 5.0mm NL (1))
2554 Screws, 3x6mm cap-head machine (hex drive) (6)
5556 Slipper pressure plate & hub (aluminum alloy)

Spur Gears & Pinion Gears

3790 Gear adapter, fixed
2416 Gear, 16-T pinion (48-pitch) / set screw
1918 **Gear, 18-T pinion (48-pitch) / set screw**
2419 **Gear, 19-T pinion (48-pitch) / set screw**
2423 **Gear, 23-T pinion (48-pitch) / set screw**
2426 **Gear, 26-T pinion (48-pitch)/set screw**
2431 **Gear, 31-T pinion (48-pitch) / set screw**
4725 **Gear, pinion (25-tooth) (48-pitch) / set screw**
4728 **Gear, pinion (28-tooth) (48-pitch)/ set screw**
4683 **Spur gear, 83-tooth (48-pitch) (for models with Torque-Control slipper clutch)**
4686 **Spur gear, 86-tooth (48-pitch) (for models with Torque-Control slipper clutch)**
4690 Spur gear, 90-tooth (48-pitch) (for models with Torque-Control slipper clutch)

Steering Components

2728 **Ball bearings (5x8x2.5mm) (2)**
2545 Bellcrank bushings (plastic) (5x8x2.5mm) (4)
3643X **Camber links, front (TUBES blue-anodized, 7075-T6 aluminum, stronger than titanium) (83mm) (2)/ rod ends (4)/ aluminum wrench (1) (#2579 3x15 BCS (4) required for installation)**
3643G **Camber links, front (TUBES green-anodized, 7075-T6 aluminum, stronger than titanium) (83mm) (2)/ rod ends (4)/ aluminum wrench (1) (#2579 3x15 BCS (4) required for installation)**
3643R **Camber links, front (TUBES red-anodized, 7075-T6 aluminum, stronger than titanium) (83mm) (2)/ rod ends (4)/ aluminum wrench (1) (#2579 3x15 BCS (4) required for installation)**
1985 PTFE-coated washers, 5x8x0.5mm (20) (use with ball bearings)
2742 Rod ends, long (6)/ hollow ball connectors (6)
5347 Rod ends, Revo® (large) with hollow balls (12)
3744 Servo saver w/adapters
3742 Shoulder screws, steering bellcranks (3x30mm cap-head machine) (2)/ draglink shoulder screws (chrome) (2)
3743 Steering bellcranks (l&r)/ draglink
3743A **Steering bellcranks, drag link (blue-anodized 6061-T6 aluminum)/ 5x8mm ball bearings (4)/ hardware (assembled)**
3743G **Steering bellcranks, drag link (green-anodized 6061-T6 aluminum)/ 5x8mm ball bearings (4)/ hardware (assembled)**
3743P **Steering bellcranks, drag link (pink-anodized 6061-T6 aluminum)/ 5x8mm ball bearings (4)/ hardware (assembled)**
3743X **Steering bellcranks, drag link (red-anodized 6061-T6 aluminum)/ 5x8mm ball bearings (4)/ hardware (assembled)**
6845X **Steering bellcranks/ servo saver/ servo saver spring/ servo spring retainer/servo horn, steering**
1935 Turnbuckles, 36mm (2)
3139A **Turnbuckles, aluminum (blue-anodized), toe links, 59mm (2) (assembled w/ rod ends & hollow balls) (requires 5mm aluminum wrench #5477)**
3139X **Turnbuckles, aluminum (red-anodized), toe links, 59mm (2) (assembled with rod ends & hollow balls) (requires 5mm aluminum wrench #5477)**
3745 Turnbuckles, toe link, 59mm (78mm center to center) (2) (assembled with rod ends and hollow balls)
2746 Washers, 3x6mm metal (12)

Suspension Linkage

3643X **Camber links, front (TUBES blue-anodized, 7075-T6 aluminum, stronger than titanium) (83mm) (2)/ rod ends (4)/ aluminum wrench (1) (#2579 3x15 BCS (4) required for installation)**
3643G **Camber links, front (TUBES green-anodized, 7075-T6 aluminum, stronger than titanium) (83mm) (2)/ rod ends (4)/ aluminum wrench (1) (#2579 3x15 BCS (4) required for installation)**
3643R **Camber links, front (TUBES red-anodized, 7075-T6 aluminum, stronger than titanium) (83mm) (2)/ rod ends (4)/ aluminum wrench (1) (#2579 3x15 BCS (4) required for installation)**
3644X **Camber links, rear (TUBES blue-anodized, 7075-T6 aluminum, stronger than titanium) (73mm) (2)/ rod ends (4)/ aluminum wrench (1) (#2579 3x15 BCS (4) required for installation)**
3644G **Camber links, rear (TUBES green-anodized 7075-T6 aluminum, stronger than titanium) (73mm) (2)/ rod ends (4)/ aluminum wrench (1) (#2579 3x15 BCS (4) required for installation)**
3644R **Camber links, rear (TUBES red-anodized, 7075-T6 aluminum, stronger than titanium) (73mm) (2)/ rod ends (4)/ aluminum wrench (1) (#2579 3x15 BCS (4) required for installation)**
5525 Rod ends (12)/ hollow balls (12)
5347 Rod ends, Revo® (large) with hollow balls (12)
3739 Screw pin set (Rustler®/ Bandit/ Stampede®)
5529 Shim set, 3x7x1mm (2), 3x6x0.5mm (4), 3x7x2mm (2)/ hollow balls, captured (4)
2640 Suspension pins, 44mm (2) w/ e-clips
3640 Suspension screw pin set, steel (hex drive) (requires part #2640 for a complete suspension pin set) (Bandit, Rustler®, Stampede®)
3737A **Turnbuckle, aluminum (blue-anodized), 39mm (1)(assembled w/rod ends)/hollow balls (2) (fits front & rear on Slash)**
3737 **Turnbuckle, aluminum (red-anodized), 39mm (1) (assembled w/rod ends)/hollow balls (2) (fits front & rear on Slash)**
3741A **Turnbuckles, aluminum (blue-anodized), camber links, front, 39mm (2), rear, 49mm (2) (assembled w/rod ends & hollow balls)/ wrench**
3139A **Turnbuckles, aluminum (blue-anodized), toe links, 59mm (2) (assembled w/ rod ends & hollow balls) (requires 5mm aluminum wrench #5477)**
3741X **Turnbuckles, aluminum (red-anodized), camber links, front, 39mm (2), rear, 49mm (2) (assembled w/ rod ends & hollow balls)/wrench**
3139X **Turnbuckles, aluminum (red-anodized), toe links, 59mm (2) (assembled with rod ends & hollow balls) (requires 5mm aluminum wrench #5477)**
3644 Turnbuckles, camber link, 39mm (69mm center to center) (assembled with rod ends and hollow balls) (1 left, 1 right) (fits front & rear on Slash)
3745 Turnbuckles, toe link, 59mm (78mm center to center) (2) (assembled with rod ends and hollow balls)

Team Traxxas Items

2514 **Decal sheet, racing sponsors**
6160X **DVD, Maxx® Power! Full Throttle Action (sleeve)**
9950 **Official Team Traxxas® racing decal set (flag logo/ 6-color)**
9909 **Traxxas® racing banner, red & black (3x7 feet)**

Tires & Wheels

5116 Ball bearings, blue rubber sealed (5x11x4mm) (2)
5854 **Hub retainer, 17mm hubs, M4 X 0.7 (4) (use with #5853X, #6856X, #6469)**
3647 Nuts, 4mm flanged nylon locking (steel, serrated) (8)
1747R **Nuts, aluminum, flanged, serrated (4mm) (blue-anodized) (4)**
1747G **Nuts, aluminum, flanged, serrated (4mm) (green-anodized) (4)**
1747P **Nuts, aluminum, flanged, serrated (4mm) (pink-anodized) (4)**
1747P **Nuts, aluminum, flanged, serrated (4mm) (pink-anodized) (4)**
1985 PTFE-coated washers, 5x8x0.5mm (20) (use with ball bearings)
1647 Silicone grease
2754 Stub axle pins (4)
5864 Tire & wheel assy, glued (SCT black, orange beadlock wheels, SCT off-road racing tires, foam inserts) (2) (2WD front)
5885A **Tire & wheel assy, glued (SCT Split-Spoke, black, blue beadlock wheels, BFGoodrich® Mud-Terrain™ T/A® KM2 tires, inserts) (2) (2WD Front)**
5883A **Tire & wheel assy, glued (SCT Split-Spoke, black, blue beadlock wheels, BFGoodrich® Mud-Terrain™ T/A® KM2 tire, inserts) (2) (4WD f/r, 2WD rear)**
5880X **Tires & wheels, assembled, glued (SCT satin chrome, beadlock style wheels, Kumho tires, foam inserts) (2) (4WD front/rear, 2WD rear only)**
5880 **Tires & wheels, assembled, glued (SCT satin chrome, black beadlock style wheels, Kumho tires, foam inserts) (2) (4WD front/rear, 2WD rear only)**
5882 **Tires & wheels, assembled, glued (SCT Split-Spoke satin chrome, black beadlock style wheels, Kumho tires, foam inserts) (2) (2WD front)**

BFGoodrich® Tires Trademarks are used under license from Michelin Group Companies.

SLASH™ OBA (58034-2)

6873X	**Tires & wheels, assembled, glued (S1 ultra-soft off-road racing compound) (SCT Split-Spoke satin chrome, black beadlock style wheels, BFG Mud-Terrain tires, foam inserts) (2) (4WD front/rear, 2WD rear only)**
5882R	**Tires & wheels, assembled, glued (S1 ultra-soft off-road racing compound) (SCT Split-Spoke satin chrome, black beadlock style wheels, Kumho tires, foam inserts) (2) (2WD front)**
6874R	**Tires & wheels, assembled, glued (S1 ultra-soft off-road racing compound) (SCT Split-Spoke satin chrome, black beadlock style wheels, Kumho tires, foam inserts) (2) (4WD front/rear, 2WD rear only)**
5877R	**Tires & wheels, assembled, glued (S1 ultra-soft, off-road racing compound) (SCT Split-Spoke chrome, red beadlock style wheels, BFGoodrich® Mud-Terrain™ T/A® KM2 tires) (2) (2WD front)**
6873R	**Tires & wheels, assembled, glued (S1 ultra-soft, off-road racing compound) (SCT Split-Spoke chrome, red beadlock style wheels, BFGoodrich® Mud-Terrain™ T/A® KM2 tires, foam inserts) (2) (4WD f/r, 2WD rear)**
5863	Tires & wheels, assembled, glued (SCT black, orange beadlock wheels, dual profile (2.2" outer, 3.0" inner), SCT off-road racing tire, foam inserts) (2) (4WD f/r, 2WD rear) (TSM® rated)
5869	**Tires & wheels, assembled, glued (SCT chrome, red beadlock style wheels, BFGoodrich® Mud-Terrain™ T/A® KM2 tires, foam inserts) (2) (2WD front)**
5867	**Tires & wheels, assembled, glued (SCT chrome, red beadlock style wheels, BFGoodrich® Mud-Terrain™ T/A® KM2 tires, foam inserts) (2)(4WD front/rear, 2WD rear only)**
5873R	**Tires & wheels, assembled, glued (SCT satin chrome red beadlock wheels, ultra-soft S1 compound off-road racing tires, inserts) (2) (2WD rear, 4WD f/r)**
5881X	**Tires & wheels, assembled, glued (SCT satin chrome, beadlock style wheels, Kumho tires, foam inserts) (2) (2WD front)**
5875	Tires & wheels, assembled, glued (SCT satin chrome, beadlock style wheels, SCT off-road racing tires, foam inserts) (2) (2WD front)
5873	Tires & wheels, assembled, glued (SCT satin chrome, beadlock style wheels, SCT off-road racing tires, foam inserts) (2) (4WD front/rear, 2WD rear only) (TSM rated)
5878	**Tires & wheels, assembled, glued (SCT satin chrome, black beadlock style wheels, BFGoodrich® Mud-Terrain™ T/A® KM2 tires, foam inserts) (2)(4WD front/rear, 2WD rear only)**
5881	**Tires & wheels, assembled, glued (SCT satin chrome, black beadlock style wheels, Kumho tires, foam inserts) (2) (2WD front)**
5875X	**Tires & wheels, assembled, glued (SCT satin chrome, black beadlock style wheels, SCT off-road racing tires, foam inserts) (2) (2WD front)**
5873X	**Tires & wheels, assembled, glued (SCT satin chrome, black beadlock style wheels, SCT off-road racing tires, foam inserts) (2) (4WD front/rear, 2WD rear only)**
5873A	**Tires & wheels, assembled, glued (SCT satin chrome, red-beadlock style wheels, SCT off-road tires, foam inserts) (2) (4WD front/rear, 2WD rear only)**
6873A	**Tires & wheels, assembled, glued (SCT Split-Spoke chrome, red beadlock style wheels, BFGoodrich® Mud-Terrain™ T/A® KM2 tires, foam inserts) (2) (4WD f/r, 2WD rear)**
5891	**Tires & wheels, assembled, glued (SCT Split-Spoke satin chrome, beadlock style wheels, paddle tires, foam inserts) (2) (4WD front/rear, 2WD rear only) (TSM rated)**
6873	**Tires & wheels, assembled, glued (SCT Split-Spoke satin chrome, black beadlock style wheels, BFGoodrich® Mud-Terrain™ T/A® KM2 tires, foam inserts) (2) (4WD f/r, 2WD rear) (TSM® rated)**
6874	**Tires & wheels, assembled, glued (SCT Split-Spoke satin chrome, black beadlock style wheels, Kumho tires, foam inserts) (2) (4WD front/rear, 2WD rear only)**
5885	**Tires & wheels, assembled, glued (SCT Split-Spoke, black, satin chrome beadlock wheels, BFGoodrich® Mud-Terrain™ T/A® KM2 tires, foam inserts) (2) (2WD Front)**
5883	**Tires & wheels, assembled, glued (SCT Split-Spoke, black, satin chrome beadlock wheels, BFGoodrich® Mud-Terrain™ T/A® KM2 tire, foam inserts) (2) (4WD f/r, 2WD rear)**
5877A	**Tires & wheels, assembled, glued (SCT Split-Spoke, chrome red beadlock style wheels, BFGoodrich® Mud-Terrain™ T/A® KM2 tires, foam inserts) (2) (2WD front)**
5877	**Tires & wheels, assembled, glued (SCT Split-Spoke, satin chrome, black beadlock wheels, BFGoodrich® Mud-Terrain™ T/A® KM2 tires, foam inserts) (2) (2WD front)**
5865	**Tires & wheels, assembled, glued (SCT, chrome, green beadlock wheel, BFGoodrich® Mud-Terrain™ T/A® KM2 tire, foam inserts) (2) (2WD front only)**
6876	**Tires & wheels, assembled, glued (SCT, chrome, green beadlock wheel, BFGoodrich® Mud-Terrain™ T/A® KM2 tire, foam inserts) (2) (4WD front/rear, 2WD rear only)**
6871	**Tires, BFGoodrich® Mud-Terrain T/A® KM2 (dual profile 4.3x1.7-2.2/3.0") (2)/ foam inserts (2)**
6871R	**Tires, BFGoodrich® Mud-Terrain T/A® KM2 , ultra-soft (S1 off-road racing compound) (dual profile 4.3x1.7- 2.2/3.0") (2)/ foam inserts (2)**
6870	**Tires, Kumho (dual profile 4.3x1.7- 2.2/3.0") (2)/ foam inserts (2)**
6870R	**Tires, Kumho, ultra-soft (S1 off-road racing compound) (dual profile 4.3x1.7- 2.2/3.0") (2)/ foam inserts (2)**
5871	Tires, off-road racing, SCT dual profile 4.3x1.7- 2.2/3.0" (2)/ foam inserts (2)
5871R	**Tires, ultra-soft, S1 compound for off-road racing, SCT dual profile 4.3x1.7- 2.2/3.0" (2)/ foam inserts (2)**
1654	Wheel hubs, hex (rear) (2)/ stub axle pins (2)
3654	Wheel hubs, hex (tall offset, Rustler®/Stampede® front) (2)/ axle pins (2.5x10mm) (2)
5853X	**Wheel hubs, splined, 17mm, short (2), long (2)/wheel nuts, splined, 17mm (4) (blue-anodized)/ hub retainer M4x0.7 (4)/axle pin (4)/wrench, 5mm**
5353	**Wheel nuts, splined, 17mm (blue-anodized) (4)**
5480X	**Wheel wrench, splined, 17mm**
5870X	Wheels, SCT black, orange beadlock style, dual profile (2.2" outer, 3.0" inner) (2WD front) (2)
5868X	Wheels, SCT black, orange beadlock style, dual profile (2.2" outer, 3.0" inner) (4WD f/r, 2WD rear) (2)
5870	Wheels, SCT chrome, red beadlock style, dual profile (2.2" outer, 3.0" inner) (2WD front) (2)
5868	Wheels, SCT chrome, red beadlock style, dual profile (2.2" outer, 3.0" inner) (4WD front/rear, 2WD rear only) (2)
5874	Wheels, SCT satin chrome, beadlock style, dual profile (2.2" outer, 3.0" inner) (2WD front)
5872	Wheels, SCT satin chrome, beadlock style, dual profile (2.2" outer, 3.0" inner) (4WD front/rear, 2WD rear only)
5872X	**Wheels, SCT satin chrome, black beadlock style SCT, dual profile (2.2" outer, 3.0" inner) (4WD front/rear, 2WD rear only) (2)**
5874X	**Wheels, SCT satin chrome, black beadlock style, dual profile (2.2" outer, 3.0" inner) (2WD front) (2)**
5874A	**Wheels, SCT satin chrome, red beadlock style, dual profile (2.2" outer, 3.0" inner) (2WD front) (2)**
5872A	**Wheels, SCT satin chrome, red beadlock style, dual profile (2.2" outer, 3.0" inner) (4WD front/rear, 2WD rear only) (2)**
5886A	**Wheels, SCT Split-Spoke, black, blue beadlock style, dual profile (2.2" outer, 3.0" inner) (2WD front) (2)**
5884A	**Wheels, SCT Split-Spoke, black, blue beadlock style, dual profile (2.2" outer, 3.0" inner) (4WD f/r, 2WD rear) (2)**
5886	Wheels, SCT Split-Spoke, black, satin chrome beadlock style, dual profile (2.2" outer, 3.0" inner) (2WD front) (2)
5884	Wheels, SCT Split-Spoke, black, satin chrome beadlock style, dual profile (2.2" outer, 3.0" inner) (4WD f/r, 2WD rear) (2)
6872X	**Wheels, SCT Split-Spoke, chrome, green beadlock style, dual profile (2.2" outer, 3.0" inner) (4WD front/rear, 2WD rear) (2)**
5876A	Wheels, SCT Split-Spoke, chrome, red beadlock style, dual profile (2.2" outer, 3.0" inner) (2WD front) (2)
6872A	Wheels, SCT Split-Spoke, chrome, red beadlock style, dual profile (2.2" outer, 3.0" inner) (4WD front/rear, 2WD rear) (2)
5876	**Wheels, SCT Split-Spoke, satin chrome, black beadlock style, dual profile (2.2" outer, 3.0" inner) (2WD front) (2)**
6872	**Wheels, SCT Split-Spoke, satin chrome, black beadlock style, dual profile (2.2" outer, 3.0" inner) (4WD front/rear, 2WD rear only) (2)**
5866	**Wheels, SCT, chrome, green beadlock style, dual profile (2.2" outer, 3.0" inner) (2) (2WD front only)**
6875	**Wheels, SCT, chrome, green beadlock style, dual profile (2.2" outer, 3.0" inner) (2) (4WD front/rear, 2WD rear only)**

Transmission Components

1552	**Motor screws (3x8mm hex cap) (6)/washers (6)/ wrench**
4607	**Ball bearings (5x11x4mm) (8)**
5116	Ball bearings, blue rubber sealed (5x11x4mm) (2)
3792	Cover, gear/ rubber gear cover plug/ 3x6 RM (2)
3790	Gear adapter, fixed
3691	**Gearbox halves (l&r) (black) w/ idler gear shaft**
3691A	Gearbox halves (l&r) (grey) w/ idler gear shaft
5148	Grease, white lithium
3696	Idler gear, steel (30-tooth)
3793	Input shaft (slipper shaft) / spring pin
2381X	Main diff with steel ring gear/ side cover plate/ screws (Bandit, Stampede®, Rustler®)
2382	Planet gears (4)/ planet shafts (4)/ sun gears (2)/sun gear alignment shaft (1) all hardened steel
2388X	Planetary gear differential with steel ring gear (complete) (fits Bandit, Stampede®, Rustler®)
5552X	Rebuild kit, slipper clutch (steel disc/ friction pads (3)/ spring (2)/ pin/ 4.0mm NL (1)/ 5.0mm NL (1))
2554	Screws, 3x6mm cap-head machine (hex drive) (6)
3931	Screws, 3x8mm flat-head machine (hex drive) (6)
1647	Silicone grease

BFGoodrich® Tires Trademarks are used under license from Michelin Group Companies.

5556	Slipper pressure plate & hub (aluminum alloy)
3195	Top drive gear, steel (22-tooth)

Traxxas Tools

3433X	**Body reamer (aluminum handle)**
3433	**Body reamer (plastic handle)**
3436	**Cap, body reamer**
3432	**Scissors, curved tip**
3431	**Scissors, straight tip**
8712	**Speed Bit Essentials Set, hex and nut driver, 7-piece, includes premium handle (medium), travel pouch, hex drivers (straight: 1.5mm, 2.0mm, 2.5mm) and nut drivers (5.0mm, 5.5mm, 7.0mm, and 8.0mm), 1/4" drive**
8721	**Speed bit handle, medium (one piece)**
8720	**Speed bit handle, premium, large (rubber overmold)**
8722	**Speed bit handle, premium, medium (rubber overmold)**
8710	**Speed Bit Master Set, hex and nut driver, 13-piece, includes premium handle (medium), travel pouch, hex drivers (straight: 1.5mm, 2.0mm, 2.5mm, 3.0mm), (ball-end: 2.0mm, 2.5mm, 3.0mm), and nut drivers (4.00mm, 4.50mm, 5.00mm, 5.50mm, 7.00mm, 8.00mm),**
8711	**Speed Bit Master Set, hex driver, 7-piece straight and ball end, includes premium handle (medium), travel pouch, hex drivers (straight: 1.5mm, 2.0mm, 2.5mm, 3.0mm) (ball end: 2.0mm, 2.5mm, 3.0mm), 1/4" drive**
8719	**Speed Bit Master Set, nut driver, 6-piece, includes premium handle (medium), travel pouch, and nut drivers (4.0mm, 4.5mm, 5.0mm, 5.5mm, 7.0mm, 8.0mm), 1/4" drive**
8716	**Speed Bit Set, hex driver, 2-piece ball-end (2.0mm, 2.5mm), 1/4" drive**
8716X	**Speed Bit Set, hex driver, 3-piece ball-end (2.0mm, 2.5mm, 3.0mm), 1/4" drive**
8715	**Speed Bit Set, hex driver, 3-piece straight (1.5mm, 2.0mm, 2.5mm), 1/4" drive**
8715X	**Speed Bit Set, hex driver, 4-piece straight (1.5mm, 2.0mm, 2.5mm, 3.0mm), 1/4" drive**
3415	**Tool set with pouch (includes 1.5mm, 2.0mm, 2.5mm, 3.0mm, 3.5mm, 4mm drivers/ 4mm, 5mm, 5.5mm, 7mm and 8mm nut drivers/ 2mm, 4mm, and 5mm slotted screwdrivers/ #00 Phillips, #0 Phillips, and #1 Phillips screwdrivers/ 4mm and 8mm wrench/ driver handle**

Turnbuckles & Threaded Rods

3643X	**Camber links, front (TUBES blue-anodized, 7075-T6 aluminum, stronger than titanium) (83mm) (2)/ rod ends (4)/ aluminum wrench (1) (#2579 3x15 BCS (4) required for installation)**
3643G	**Camber links, front (TUBES green-anodized, 7075-T6 aluminum, stronger than titanium) (83mm) (2)/ rod ends (4)/ aluminum wrench (1) (#2579 3x15 BCS (4) required for installation)**
3643R	**Camber links, front (TUBES red-anodized, 7075-T6 aluminum, stronger than titanium) (83mm) (2)/ rod ends (4)/ aluminum wrench (1) (#2579 3x15 BCS (4) required for installation)**
3644X	**Camber links, rear (TUBES blue-anodized, 7075-T6 aluminum, stronger than titanium) (73mm) (2)/ rod ends (4)/ aluminum wrench (1) (#2579 3x15 BCS (4) required for installation)**
3644G	**Camber links, rear (TUBES green-anodized 7075-T6 aluminum, stronger than titanium) (73mm) (2)/ rod ends (4)/ aluminum wrench (1) (#2579 3x15 BCS (4) required for installation)**
3644R	**Camber links, rear (TUBES red-anodized, 7075-T6 aluminum, stronger than titanium) (73mm) (2)/ rod ends (4)/ aluminum wrench (1) (#2579 3x15 BCS (4) required for installation)**
5525	Rod ends (12)/ hollow balls (12)
5347	Rod ends, Revo® (large) with hollow balls (12)
3737A	**Turnbuckle, aluminum (blue-anodized), 39mm (1)(assembled w/rod ends)/hollow balls (2) (fits front & rear on Slash)**
3737	**Turnbuckle, aluminum (red-anodized), 39mm (1) (assembled w/rod ends)/hollow balls (2) (fits front & rear on Slash)**
3741A	**Turnbuckles, aluminum (blue-anodized), camber links, front, 39mm (2), rear, 49mm (2) (assembled w/rod ends & hollow balls)/ wrench**
3139A	**Turnbuckles, aluminum (blue-anodized), toe links, 59mm (2) (assembled w/ rod ends & hollow balls) (requires 5mm aluminum wrench #5477)**
3741X	**Turnbuckles, aluminum (red-anodized), camber links, front, 39mm (2), rear, 49mm (2) (assembled w/ rod ends & hollow balls)/wrench**
3139X	**Turnbuckles, aluminum (red-anodized), toe links, 59mm (2) (assembled with rod ends & hollow balls) (requires 5mm aluminum wrench #5477)**
3644	Turnbuckles, camber link, 39mm (69mm center to center) (assembled with rod ends and hollow balls) (1 left, 1 right) (fits front & rear on Slash)
3745	Turnbuckles, toe link, 59mm (78mm center to center) (2) (assembled with rod ends and hollow balls)

If you have questions or need technical assistance, call Traxxas at:

1-888-TRAXXAS

(1-888-872-9927) (U.S. residents only)

For orders, calls outside the U.S., and other information, call 972-549-3000, or fax to 972-549-3011 e-mail Traxxas at support@Traxxas.com

TRAXXAS.com

TSM
TRAXXAS STABILITY MANAGEMENT

SLASH VXL
BRUSHLESS

MODEL 58076-4

ELECTRIC POWERED 2WD
BRUSHLESS SHORT-COURSE TRUCK



TRAXXAS SCT TIRES, 2.2", PRE-GLUED WITH FOAM INSERTS

VELINEON BRUSHLESS POWER SYSTEM

TQi 2.4GHz TRANSMITTER COMPATIBLE WITH TRAXXAS LINK WIRELESS MODULE

THE NUMBER ONE BRUSHLESS SHORT-COURSE TRUCK

The award-winning Traxxas Slash VXL, now with Traxxas Stability Management (TSM). Slash VXL crushes the competition with brute force acceleration and unmatched top speed. With an optional Power Cell 7-cell NiMH battery (sold separately), Slash VXL rockets to over 40mph. Install optional 3S LiPo power, and Slash VXL blasts past 60mph! The Slash VXL combines extreme brushless horsepower and Traxxas Stability Management with the proven fun and durability that have made Slash the number 1 selling short course truck. Hard-core acceleration completely blows everything else away. Out of the box, Velineon is optimized to deliver the tire-melting horsepower, benchmark speed, and precision throttle response you expect from brushless. Best of all, it's brushless done the Traxxas way: wicked fast and easy to use. There's no tricky programming to figure out or a glossary of new vocabulary to learn. Just plug it in and it works.

*With 3S LiPo battery (sold separately) and optional gearing

Front Assembly

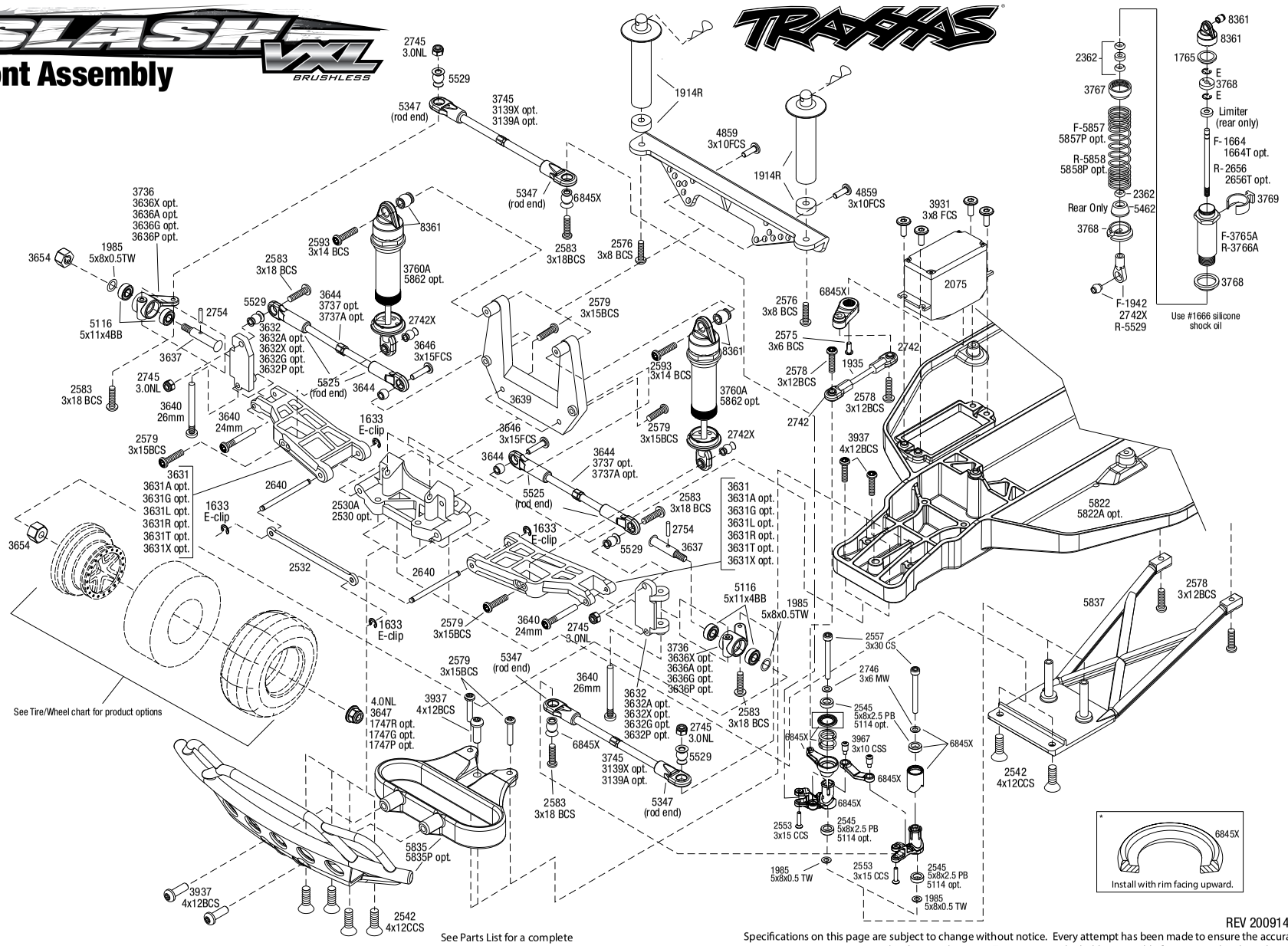

See Parts List for a complete listing of optional accessories.

REV 200914-R10

Specifications on this page are subject to change without notice. Every attempt has been made to ensure the accuracy of this drawing; however, Traxxas cannot be held responsible for typographical or other errors.

SLASH™ VXL (58076-4)

EXPLODED VIEWS

REV 200914-R10

Specifications on this page are subject to change without notice. Every attempt has been made to ensure the accuracy of this drawing; however, Traxxas cannot be held responsible for typographical or other errors.

See Parts List for a complete listing of optional accessories.

Chassis Assembly

Questions? **Call toll-free, 1-888-TRAXXAS**

Rear Assembly

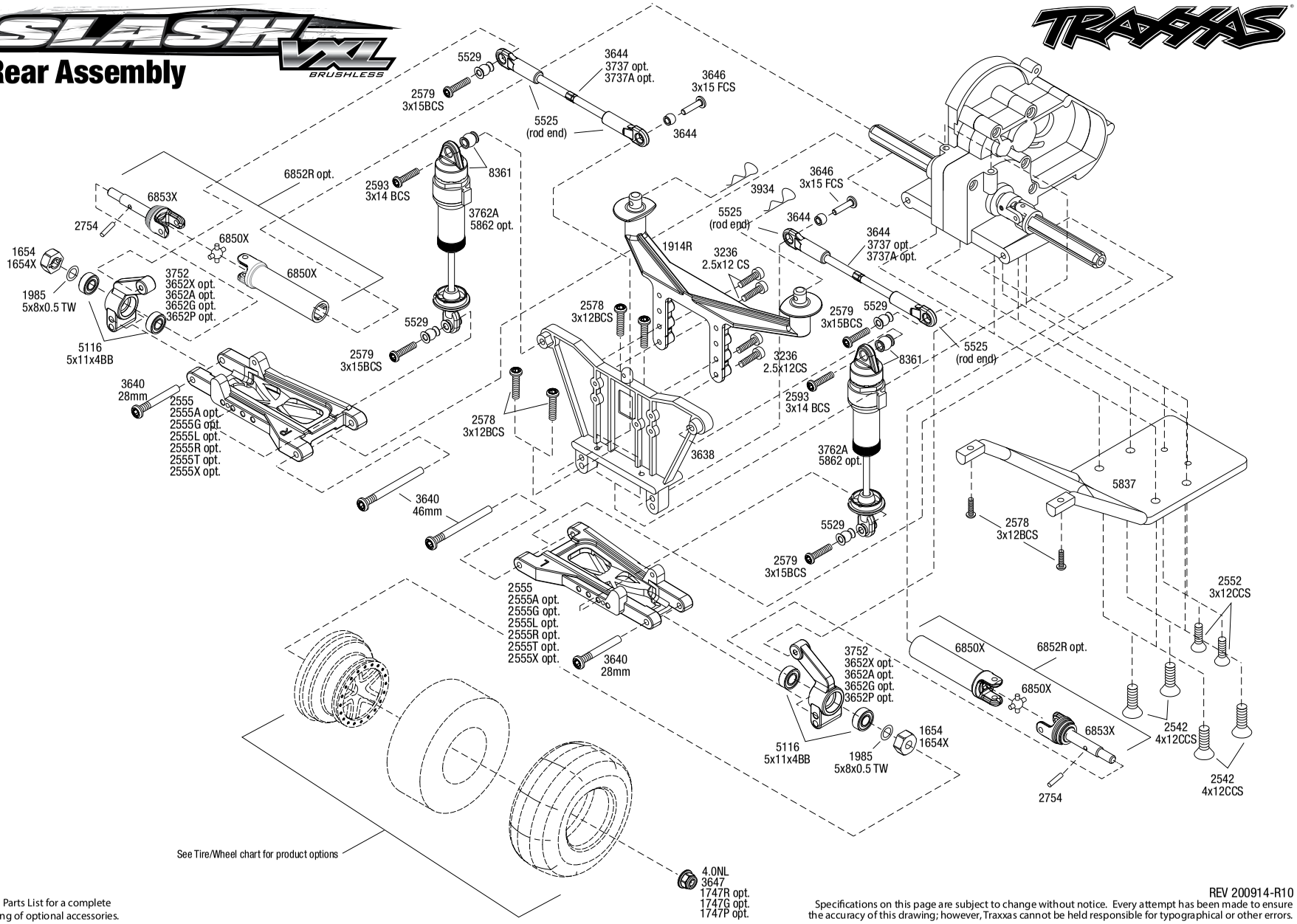

See Parts List for a complete listing of optional accessories.

REV 200914-R10

Specifications on this page are subject to change without notice. Every attempt has been made to ensure the accuracy of this drawing; however, Traxxas cannot be held responsible for typographical or other errors.

SLASH™ VXL (58076-4)

EXPLODED VIEWS

Transmission Assembly

REV 200914-R10

Specifications on this page are subject to change without notice. Every attempt has been made to ensure the accuracy of this drawing; however, Traxxas cannot be held responsible for typographical or other errors.

See Parts List for a complete listing of optional accessories.

Questions? **Call toll-free, 1-888-TRAXXAS**

PARTS SHOWN IN BOLD ARE OPTIONAL ACCESSORIES.

Part categories and individual part listings are arranged alphabetically.

Bearings & Bushings

4607 **Ball bearings (5x11x4mm) (8)**
2728 **Ball bearings (5x8x2.5mm) (2)**
5116 Ball bearings, blue rubber sealed (5x11x4mm) (2)
5114 **Ball bearings, blue rubber sealed (5x8x2.5mm) (2)**
2545 Bellcrank bushings (plastic) (5x8x2.5mm) (4)
1985 PTFE-coated washers, 5x8x0.5mm (20) (use with ball bearings)

Body & Accessories

1926 **Antenna caps, vinyl (2)/ antenna spool**
1726 Antenna, tube (1)/ vinyl antenna cap (1)/ wire retainer (1)
3935 Body clip (mounting clip), angled, 90-degrees (10)
3935A **Body clip (mounting clip), angled, 90-degrees (black) (10)**
3934 Body clips, heavy duty (12)
1914R Body mount, front & rear (black)/ body posts, 52mm (2), 38mm (2), 25mm (2), 6.5mm (2)/ body post extensions (4)/ hardware
1815 Body washers (8)
6716 **Body washers, foam, 2mm (2)/ 3mm (2)/ 4mm (4)**
6811 **Body, Slash 4X4 (clear, requires painting)/ window masks/ decal sheet**
6811R **Body, Slash 4X4, heavy duty (clear, untrimmed, requires painting)/ window masks/ decal sheet**
5850 **Body, Slash 4X4, orange (painted, decals applied)**
6811X **Body, Slash 4X4, ProGraphix (Graphics are printed, requires paint & final color application)/ decal sheet**
6849 **Body, Slash 4X4/Slash, Fox Edition (painted, decals applied)**
2514 **Decal sheet, racing sponsors**
5813 **Decal Sheet, Slash**
9950 **Official Team Traxxas® racing decal set (flag logo/ 6-color)**
5846 **Paint masks, body**

Chassis & Attachments

5526 Antenna crimp nut, aluminum (blue-anodized)/ antenna nut tools
5526R **Antenna crimp nut, aluminum (red-anodized)/ antenna nut tools**
1914R Body mount, front & rear (black)/ body posts, 52mm (2), 38mm (2), 25mm (2), 6.5mm (2)/ body post extensions (4)/ hardware
5624 Box, receiver (sealed)/ foam pad/ silicone grease/ 3x8mm BCS (2)/ 2.5x8mm CS (2)/ 3x6mm BCS (2)
5835 Bumper, front/ bumper mount, front (black)
5835P **Bumper, front/ bumper mount, front (pink)**
5836 Bumper, rear/ bumper mount, rear (black)
5836P **Bumper, rear/ bumper mount, rear (pink)**
5830 **Chassis conversion kit, low CG (Slash)**
5832 **Chassis, low CG (black)**
5832A **Chassis, low CG (blue)**
5832G **Chassis, low CG (grey)**
5822 Chassis, Slash
5822A **Chassis, Slash (black)**
5827 Hold down, battery/ hold down retainer/ battery post/ foam spacer/ angled body clip
5827X **Hold down, battery/ hold down retainer/ battery post/ foam spacer/ angled body clip (allows for installation of taller, multi-cell batteries)**
5831 **Lower chassis, low CG (black)**
5831A **Lower chassis, low CG (blue)**
5831G **Lower chassis, low CG (grey)**
5823 Nerf bars, chassis (black)
5833 **Nerf bars, low CG (black)**
5833A **Nerf bars, low CG (blue)**
5833G **Nerf bars, low CG (grey)**
5625 Seal kit, receiver box (includes o-ring, seals, and silicone grease)
5837 Skidplates, front & rear (black)
5185 **Tires, rubber (2) (fits Traxxas® wheelie bar wheels)**
4974 **Wheelie bar arm (1)/ connector (1)/ 3x12 SS (hex drive) (4)**
3677A **Wheelie bar mount (1) / hardware (green)**
3677P **Wheelie bar mount (1) / hardware (pink)**
3677 Wheelie bar mount (1)/ hardware (black)
3677X **Wheelie bar mount (1)/ hardware (blue)**
3678 **Wheelie bar, assembled (black) (fits Slash, Bandit, Rustler®, Stampede® series)**
3678X **Wheelie bar, assembled (blue) (fits Slash, Bandit, Rustler®, Stampede® series)**
3678A **Wheelie bar, assembled (green) (fits Slash, Bandit, Rustler®, Stampede® series)**
3678P **Wheelie bar, assembled (pink) (fits Slash, Bandit, Rustler®, Stampede® series)**
4976 **Wheels (4)/ axles (2) (for T-Maxx®/E-Maxx wheelie bar)**
5186A **Wheels, aluminum (blue-anodized) (2)/ 5x8mm ball bearings (4)/ axles (2)/ rubber tires (2)**
5186 **Wheels, aluminum (red-anodized) (2)/ 5x8mm ball bearings (4)/ axles (2)/ rubber tires (2)**

Differential Components

2381X Main diff with steel ring gear/ side cover plate/ screws (Bandit, Stampede®, Rustler®)
2382 Planet gears (4)/ planet shafts (4)/ sun gears (2)/sun gear alignment shaft (1) all hardened steel
2388X Planetary gear differential with steel ring gear (complete) (fits Bandit, Stampede®, Rustler®)
5169 Screws, 2.6x8mm countersunk machine (6)
1647 Silicone grease

Driveline Components

5116 Ball bearings, blue rubber sealed (5x11x4mm) (2)
9059X **Cross pin (2)/ drive pin (2) (repairs 2 axle shafts)**
9057X **Differential output shafts, steel-splined constant-velocity (2)**
6828X Differential output yokes, heavy duty (2)/ screw pin (2)
6852X Driveshaft assembly, rear, heavy duty (1) (left or right) (fully assembled, ready to install)/ screw pin (1)
6852R **Driveshafts, rear, steel-spline constant-velocity (complete assembly) (2)**
9052X **Driveshafts, rear, steel-spline constant-velocity (complete assembly) (2)**
9055X **Half shaft, external splined (steel-spline constant velocity) (1)**
6750 **Half shaft, external splined (steel-spline constant-velocity) (1)**
9056X **Half shaft, internal splined (steel-spline constant velocity) (1)**
6751 **Half shaft, internal splined (steel-spline constant-velocity) (1)**
6850X Half shafts, heavy duty (external splined (2)/ internal splined (2))/ metal u-joints (4)
6757 **Rebuild kit, steel-splined constant-velocity driveshafts (includes pins, dustboots, lube, and hardware)**
9058X **Rebuild kit, steel-splined constant-velocity driveshafts (includes pins, lube, and hardware for two axle shafts)**
3752 Stub axle carriers (2) (requires 5x11x4mm bearings)
3652A **Stub axle carriers, Rustler®/Stampede®/Bandit (2), 6061-T6 aluminum (blue-anodized)/ 5x11mm ball bearings (4)**
3652G **Stub axle carriers, Rustler®/Stampede®/Bandit (2), 6061-T6 aluminum (green-anodized)/ 5x11mm ball bearings (4)**
3652P **Stub axle carriers, Rustler®/Stampede®/Bandit (2), 6061-T6 aluminum (pink-anodized)/ 5x11mm ball bearings (4)**
3652X **Stub axle carriers, Rustler®/Stampede®/Bandit (2), 6061-T6 aluminum (red-anodized)/ 5x11mm ball bearings (4)**
2754 Stub axle pins (4)
6754 **Stub axle, front, 5mm (steel-splined constant-velocity driveshaft) (1)**
6753 **Stub axle, rear, 5mm (steel-splined constant-velocity driveshaft) (1)**
9053X **Stub axle, rear, steel-splined constant velocity (1)**
6853X Stub axles, rear, heavy duty (2)/pins (2)

Front Suspension & Steering

3637 Axles (front) (2)
2728 **Ball bearings (5x8x2.5mm) (2)**
5116 Ball bearings, blue rubber sealed (5x11x4mm) (2)
2545 Bellcrank bushings (plastic) (5x8x2.5mm) (4)
2530 **Bulkhead (front) (black)**
2530A Bulkhead (front) (grey)
3643X **Camber links, front (TUBES blue-anodized, 7075-T6 aluminum, stronger than titanium) (83mm) (2)/ rod ends (4)/ aluminum wrench (1) (#2579 3x15 BCS (4) required for installation)**
3643G **Camber links, front (TUBES green-anodized, 7075-T6 aluminum, stronger than titanium) (83mm) (2)/ rod ends (4)/ aluminum wrench (1) (#2579 3x15 BCS (4) required for installation)**
3643R **Camber links, front (TUBES red-anodized, 7075-T6 aluminum, stronger than titanium) (83mm) (2)/ rod ends (4)/ aluminum wrench (1) (#2579 3x15 BCS (4) required for installation)**
3632 Caster blocks (l&r) (30-degree)
3632A **Caster blocks, 30-degree, blue-anodized 6061-T6 aluminum (left & right)/ suspension screw pin (2)**
3632G **Caster blocks, 30-degree, green-anodized 6061-T6 aluminum (left & right)/ suspension screw pin (2)**
3632P **Caster blocks, 30-degree, pink-anodized 6061-T6 aluminum (left & right)/ suspension screw pin (2)**
3632X **Caster blocks, 30-degree, red-anodized 6061-T6 aluminum (left & right)/ suspension screw pin (2)**

SLASH™ VXL (58076-4)

6846	Linkage, steering (3x20mm turnbuckle) (1)/ rod ends (2)/ hollow balls (2)
5347	Rod ends, Revo® (large) with hollow balls (12)
3646	Screws, 3x15mm flat-head machine (hex drive) (6)
3744	**Servo saver w/adapters**
3639	Shock tower (front)
3743	Steering bellcranks (l&r)/ draglink
3743A	**Steering bellcranks, drag link (blue-anodized T6 aluminum)/ 5x8mm ball bearings (4) hardware (assembled) (requires #3744 servo saver w/adapters)**
3743G	**Steering bellcranks, drag link (green-anodized 6061-T6 aluminum)/ 5x8mm ball bearings (4)/ hardware (assembled)**
3743P	**Steering bellcranks, drag link (pink-anodized 6061-T6 aluminum)/ 5x8mm ball bearings (4)/ hardware (assembled)**
3743X	**Steering bellcranks, drag link (red-anodized T6 aluminum)/ 5x8mm ball bearings (4) hardware (assembled) (requires #3744 servo saver w/adapters)**
6845X	Steering bellcranks/ servo saver/ servo saver spring/ servo spring retainer/servo horn, steering
3736	Steering blocks, left & right (2) (requires 5x11x4mm bearings)
3636A	**Steering blocks, Rustler®/Stampede®/Bandit (2), 6061-T6 aluminum (blue-anodized)/ 5x11mm ball bearings (4)**
3636G	**Steering blocks, Rustler®/Stampede®/Bandit (2), 6061-T6 aluminum (green-anodized)/ 5x11mm ball bearings (4)**
3636P	**Steering blocks, Rustler®/Stampede®/Bandit (2), 6061-T6 aluminum (pink-anodized)/ 5x11mm ball bearings (4)**
3636X	**Steering blocks, Rustler®/Stampede®/Bandit (2), 6061-T6 aluminum (red-anodized)/ 5x11mm ball bearings (4)**
3631	Suspension arms (front) (2)
3631X	**Suspension arms, black, front, heavy duty (2)**
3631A	**Suspension arms, blue, front, heavy duty (2)**
3631G	**Suspension arms, green, front, heavy duty (2)**
3631T	**Suspension arms, orange, front, heavy duty (2)**
3631R	**Suspension arms, red, front, heavy duty (2)**
3631L	**Suspension arms, white, front, heavy duty (2)**
2640	Suspension pins, 44mm (2) w/ e-clips
3640	Suspension screw pin set, steel (hex drive) (requires part #2640 for a complete suspension pin set) (Bandit, Rustler®, Stampede®)
2532	Tie bar, fiberglass
1935	Turnbuckles, 36mm (2)
3139A	**Turnbuckles, aluminum (blue-anodized), toe links, 59mm (2) (assembled w/ rod ends & hollow balls) (requires 5mm aluminum wrench #5477)**
3139X	**Turnbuckles, aluminum (red-anodized), toe links, 59mm (2) (assembled with rod ends & hollow balls) (requires 5mm aluminum wrench #5477)**
3644	Turnbuckles, camber link, 39mm (69mm center to center) (assembled with rod ends and hollow balls) (1 left, 1 right) (fits front & rear on Slash)
3745	Turnbuckles, toe link, 59mm (78mm center to center) (2) (assembled with rod ends and hollow balls)

Hardware

1926	**Antenna caps, vinyl (2)/ antenna spool**
1726	Antenna, tube (1)/ vinyl antenna cap (1)/ wire retainer (1)
3935	Body clip (mounting clip), angled, 90-degrees (10)
3935A	**Body clip (mounting clip), angled, 90-degrees (black) (10)**
3934	Body clips, heavy duty (12)
1589	Double-sided adhesive tape (25mm x 25mm) (2)
1633	E-clips/ C-rings
2586	Screws, 3x15mm cap-head machine (hex drive) (6)
2745	Nuts, 3mm nylon locking (12)
3647	Nuts, 4mm flanged nylon locking (steel, serrated) (8)
1747	Nuts, 4mm nylon locking (10)
1747A	**Nuts, aluminum, flanged, serrated (4mm) (red-anodized) (4)**
1985	PTFE-coated washers, 5x8x0.5mm (20) (use with ball bearings)
5525	Rod ends (12)/ hollow balls (12)
5347	Rod ends, Revo® (large) with hollow balls (12)
2742X	Rod ends, short (6)/ hollow balls (6)
3215	Screws, 2.5x6mm cap-head machine (hex drive) (6)
3965	Screws, 2.5x8mm cap-head machine (6)
2577	Screws, 3x10mm button-head machine (hex drive) (6) (use with #3744)
4859	Screws, 3x10mm flat-head machine (hex drive) (4)
2578	Screws, 3x12mm button-head machine (hex drive) (6)
2552	Screws, 3x12mm countersunk machine (6) (hex drive)
2579	Screws, 3x15mm button-head machine (hex drive) (6)
3646	Screws, 3x15mm flat-head machine (hex drive) (6)
2583	Screws, 3x18mm button-head machine (hex drive) (6)
2580	Screws, 3x20mm button-head machine (hex drive) (6)
2591	Screws, 3x23mm button-head machine (hex drive) (6)
2582	Screws, 3x30mm button-head machine (hex drive) (6)
2592	Screws, 3x40mm button-head machine (hex drive) (6)
2575	Screws, 3x6mm button-head machine (hex drive) (6)
3932	Screws, 3x6mm flat-head machine (hex drive) (6)
2576	Screws, 3x8mm button-head machine (hex drive) (6)
3931	Screws, 3x8mm flat-head machine (hex drive) (6)
3937	Screws, 4x12mm button-head machine (hex drive) (6)
2542	Screws, 4x12mm countersunk machine (hex drive) (6)
2546	Screws, 4x15mm countersunk machine (hex drive) (6)
2743	Set (grub) screws, 3mm hardened (12)
5529	Shim set, 3x7x1mm (2), 3x6x0.5mm (4), 3x7x2mm (2)/ hollow balls, captured (4)
3967	Shoulder screws 3x10 (6) (without threadlock)
3642X	**Shoulder screws, Ultra Shocks (3x12 hex drive) (6)**
2754	Stub axle pins (4)
2746	**Washers, 3x6mm metal (12)**

Motors & Electronics

1726	Antenna, tube (1)/ vinyl antenna cap (1)/ wire retainer (1)
2260	**BEC assembly (complete)**
3340	**Cooling fan, Velineon® VXL-3s ESC**
3790	Gear adapter, fixed
2072A	Gear set (for 2070, 2075 servos)
2252	**Gear set, metal (for 2250, 2255 servos)**
3354R	Motor cover, endbell (Velineon® 3500)
3351R	Motor, Velineon® 3500, brushless (assembled with 12-gauge wire and gold-plated bullet connectors)
3352R	Rebuild kit, Velineon® 3500 (includes plastic endbell, 5x11x4mm ball bearings (2), 2.5x5mm BCS (with threadlock) (4), rear bushing)
3931	Screws, 3x8mm flat-head machine (hex drive) (6)
2254	**Servo case, aluminum (blue-anodized) (middle) (for 2250 servo)**
2253	**Servo case, aluminum (red-anodized) (middle) (for 2255 servo)**
2251	**Servo case, plastic (top, middle, bottom)/ gaskets/ hardware (for 2250, 2255 servos)**
2074	Servo case/gaskets (for 2056 and 2075 waterproof servos)
2075R	**Servo, digital high-speed, metal gear (ball bearing), waterproof**
2075	Servo, digital high-torque (ball bearing), waterproof
2250	**Servo, digital high-torque 330 coreless, metal gear (ball bearing), waterproof**
2255	**Servo, digital high-torque 400 brushless, metal gear (ball bearing), waterproof**
2075X	**Servo, digital high-torque, metal gear (ball bearing), waterproof**
3350R	Velineon® VXL-3s Brushless Power System, waterproof (includes VXL-3s waterproof ESC, Velineon 3500 motor, and speed control mounting plate (part #3725R))
3355R	Velineon® VXL-3s Electronic Speed Control, waterproof (brushless) (fwd/rev/brake)

Radio System, Batteries & Chargers

2849X	**4000mAh 11.1v 3-Cell 25C LiPo Battery**
2872X	**5000mAh 11.1v 3-Cell 25C LiPo Battery**
2842X	**5000mAh 7.4v 2-Cell 25C LiPo Battery**
2843X	**5800mAh 7.4v 2-Cell 25C LiPo Battery**
2857X	**6400mAh 11.1v 3-Cell 25C LiPo Battery**
2869X	**7600mAh 7.4v 2-Cell 25C LiPo Battery**
2976	**AC to DC converter, 40W**
2938X	**Adapter, Traxxas® iD® LiPo battery (adapts Traxxas iD batteries to separate balance ports)**
5526	Antenna crimp nut, aluminum (blue-anodized)/ antenna nut tools
5526R	**Antenna crimp nut, aluminum (red-anodized)/ antenna nut tools**
2943	**Battery charge indicators (green (4), blue (4), grey (4))**
6548	Battery door, transmitter (replacement for #6516, 6517, 6528, 6529, 6530 transmitters)
2923X	**Battery, Power Cell, 3000mAh (NiMH, 7-C flat, 8.4V)**
2926X	**Battery, Power Cell, 3000mAh (NiMH, 7-C hump, 8.4V)**
2940X	**Battery, Series 3 Power Cell, 3300mAh (NiMH, 7-C flat, 8.4V)**
2941X	**Battery, Series 3 Power Cell, 3300mAh (NiMH, 7-C hump, 8.4V)**
2950X	**Battery, Series 4 Power Cell, 4200mAh (NiMH, 7-C flat, 8.4V)**
2951X	**Battery, Series 4 Power Cell, 4200mAh (NiMH, 7-C hump, 8.4V)**
2960X	**Battery, Series 5 Power Cell, 5000mAh (NiMH, 7-C flat, 8.4V)**
2961X	**Battery, Series 5 Power Cell, 5000mAh (NiMH, 7-C hump, 8.4V)**
2983	**Battery/charger completer pack (includes #2969 2-amp NiMH peak detecting AC charger (1), #2923X 3000mAh 8.4V 7-cell NiMH battery (1))**
2992	**Battery/charger completer pack (includes #2970 iD® charger (1), #2843X 5800mAh 7.4V 2-cell 25C LiPo battery (1))**
2994	**Battery/charger completer pack (includes #2970 iD® charger (1), #2849X 4000mAh 11.1v 3-Cell 25C LiPo Battery (1))**
2260	**BEC assembly (complete)**
2975	**Charger, DC, 4 amp (6 - 7 cell, 7.2 - 8.4 volt, NiMH)**
2972	**Charger, EZ-Peak® Dual, 100W, NiMH/LiPo with iD® Auto Battery Identification**
2973	**Charger, EZ-Peak® Live Dual, 200W, NiMH/LiPo with iD® Auto Battery Identification**

BFGoodrich® Tires Trademarks are used under license from Michelin Group Companies.

2971	**Charger, EZ-Peak® Live, 100W, NiMH/LiPo with iD® Auto Battery Identification**
2970	**Charger, EZ-Peak® Plus, 4 amp, NiMH/LiPo with iD® Auto Battery Identification**
6525	**Communication link, telemetry expander**
6541	**Connector, power tap (with cable) (long)/ wire tie**
6512	Cover plate, Traxxas Link™ Wireless Module
2978	**Fuse, charger, 5A (2) (for #2974, 2975, 2977)**
2072A	Gear set (for 2070, 2075 servos)
2252	**Gear set, metal (for 2250, 2255 servos)**
2968X	**LiPo cell voltage checker/balancer (includes #2938X adapter for Traxxas® iD® batteries)**
2968	**LiPo cell voltage checker/balancer (requires #2938X adapter for Traxxas® iD® batteries)**
6554	**Mount, telemetry expander (fits Bandit, Rustler®, Slash 2WD)**
6535	**Mount, temperature sensor (electric motors)/ wire tie/ thermal pad**
6533	Receiver, micro, TQi 2.4GHz with telemetry & TSM (5-channel)
6552	**Seal kit, expander box (includes o-ring, seals, and silicone grease)**
6526	**Sensor, auto-detectable, temperature**
6527	**Sensor, auto-detectable, voltage**
6520	**Sensor, RPM (long)/ 3x4mm BCS (2)/ 3x4 GS (1)**
6521	**Sensor, temperature and voltage (long)**
2254	**Servo case, aluminum (blue-anodized) (middle) (for 2250 servo)**
2253	**Servo case, aluminum (red-anodized) (middle) (for 2255 servo)**
2251	**Servo case, plastic (top, middle, bottom)/ gaskets/ hardware (for 2250, 2255 servos)**
2074	Servo case/gaskets (for 2056 and 2075 waterproof servos)
2075R	**Servo, digital high-speed, metal gear (ball bearing), waterproof**
2075	Servo, digital high-torque (ball bearing), waterproof
2250	**Servo, digital high-torque 330 coreless, metal gear (ball bearing), waterproof**
2255	**Servo, digital high-torque 400 brushless, metal gear (ball bearing), waterproof**
2075X	**Servo, digital high-torque, metal gear (ball bearing), waterproof**
6553X	**Telemetry expander 2.0 and GPS module 2.0, TQi radio system**
6550X	**Telemetry expander 2.0, TQi radio system (for use only with #6551X GPS module)**
6551X	**Telemetry GPS module 2.0, TQi radio system (for use only with #6550X telemetry expander)**
6538	**Telemetry trigger magnet holders, spur gear/ magnet, 5x2mm (1)/ 3x8mm CCS (3)/ 3x10mm CCS (3)**
6540	**Telemetry trigger magnet, 5X2mm (1)**
2928	**Temperature sensor, EZ-Peak Plus**
6509R	TQi 2.4 GHz High Output radio system, 2-channel, Traxxas Link™ enabled, TSM (2-ch transmitter, 5-ch micro receiver)
6507R	**TQi 2.4 GHz High Output radio system, 4-channel with Traxxas Link™ Wireless Module, TSM (4-ch transmitter, 5-ch micro receiver)**
6528	Transmitter, TQi Traxxas Link™ enabled, 2.4GHz high output, 2-channel (transmitter only)
6529	**Transmitter, TQi Traxxas Link™ enabled, 2.4GHz high output, 3-channel (transmitter only)**
6530	**Transmitter, TQi Traxxas Link™ enabled, 2.4GHz high output, 4-channel (transmitter only)**
6511	**Traxxas Link™ Wireless Module**
3355R	Velineon® VXL-3s Electronic Speed Control, waterproof (brushless) (fwd/rev/brake)

Ready-To-Race Model

58076-4	Slash VXL: 1/10 Scale 2WD Short Course Racing Truck with TQi Traxxas Link™ Enabled 2.4GHz Radio System & Traxxas Stability Management (TSM)®

Rear Suspension

5116	Ball bearings, blue rubber sealed (5x11x4mm) (2)
3644X	**Camber links, rear (TUBES blue-anodized, 7075-T6 aluminum, stronger than titanium) (73mm) (2)/ rod ends (4)/ aluminum wrench (1) (#2579 3x15 BCS (4) required for installation)**
3644G	**Camber links, rear (TUBES green-anodized 7075-T6 aluminum, stronger than titanium) (73mm) (2)/ rod ends (4)/ aluminum wrench (1) (#2579 3x15 BCS (4) required for installation)**
3644R	**Camber links, rear (TUBES red-anodized, 7075-T6 aluminum, stronger than titanium) (73mm) (2)/ rod ends (4)/ aluminum wrench (1) (#2579 3x15 BCS (4) required for installation)**
6850X	Half shafts, heavy duty (external splined (2)/ internal splined (2))/ metal u-joints (4)
3638	Shock tower (rear)
3752	Stub axle carriers (2) (requires 5x11x4mm bearings)
3652A	**Stub axle carriers, Rustler®/Stampede®/Bandit (2), 6061-T6 aluminum (blue-anodized)/ 5x11mm ball bearings (4)**
3652G	**Stub axle carriers, Rustler®/Stampede®/Bandit (2), 6061-T6 aluminum (green-anodized)/ 5x11mm ball bearings (4)**
3652P	**Stub axle carriers, Rustler®/Stampede®/Bandit (2), 6061-T6 aluminum (pink-anodized)/ 5x11mm ball bearings (4)**
3652X	**Stub axle carriers, Rustler®/Stampede®/Bandit (2), 6061-T6 aluminum (red-anodized)/ 5x11mm ball bearings (4)**
6853X	Stub axles, rear, heavy duty (2)/pins (2)
2555	Suspension arms, (rear) (2)
2555X	**Suspension arms, black, rear, heavy duty (2)**
2555A	**Suspension arms, blue, rear, heavy duty (2)**
2555G	**Suspension arms, green, rear, heavy duty (2)**
2555T	**Suspension arms, orange, rear, heavy duty (2)**
2555R	**Suspension arms, red, rear, heavy duty (2)**
2555L	**Suspension arms, white, rear, heavy duty (2)**
3640	Suspension screw pin set, steel (hex drive) (requires part #2640 for a complete suspension pin set) (Bandit, Rustler®, Stampede®)
3644	Turnbuckles, camber link, 39mm (69mm center to center) (assembled with rod ends and hollow balls) (1 left, 1 right) (fits front & rear on Slash)

Shocks (Pro-level Aluminum)

2664	**Big Bore shock cylinder (long) (1)**
2666	**Big Bore shock cylinder (XX-long) (1)**
5862	**Big Bore shocks (hard-anodized & PTFE-coated T6 aluminum) (assembled with TiN shafts and springs) (front & rear) (4)**
2660	**Big Bore shocks (long) (hard-anodized & PTFE-coated T6 aluminum) (assembled with TiN shafts) w/o springs (front) (2)**
2662	**Big Bore shocks (XX-long) (hard-anodized & PTFE-coated T6 aluminum) (assembled with TiN shafts) w/o springs (rear) (2)**
2669	**Piston head set (2-hole (2)/ 3-hole (2))/ shock mounting bushings & washers (2) (Big Bore Shocks)**
2362	**Rebuild kit, Ultra shocks (for 2 shocks)**
1942	Rod ends (16 long & 4 short)/ hollow ball connectors (18)/ ball screws (2)
2742X	Rod ends, short (6)/ hollow balls (6)
2667	**Shock caps, aluminum (Big Bore Shocks) (2)**
1664T	**Shock shafts, hardened steel, titanium nitride coated (long) (2)**
2656T	**Shock shafts, hardened steel, titanium nitride coated (xx-long) (2)**
1664	Shock shafts, steel, chrome finish (long) (2)
2656	Shock shafts, steel, chrome finish (xx-long) (2)
1765	Silicone diaphragms (4)
1666	Silicone shock oil (30 wt)
2668	**Spring retainers, upper & lower (2)/ spring pre-load spacers: 1mm (4)/ 1.5mm (2)/ 2mm (2)/ 4mm (2)/ 8mm (2) (Big Bore Shocks)**
5860	**Springs, front (white) (progressive rate) (2) (fits #5862 aluminum Big Bore shocks)**
5859	**Springs, rear (white) (progressive rate) (2) (fits #5862 aluminum Big Bore shocks)**

Shocks (Ultra Shocks)

3765A	Body, Ultra Shock(s) (long) (grey) (2)
3766A	Body, Ultra Shock(s) (XXL) (grey) (2)
2362	**Rebuild kit, Ultra shocks (for 2 shocks)**
1942	Rod ends (16 long & 4 short)/ hollow ball connectors (18)/ ball screws (2)
2742X	Rod ends, short (6)/ hollow balls (6)
3767	**Shock caps (2)/ shock bottoms (2)**
8361	Shock caps (black) (4) (assembled with hollow balls)
3767A	**Shock caps, aluminum (blue-anodized) (4) (fits all Ultra Shocks)**
3767G	**Shock caps, aluminum (green-anodized) (4) (fits all Ultra Shocks)**
3767P	**Shock caps, aluminum (pink-anodized) (4) (fits all Ultra Shocks)**
3767X	**Shock caps, aluminum (red-anodized) (4) (fits all Ultra Shocks)**
1664T	**Shock shafts, hardened steel, titanium nitride coated (long) (2)**
2656T	**Shock shafts, hardened steel, titanium nitride coated (xx-long) (2)**
1664	**Shock shafts, steel, chrome finish (long) (2)**
2656	Shock shafts, steel, chrome finish (xx-long) (2)
3642X	**Shoulder screws, Ultra Shocks (3x12 hex drive) (6)**
1765	Silicone diaphragms (4)
1666	Silicone shock oil (30 wt)
3769	Spring pre-load spacers: 1mm (4)/ 2mm (2)/ 4mm (2)/ 8mm (2)
3768	Spring retainers, upper & lower (2)/ piston head set (2-hole (2)/ 3-hole (2))
2458	**Springs, front (black) (2)**
2458P	**Springs, front (pink) (2)**
5857P	**Springs, front (pink) (progressive rate) (2)**
2458A	**Springs, front (white) (2)**
5857	Springs, front (white) (progressive rate) (2)
3757	**Springs, rear (black) (2)**
3757T	**Springs, rear (blue) (2)**
3757A	**Springs, rear (green) (2)**
3757P	**Springs, rear (pink) (2)**
5858P	**Springs, rear (pink) (progressive rate) (2)**

BFGoodrich® Tires Trademarks are used under license from Michelin Group Companies.

SLASH™ VXL (58076-4)

3757X **Springs, rear (white) (2)**
5858 Springs, rear (white) (progressive rate) (2)
4957 **Springs, red (for Ultra Shocks only) (2.5 rate) (f/r) (2)**
3760 **Ultra Shocks (black) (long) (complete w/ spring pre-load spacers & springs) (front) (2)**
3762 **Ultra Shocks (black) (xx-long) (complete w/ spring pre-load spacers & springs) (rear) (2)**
3760A Ultra Shocks (grey) (long) (complete w/ spring pre-load spacers & springs) (2)
3762A Ultra Shocks (grey) (xx-long) (complete w/ spring pre-load spacers & springs) (rear) (2)

Slipper Clutch Components

3793 Input shaft (slipper shaft) / spring pin
5552X Rebuild kit, slipper clutch (steel disc/ friction pads (3)/ spring (2)/ pin/ 4.0mm NL (1)/ 5.0mm NL (1))
2554 Screws, 3x6mm cap-head machine (hex drive) (6)
5556 Slipper pressure plate & hub (aluminum alloy)

Spur Gears & Pinion Gears

3790 Gear adapter, fixed
2416 **Gear, 16-T pinion (48-pitch) / set screw**
1918 **Gear, 18-T pinion (48-pitch) / set screw**
2419 **Gear, 19-T pinion (48-pitch) / set screw**
2423 Gear, 23-T pinion (48-pitch) / set screw
2426 **Gear, 26-T pinion (48-pitch)/set screw**
2431 **Gear, 31-T pinion (48-pitch) / set screw**
4725 **Gear, pinion (25-tooth) (48-pitch) / set screw**
4728 Gear, pinion (28-tooth) (48-pitch)/ set screw
4683 **Spur gear, 83-tooth (48-pitch) (for models with Torque-Control slipper clutch)**
4686 Spur gear, 86-tooth (48-pitch) (for models with Torque-Control slipper clutch)
4690 **Spur gear, 90-tooth (48-pitch) (for models with Torque-Control slipper clutch)**

Steering Components

2728 **Ball bearings (5x8x2.5mm) (2)**
2545 Bellcrank bushings (plastic) (5x8x2.5mm) (4)
3643X **Camber links, front (TUBES blue-anodized, 7075-T6 aluminum, stronger than titanium) (83mm) (2)/ rod ends (4)/ aluminum wrench (1) (#2579 3x15 BCS (4) required for installation)**
3643G **Camber links, front (TUBES green-anodized, 7075-T6 aluminum, stronger than titanium) (83mm) (2)/ rod ends (4)/ aluminum wrench (1) (#2579 3x15 BCS (4) required for installation)**
3643R **Camber links, front (TUBES red-anodized, 7075-T6 aluminum, stronger than titanium) (83mm) (2)/ rod ends (4)/ aluminum wrench (1) (#2579 3x15 BCS (4) required for installation)**
6846 Linkage, steering (3x20mm turnbuckle) (1)/ rod ends (2)/ hollow balls (2)
1985 PTFE-coated washers, 5x8x0.5mm (20) (use with ball bearings)
2742 Rod ends, long (6)/ hollow ball connectors (6)
5347 Rod ends, Revo® (large) with hollow balls (12)
3744 **Servo saver w/adapters**
3967 Shoulder screws 3x10 (6) (without threadlock)
3743 Steering bellcranks (l&r)/ draglink
3743A **Steering bellcranks, drag link (blue-anodized T6 aluminum)/ 5x8mm ball bearings (4) hardware (assembled) (requires #3744 servo saver w/adapters)**
3743G **Steering bellcranks, drag link (green-anodized 6061-T6 aluminum)/ 5x8mm ball bearings (4)/ hardware (assembled)**
3743P **Steering bellcranks, drag link (pink-anodized 6061-T6 aluminum)/ 5x8mm ball bearings (4)/ hardware (assembled)**
3743X **Steering bellcranks, drag link (red-anodized T6 aluminum)/ 5x8mm ball bearings (4) hardware (assembled) (requires #3744 servo saver w/adapters)**
6845X Steering bellcranks/ servo saver/ servo saver spring/ servo spring retainer/servo horn, steering
1935 Turnbuckles, 36mm (2)
3139A **Turnbuckles, aluminum (blue-anodized), toe links, 59mm (2) (assembled w/ rod ends & hollow balls) (requires 5mm aluminum wrench #5477)**
3139X **Turnbuckles, aluminum (red-anodized), toe links, 59mm (2) (assembled with rod ends & hollow balls) (requires 5mm aluminum wrench #5477)**
3745 Turnbuckles, toe link, 59mm (78mm center to center) (2) (assembled with rod ends and hollow balls)
2746 Washers, 3x6mm metal (12)

Suspension Linkage

3643X **Camber links, front (TUBES blue-anodized, 7075-T6 aluminum, stronger than titanium) (83mm) (2)/ rod ends (4)/ aluminum wrench (1) (#2579 3x15 BCS (4) required for installation)**
3643G **Camber links, front (TUBES green-anodized, 7075-T6 aluminum, stronger than titanium) (83mm) (2)/ rod ends (4)/ aluminum wrench (1) (#2579 3x15 BCS (4) required for installation)**
3643R **Camber links, front (TUBES red-anodized, 7075-T6 aluminum, stronger than titanium) (83mm) (2)/ rod ends (4)/ aluminum wrench (1) (#2579 3x15 BCS (4) required for installation)**
3644X **Camber links, rear (TUBES blue-anodized, 7075-T6 aluminum, stronger than titanium) (73mm) (2)/ rod ends (4)/ aluminum wrench (1) (#2579 3x15 BCS (4) required for installation)**
3644G **Camber links, rear (TUBES green-anodized 7075-T6 aluminum, stronger than titanium) (73mm) (2)/ rod ends (4)/ aluminum wrench (1) (#2579 3x15 BCS (4) required for installation)**
3644R **Camber links, rear (TUBES red-anodized, 7075-T6 aluminum, stronger than titanium) (73mm) (2)/ rod ends (4)/ aluminum wrench (1) (#2579 3x15 BCS (4) required for installation)**
5525 Rod ends (12)/ hollow balls (12)
5347 Rod ends, Revo® (large) with hollow balls (12)
3739 Screw pin set (Rustler®/ Bandit/ Stampede®)
5529 Shim set, 3x7x1mm (2), 3x6x0.5mm (4), 3x7x2mm (2)/ hollow balls, captured (4)
2640 Suspension pins, 44mm (2) w/ e-clips
3640 Suspension screw pin set, steel (hex drive) (requires part #2640 for a complete suspension pin set) (Bandit, Rustler®, Stampede®)
3737A **Turnbuckle, aluminum (blue-anodized), 39mm (1)(assembled w/rod ends)/hollow balls (2) (fits front & rear on Slash)**
3737 **Turnbuckle, aluminum (red-anodized), 39mm (1) (assembled w/rod ends)/hollow balls (2) (fits front & rear on Slash)**
3741A **Turnbuckles, aluminum (blue-anodized), camber links, front, 39mm (2), rear, 49mm (2) (assembled w/rod ends & hollow balls)/ wrench**
3139A **Turnbuckles, aluminum (blue-anodized), toe links, 59mm (2) (assembled w/ rod ends & hollow balls) (requires 5mm aluminum wrench #5477)**
3741X **Turnbuckles, aluminum (red-anodized), camber links, front, 39mm (2), rear, 49mm (2) (assembled w/ rod ends & hollow balls)/wrench**
3139X **Turnbuckles, aluminum (red-anodized), toe links, 59mm (2) (assembled with rod ends & hollow balls) (requires 5mm aluminum wrench #5477)**
3644 Turnbuckles, camber link, 39mm (69mm center to center) (assembled with rod ends and hollow balls) (1 left, 1 right) (fits front & rear on Slash)
3745 Turnbuckles, toe link, 59mm (78mm center to center) (2) (assembled with rod ends and hollow balls)

Team Traxxas Items

2514 **Decal sheet, racing sponsors**
6160X **DVD, Maxx® Power! Full Throttle Action (sleeve)**
9950 **Official Team Traxxas® racing decal set (flag logo/ 6-color)**
9909 **Traxxas® racing banner, red & black (3x7 feet)**

Tires & Wheels

5116 Ball bearings, blue rubber sealed (5x11x4mm) (2)
5854 **Hub retainer, 17mm hubs, M4 X 0.7 (4) (use with #5853X, #6856X, #6469)**
3647 Nuts, 4mm flanged nylon locking (steel, serrated) (8)
1747R **Nuts, aluminum, flanged, serrated (4mm) (blue-anodized) (4)**
1747G **Nuts, aluminum, flanged, serrated (4mm) (green-anodized) (4)**
1747P **Nuts, aluminum, flanged, serrated (4mm) (pink-anodized) (4)**
1985 PTFE-coated washers, 5x8x0.5mm (20) (use with ball bearings)
1647 Silicone grease
2754 Stub axle pins (4)
5864 Tire & wheel assy, glued (SCT black, orange beadlock wheels, SCT off-road racing tires, foam inserts) (2) (2WD front)
5885A **Tire & wheel assy, glued (SCT Split-Spoke, black, blue beadlock wheels, BFGoodrich® Mud-Terrain™ T/A® KM2 tires, inserts) (2) (2WD Front)**
5883A **Tire & wheel assy, glued (SCT Split-Spoke, black, blue beadlock wheels, BFGoodrich® Mud-Terrain™ T/A® KM2 tire, inserts) (2) (4WD f/r, 2WD rear)**
5880X **Tires & wheels, assembled, glued (SCT satin chrome, beadlock style wheels, Kumho tires, foam inserts) (2) (4WD front/rear, 2WD rear only)**
5880 **Tires & wheels, assembled, glued (SCT satin chrome, black beadlock style wheels, Kumho tires, foam inserts) (2) (4WD front/rear, 2WD rear only)**
5882 **Tires & wheels, assembled, glued (SCT Split-Spoke satin chrome, black beadlock style wheels, Kumho tires, foam inserts) (2) (2WD front)**
5887R **Tires & wheels, assembled, glued (S1 compound) (SCT chrome wheels, red beadlock style, dual profile (2.2" outer, 3.0" inner), SCT off-road racing tires, foam inserts) (2) (4WD f/r, 2WD rear) (TSM rated)**

BFGoodrich® Tires Trademarks are used under license from Michelin Group Companies.

5889R **Tires & wheels, assembled, glued (S1 compound) (SCT Split-Spoke black, satin chrome beadlock style wheel, dual profile (2.2" outer, 3.0" inner), SCT off-road racing tires, foam inserts) (2) (4WD f/r, 2WD rear) (TSM rated)**

6891R **Tires & wheels, assembled, glued (S1 compound) (SCT Split-Spoke chrome, red beadlock style wheels, dual profile (2.2" outer, 3.0" inner), SCT off-road racing tires, foam inserts) (2) (4WD f/r, 2WD rear) (TSM rated)**

6892R **Tires & wheels, assembled, glued (S1 compound) (SCT Split-Spoke satin chrome, black beadlock style wheels, dual profile (2.2" outer, 3.0" inner), SCT off-road racing tires, foam inserts) (2) (4WD f/r, 2WD rear) (TSM rated)**

5863R **Tires & wheels, assembled, glued (S1 compound) (SCT, black, orange beadlock wheels, dual profile (2.2" outer, 3.0" inner), SCT off-road racing tires, foam inserts) (2) (4WD f/r, 2WD rear) (TSM® rated)**

6873X **Tires & wheels, assembled, glued (S1 ultra-soft off-road racing compound) (SCT Split-Spoke satin chrome, black beadlock style wheels, BFG Mud-Terrain tires, foam inserts) (2) (4WD front/rear, 2WD rear only)**

5882R **Tires & wheels, assembled, glued (S1 ultra-soft off-road racing compound) (SCT Split-Spoke satin chrome, black beadlock style wheels, Kumho tires, foam inserts) (2) (2WD front)**

6874R **Tires & wheels, assembled, glued (S1 ultra-soft off-road racing compound) (SCT Split-Spoke satin chrome, black beadlock style wheels, Kumho tires, foam inserts) (2) (4WD front/rear, 2WD rear only)**

5877R **Tires & wheels, assembled, glued (S1 ultra-soft, off-road racing compound) (SCT Split-Spoke chrome, red beadlock style wheels, BFGoodrich® Mud-Terrain™ T/A® KM2 tires) (2) (2WD front)**

6873R **Tires & wheels, assembled, glued (S1 ultra-soft, off-road racing compound) (SCT Split-Spoke chrome, red beadlock style wheels, BFGoodrich® Mud-Terrain™ T/A® KM2 tires, foam inserts) (2) (4WD f/r, 2WD rear)**

5863 Tires & wheels, assembled, glued (SCT black, orange beadlock wheels, dual profile (2.2" outer, 3.0" inner), SCT off-road racing tire, foam inserts) (2) (4WD f/r, 2WD rear) (TSM® rated)

5888 **Tires & wheels, assembled, glued (SCT chrome wheels, red beadlock style, dual profile (2.2" outer, 3.0" inner), SCT off-road racing tires, foam inserts) (2) (2wd front)**

5887 **Tires & wheels, assembled, glued (SCT chrome wheels, red beadlock style, dual profile (2.2" outer, 3.0" inner), SCT off-road racing tires, foam inserts) (2) (4WD f/r, 2WD rear) (TSM rated)**

5869 **Tires & wheels, assembled, glued (SCT chrome, red beadlock style wheels, BFGoodrich® Mud-Terrain™ T/A® KM2 tires, foam inserts) (2) (2WD front)**

5867 **Tires & wheels, assembled, glued (SCT chrome, red beadlock style wheels, BFGoodrich® Mud-Terrain™ T/A® KM2 tires, foam inserts) (2)(4WD front/rear, 2WD rear only)**

5873R **Tires & wheels, assembled, glued (SCT satin chrome red beadlock wheels, ultra-soft S1 compound off-road racing tires, inserts) (2) (2WD rear, 4WD f/r)**

5881X **Tires & wheels, assembled, glued (SCT satin chrome, beadlock style wheels, Kumho tires, foam inserts) (2) (2WD front)**

5875 Tires & wheels, assembled, glued (SCT satin chrome, beadlock style wheels, SCT off-road racing tires, foam inserts) (2) (2WD front)

5873 Tires & wheels, assembled, glued (SCT satin chrome, beadlock style wheels, SCT off-road racing tires, foam inserts) (2) (4WD front/rear, 2WD rear only) (TSM rated)

5878 **Tires & wheels, assembled, glued (SCT satin chrome, black beadlock style wheels, BFGoodrich® Mud-Terrain™ T/A® KM2 tires, foam inserts) (2)(4WD front/rear, 2WD rear only)**

5881 **Tires & wheels, assembled, glued (SCT satin chrome, black beadlock style wheels, Kumho tires, foam inserts) (2) (2WD front)**

5875X **Tires & wheels, assembled, glued (SCT satin chrome, black beadlock style wheels, SCT off-road racing tires, foam inserts) (2) (2WD front)**

5873X Tires & wheels, assembled, glued (SCT satin chrome, black beadlock style wheels, SCT off-road racing tires, foam inserts) (2) (4WD front/rear, 2WD rear only)

5873A **Tires & wheels, assembled, glued (SCT satin chrome, red-beadlock style wheels, SCT off-road tires, foam inserts) (2) (4WD front/rear, 2WD rear only)**

5889 **Tires & wheels, assembled, glued (SCT Split-Spoke black, satin chrome beadlock style wheel, dual profile (2.2" outer, 3.0" inner), SCT off-road racing tires, foam inserts) (2) (4WD f/r, 2WD rear) (TSM rated)**

5890 **Tires & wheels, assembled, glued (SCT Split-Spoke black, satin chrome beadlock style wheels, dual profile (2.2" outer, 3.0" inner), SCT off-road racing tires, foam inserts) (2) (2WD front)**

6873A **Tires & wheels, assembled, glued (SCT Split-Spoke chrome, red beadlock style wheels, BFGoodrich® Mud-Terrain™ T/A® KM2 tires, foam inserts) (2) (4WD f/r, 2WD rear)**

6891 **Tires & wheels, assembled, glued (SCT Split-Spoke chrome, red beadlock style wheels, dual profile (2.2" outer, 3.0" inner), SCT off-road racing tires, foam inserts) (2) (4WD f/r, 2WD rear) (TSM rated)**

5891 **Tires & wheels, assembled, glued (SCT Split-Spoke satin chrome, beadlock style wheels, paddle tires, foam inserts) (2) (4WD front/rear, 2WD rear only) (TSM rated)**

6873 **Tires & wheels, assembled, glued (SCT Split-Spoke satin chrome, black beadlock style wheels, BFGoodrich® Mud-Terrain™ T/A® KM2 tires, foam inserts) (2) (4WD f/r, 2WD rear) (TSM® rated)**

6892 **Tires & wheels, assembled, glued (SCT Split-Spoke satin chrome, black beadlock style wheels, dual profile (2.2" outer, 3.0" inner), SCT off-road racing tires, foam inserts) (2) (4WD f/r, 2WD rear) (TSM rated)**

6874 **Tires & wheels, assembled, glued (SCT Split-Spoke satin chrome, black beadlock style wheels, Kumho tires, foam inserts) (2) (4WD front/rear, 2WD rear only)**

5885 **Tires & wheels, assembled, glued (SCT Split-Spoke, black, satin chrome beadlock wheels, BFGoodrich® Mud-Terrain™ T/A® KM2 tires, foam inserts) (2) (2WD Front)**

5883 **Tires & wheels, assembled, glued (SCT Split-Spoke, black, satin chrome beadlock wheels, BFGoodrich® Mud-Terrain™ T/A® KM2 tire, foam inserts) (2) (4WD f/r, 2WD rear)**

5877A **Tires & wheels, assembled, glued (SCT Split-Spoke, chrome red beadlock style wheels, BFGoodrich® Mud-Terrain™ T/A® KM2 tires, foam inserts) (2) (2WD front)**

5877 **Tires & wheels, assembled, glued (SCT Split-Spoke, satin chrome, black beadlock wheels, BFGoodrich® Mud-Terrain™ T/A® KM2 tires, foam inserts) (2) (2WD front)**

5865 **Tires & wheels, assembled, glued (SCT, chrome, green beadlock wheel, BFGoodrich® Mud-Terrain™ T/A® KM2 tire, foam inserts) (2) (2WD front only)**

6876 **Tires & wheels, assembled, glued (SCT, chrome, green beadlock wheel, BFGoodrich® Mud-Terrain™ T/A® KM2 tire, foam inserts) (2) (4WD front/rear, 2WD rear only)**

6871 **Tires, BFGoodrich® Mud-Terrain T/A® KM2 (dual profile 4.3x1.7-2.2/3.0") (2)/ foam inserts (2)**

6871R **Tires, BFGoodrich® Mud-Terrain T/A® KM2 , ultra-soft (S1 off-road racing compound) (dual profile 4.3x1.7- 2.2/3.0") (2)/ foam inserts (2)**

6870 **Tires, Kumho (dual profile 4.3x1.7- 2.2/3.0") (2)/ foam inserts (2)**

6870R **Tires, Kumho, ultra-soft (S1 off-road racing compound) (dual profile 4.3x1.7- 2.2/3.0") (2)/ foam inserts (2)**

5871 **Tires, off-road racing, SCT dual profile 4.3x1.7- 2.2/3.0" (2)/ foam inserts (2)**

5871R **Tires, ultra-soft, S1 compound for off-road racing, SCT dual profile 4.3x1.7- 2.2/3.0" (2)/ foam inserts (2)**

1654 Wheel hubs, hex (rear) (2)/ stub axle pins (2)

1654X **Wheel hubs, hex (blue-anodized, lightweight aluminum) (2)/ axle pins(4)**

3654 Wheel hubs, hex (tall offset, Rustler®/Stampede® front) (2)/ axle pins (2.5x10mm) (2)

5853X **Wheel hubs, splined, 17mm, short (2), long (2)/wheel nuts, splined, 17mm (4) (blue-anodized)/ hub retainer M4x0.7 (4)/axle pin (4)/wrench, 5mm**

5353 **Wheel nuts, splined, 17mm (blue-anodized) (4)**

5480X **Wheel wrench, splined, 17mm**

5870X Wheels, SCT black, orange beadlock style, dual profile (2.2" outer, 3.0" inner) (2WD front) (2)

5868X Wheels, SCT black, orange beadlock style, dual profile (2.2" outer, 3.0" inner) (4WD f/r, 2WD rear) (2)

5870 **Wheels, SCT chrome, red beadlock style, dual profile (2.2" outer, 3.0" inner) (2WD front) (2)**

5868 **Wheels, SCT chrome, red beadlock style, dual profile (2.2" outer, 3.0" inner) (4WD front/rear, 2WD rear only) (2)**

5874 Wheels, SCT satin chrome, beadlock style, dual profile (2.2" outer, 3.0" inner) (2WD front)

5872 Wheels, SCT satin chrome, beadlock style, dual profile (2.2" outer, 3.0" inner) (4WD front/rear, 2WD rear only)

5872X **Wheels, SCT satin chrome, black beadlock style SCT, dual profile (2.2" outer, 3.0" inner) (4WD front/rear, 2WD rear only) (2)**

5874X **Wheels, SCT satin chrome, black beadlock style, dual profile (2.2" outer, 3.0" inner) (2WD front) (2)**

5874A Wheels, SCT satin chrome, red beadlock style, dual profile (2.2" outer, 3.0" inner) (2WD front) (2)

5872A Wheels, SCT satin chrome, red beadlock style, dual profile (2.2" outer, 3.0" inner) (4WD front/rear, 2WD rear only) (2)

5886A **Wheels, SCT Split-Spoke, black, blue beadlock style, dual profile (2.2" outer, 3.0" inner) (2WD front) (2)**

5884A **Wheels, SCT Split-Spoke, black, blue beadlock style, dual profile (2.2" outer, 3.0" inner) (4WD f/r, 2WD rear) (2)**

5886 Wheels, SCT Split-Spoke, black, satin chrome beadlock style, dual profile (2.2" outer, 3.0" inner) (2WD front) (2)

BFGoodrich® Tires Trademarks are used under license from Michelin Group Companies.

SLASH™ VXL (58076-4)

5884	Wheels, SCT Split-Spoke, black, satin chrome beadlock style, dual profile (2.2" outer, 3.0" inner) (4WD f/r, 2WD rear) (2)
6872X	**Wheels, SCT Split-Spoke, chrome, green beadlock style, dual profile (2.2" outer, 3.0" inner) (4WD front/rear, 2WD rear) (2)**
5876A	**Wheels, SCT Split-Spoke, chrome, red beadlock style, dual profile (2.2" outer, 3.0" inner) (2WD front) (2)**
6872A	**Wheels, SCT Split-Spoke, chrome, red beadlock style, dual profile (2.2" outer, 3.0" inner) (4WD front/rear, 2WD rear) (2)**
5876	**Wheels, SCT Split-Spoke, satin chrome, black beadlock style, dual profile (2.2" outer, 3.0" inner) (2WD front) (2)**
6872	**Wheels, SCT Split-Spoke, satin chrome, black beadlock style, dual profile (2.2" outer, 3.0" inner) (4WD front/rear, 2WD rear only) (2)**
5866	**Wheels, SCT, chrome, green beadlock style, dual profile (2.2" outer, 3.0" inner) (2) (2WD front only)**
6875	**Wheels, SCT, chrome, green beadlock style, dual profile (2.2" outer, 3.0" inner) (2) (4WD front/rear, 2WD rear only)**

Transmission Components

1552	**Motor screws (3x8mm hex cap) (6)/washers (6)/ wrench**
4607	**Ball bearings (5x11x4mm) (8)**
5116	Ball bearings, blue rubber sealed (5x11x4mm) (2)
3792	Cover, gear/ rubber gear cover plug/ 3x6 RM (2)
3790	Gear adapter, fixed
3691	**Gearbox halves (l&r) (black) w/ idler gear shaft**
3691A	Gearbox halves (l&r) (grey) w/ idler gear shaft
5148	Grease, white lithium
3696	Idler gear, steel (30-tooth)
3793	Input shaft (slipper shaft) / spring pin
2381X	Main diff with steel ring gear/ side cover plate/ screws (Bandit, Stampede®, Rustler®)
2382	Planet gears (4)/ planet shafts (4)/ sun gears (2)/sun gear alignment shaft (1) all hardened steel
2388X	Planetary gear differential with steel ring gear (complete) (fits Bandit, Stampede®, Rustler®)
5552X	Rebuild kit, slipper clutch (steel disc/ friction pads (3)/ spring (2)/ pin/ 4.0mm NL (1)/ 5.0mm NL (1))
2554	Screws, 3x6mm cap-head machine (hex drive) (6)
3931	Screws, 3x8mm flat-head machine (hex drive) (6)
1647	Silicone grease
5556	Slipper pressure plate & hub (aluminum alloy)
3195	Top drive gear, steel (22-tooth)

Traxxas Tools

3433X	**Body reamer (aluminum handle)**
3433	**Body reamer (plastic handle)**
3436	**Cap, body reamer**
3432	**Scissors, curved tip**
3431	**Scissors, straight tip**
8712	**Speed Bit Essentials Set, hex and nut driver, 7-piece, includes premium handle (medium), travel pouch, hex drivers (straight: 1.5mm, 2.0mm, 2.5mm) and nut drivers (5.0mm, 5.5mm, 7.0mm, and 8.0mm), 1/4" drive**
8721	**Speed bit handle, medium (one piece)**
8720	**Speed bit handle, premium, large (rubber overmold)**
8722	**Speed bit handle, premium, medium (rubber overmold)**
8710	**Speed Bit Master Set, hex and nut driver, 13-piece, includes premium handle (medium), travel pouch, hex drivers (straight: 1.5mm, 2.0mm, 2.5mm, 3.0mm), (ball-end: 2.0mm, 2.5mm, 3.0mm), and nut drivers (4.00mm, 4.50mm, 5.00mm, 5.50mm, 7.00mm, 8.00mm),**
8711	**Speed Bit Master Set, hex driver, 7-piece straight and ball end, includes premium handle (medium), travel pouch, hex drivers (straight: 1.5mm, 2.0mm, 2.5mm, 3.0mm) (ball end: 2.0mm, 2.5mm, 3.0mm), 1/4" drive**
8719	**Speed Bit Master Set, nut driver, 6-piece, includes premium handle (medium), travel pouch, and nut drivers (4.0mm, 4.5mm, 5.0mm, 5.5mm, 7.0mm, 8.0mm), 1/4" drive**
8716	**Speed Bit Set, hex driver, 2-piece ball-end (2.0mm, 2.5mm), 1/4" drive**
8716X	**Speed Bit Set, hex driver, 3-piece ball-end (2.0mm, 2.5mm, 3.0mm), 1/4" drive**
8715	**Speed Bit Set, hex driver, 3-piece straight (1.5mm, 2.0mm, 2.5mm), 1/4" drive**
8715X	**Speed Bit Set, hex driver, 4-piece straight (1.5mm, 2.0mm, 2.5mm, 3.0mm), 1/4" drive**
3415	**Tool set with pouch (includes 1.5mm, 2.0mm, 2.5mm, 3.0mm, 3.5mm, 4mm drivers/ 4mm, 5mm, 5.5mm, 7mm and 8mm nut drivers/ 2mm, 4mm, and 5mm slotted screwdrivers/ #00 Phillips, #0 Phillips, and #1 Phillips screwdrivers/ 4mm and 8mm wrench/ driver handle**

Turnbuckles & Threaded Rods

3643X	**Camber links, front (TUBES blue-anodized, 7075-T6 aluminum, stronger than titanium) (83mm) (2)/ rod ends (4)/ aluminum wrench (1) (#2579 3x15 BCS (4) required for installation)**
3643G	**Camber links, front (TUBES green-anodized, 7075-T6 aluminum, stronger than titanium) (83mm) (2)/ rod ends (4)/ aluminum wrench (1) (#2579 3x15 BCS (4) required for installation)**
3643R	**Camber links, front (TUBES red-anodized, 7075-T6 aluminum, stronger than titanium) (83mm) (2)/ rod ends (4)/ aluminum wrench (1) (#2579 3x15 BCS (4) required for installation)**
3644X	**Camber links, rear (TUBES blue-anodized, 7075-T6 aluminum, stronger than titanium) (73mm) (2)/ rod ends (4)/ aluminum wrench (1) (#2579 3x15 BCS (4) required for installation)**
3644G	**Camber links, rear (TUBES green-anodized 7075-T6 aluminum, stronger than titanium) (73mm) (2)/ rod ends (4)/ aluminum wrench (1) (#2579 3x15 BCS (4) required for installation)**
3644R	**Camber links, rear (TUBES red-anodized, 7075-T6 aluminum, stronger than titanium) (73mm) (2)/ rod ends (4)/ aluminum wrench (1) (#2579 3x15 BCS (4) required for installation)**
5525	Rod ends (12)/ hollow balls (12)
5347	Rod ends, Revo® (large) with hollow balls (12)
3737A	**Turnbuckle, aluminum (blue-anodized), 39mm (1)(assembled w/rod ends)/hollow balls (2) (fits front & rear on Slash)**
3737	**Turnbuckle, aluminum (red-anodized), 39mm (1) (assembled w/rod ends)/hollow balls (2) (fits front & rear on Slash)**
3741A	**Turnbuckles, aluminum (blue-anodized), camber links, front, 39mm (2), rear, 49mm (2) (assembled w/rod ends & hollow balls)/ wrench**
3139A	**Turnbuckles, aluminum (blue-anodized), toe links, 59mm (2) (assembled w/ rod ends & hollow balls) (requires 5mm aluminum wrench #5477)**
3741X	**Turnbuckles, aluminum (red-anodized), camber links, front, 39mm (2), rear, 49mm (2) (assembled w/ rod ends & hollow balls)/wrench**
3139X	**Turnbuckles, aluminum (red-anodized), toe links, 59mm (2) (assembled with rod ends & hollow balls) (requires 5mm aluminum wrench #5477)**
3644	Turnbuckles, camber link, 39mm (69mm center to center) (assembled with rod ends and hollow balls) (1 left, 1 right) (fits front & rear on Slash)
3745	Turnbuckles, toe link, 59mm (78mm center to center) (2) (assembled with rod ends and hollow balls)

If you have questions or need technical assistance, call Traxxas at:

1-888-TRAXXAS

(1-888-872-9927) (U.S. residents only)

For orders, calls outside the U.S., and other information, call 972-549-3000, or fax to 972-549-3011 e-mail Traxxas at support@Traxxas.com

TRAXXAS.com

RAPTOR

MODEL 58094-1

ELECTRIC POWERED
2WD REPLICA MODEL



HIGH-CAPACITY 3000 MAH
7-CELL BATTERY AND
4-AMP DC FAST CHARGER

WATERPROOF XL-5 ESC AND
TITAN 12T MOTOR

TQ 2.4GHz 2-CHANNEL
TRANSMITTER

Ford Official Licensed Product

All other copyrights or trademarks are the property of their respective owners and are being used under license.

Ford Motor Company Trademarks and Trade Dress used under license to Traxxas.

FORD STYLE AND PERFORMANCE IN ONE PACKAGE

Purpose-built by the Ford Specialty Vehicle Team for unprecedented all-terrain performance, the Ford Raptor is an off-road powerhouse that can go from the dealership to the desert as quickly as you can drive it off the lot. The Raptor's 6.2L V8 pumps out 411 horses to shred any terrain. Massive 35" tires grip the earth as the Raptor's competition-bred Fox Racing shocks absorb off-road abuse. Fast, powerful, and tough, the Ford Raptor is now available as a high-performance Ready-To-Race® model exclusively from Traxxas. Based on the award-winning Traxxas Slash, the Ford Raptor model features waterproof electronics for all-weather offroad adventure, rugged independent suspension with long-travel oil-filled shocks, and a powerful Titan 550 motor that delivers 30+mph top speeds. Rubber-sealed ball bearings, heavy-duty steel transmission gears, and high-strength materials assure your Raptor model is "Built Ford Tough" for exciting R/C performance run after run.

RAPTOR
Front Assembly

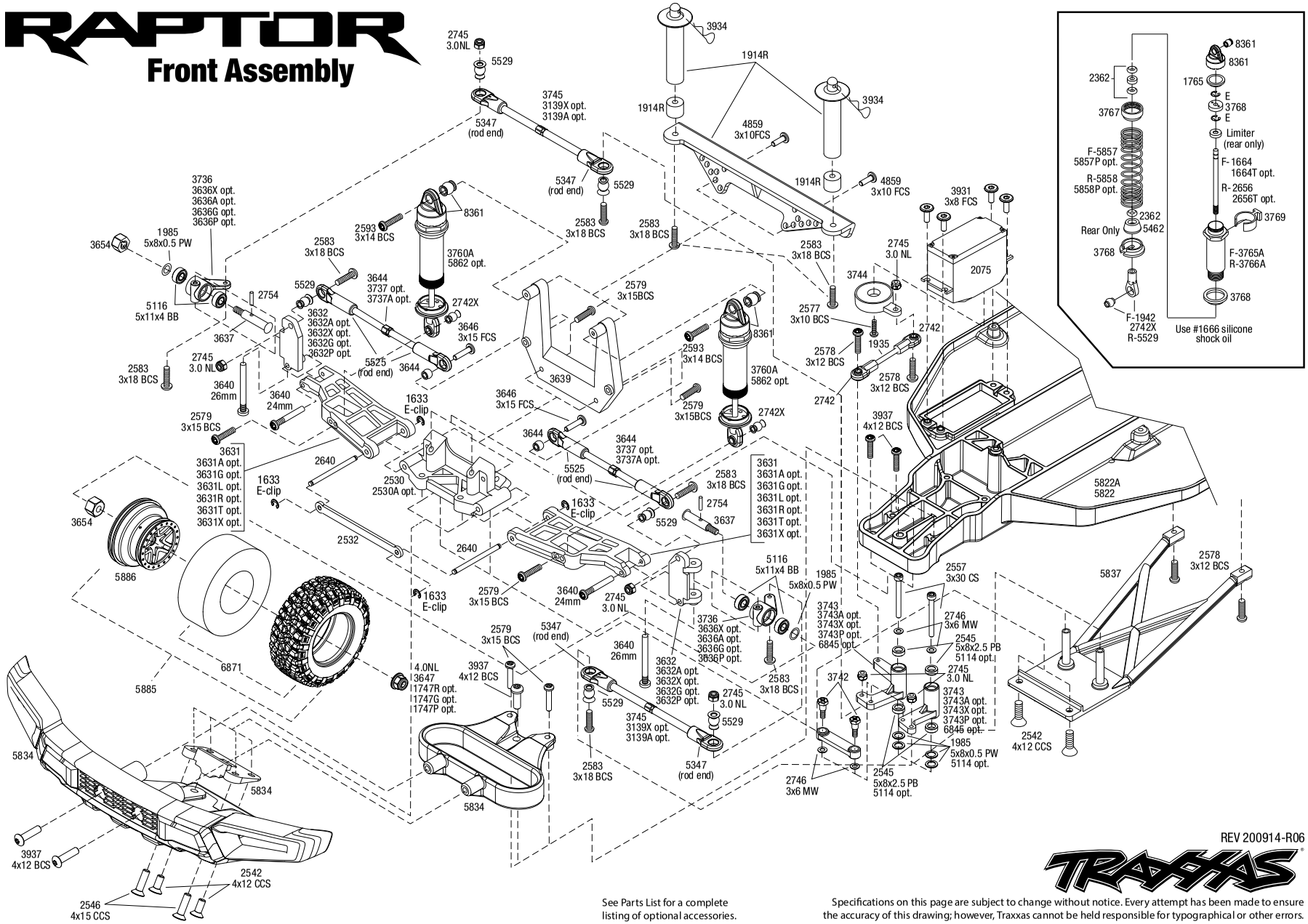

REV 200914-R06

TRAXXAS

See Parts List for a complete listing of optional accessories.

Specifications on this page are subject to change without notice. Every attempt has been made to ensure the accuracy of this drawing; however, Traxxas cannot be held responsible for typographical or other errors.

FORD RAPTOR (58094-1)

EXPLODED VIEWS

RAPTOR Chassis Assembly

Specifications on this page are subject to change without notice. Every attempt has been made to ensure the accuracy of this drawing; however, Traxxas cannot be held responsible for typographical or other errors.

REV 200914-R06

See Parts List for a complete listing of optional accessories.

Questions? **Call toll-free, 1-888-TRAXXAS**

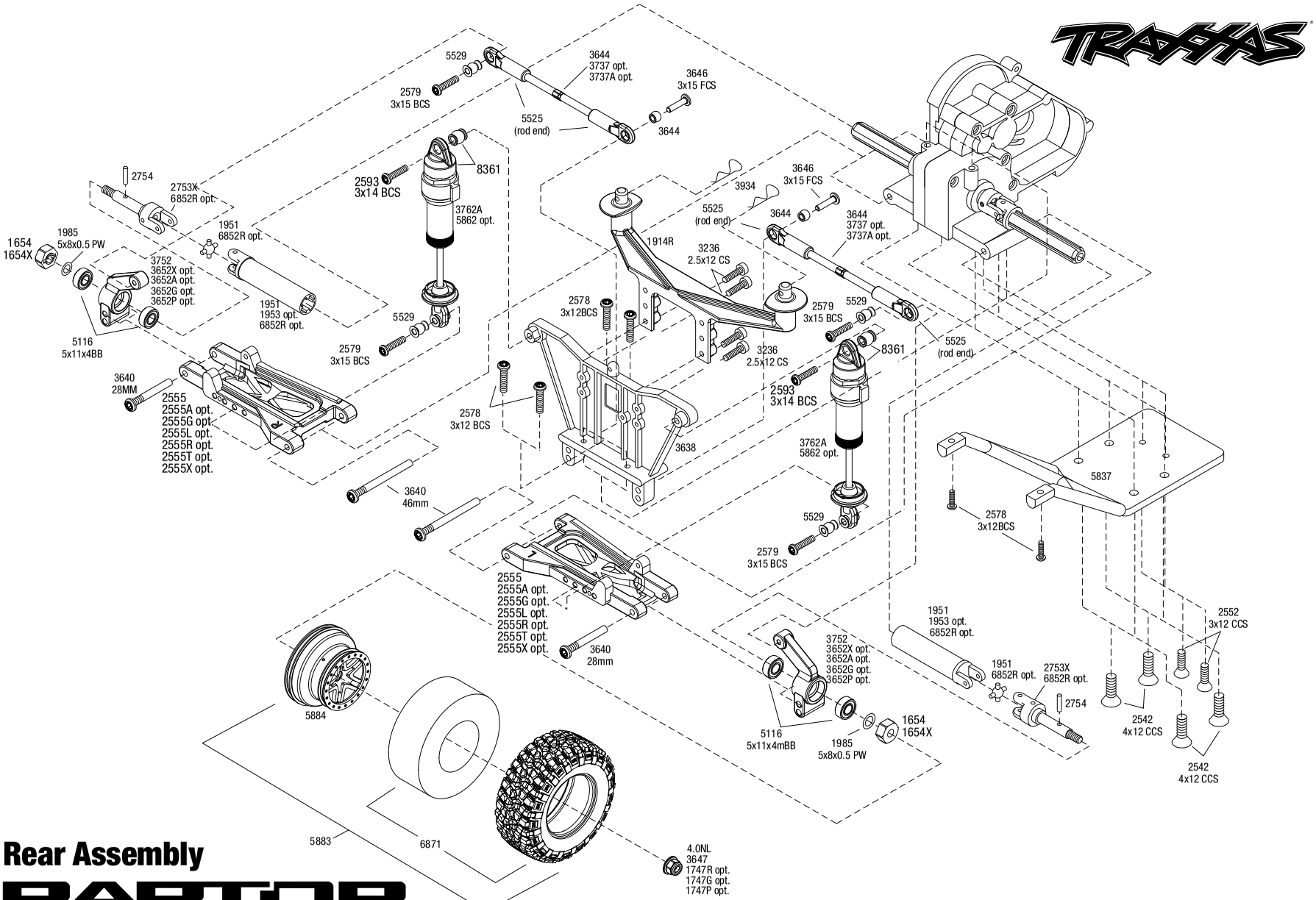

Rear Assembly

RAPTOR

See Parts List for a complete listing of optional accessories.

Specifications on this page are subject to change without notice. Every attempt has been made to ensure the accuracy of this drawing; however, Traxxas cannot be held responsible for typographical or other errors.

REV 200914-R06

RAPTOR
Transmission Assembly

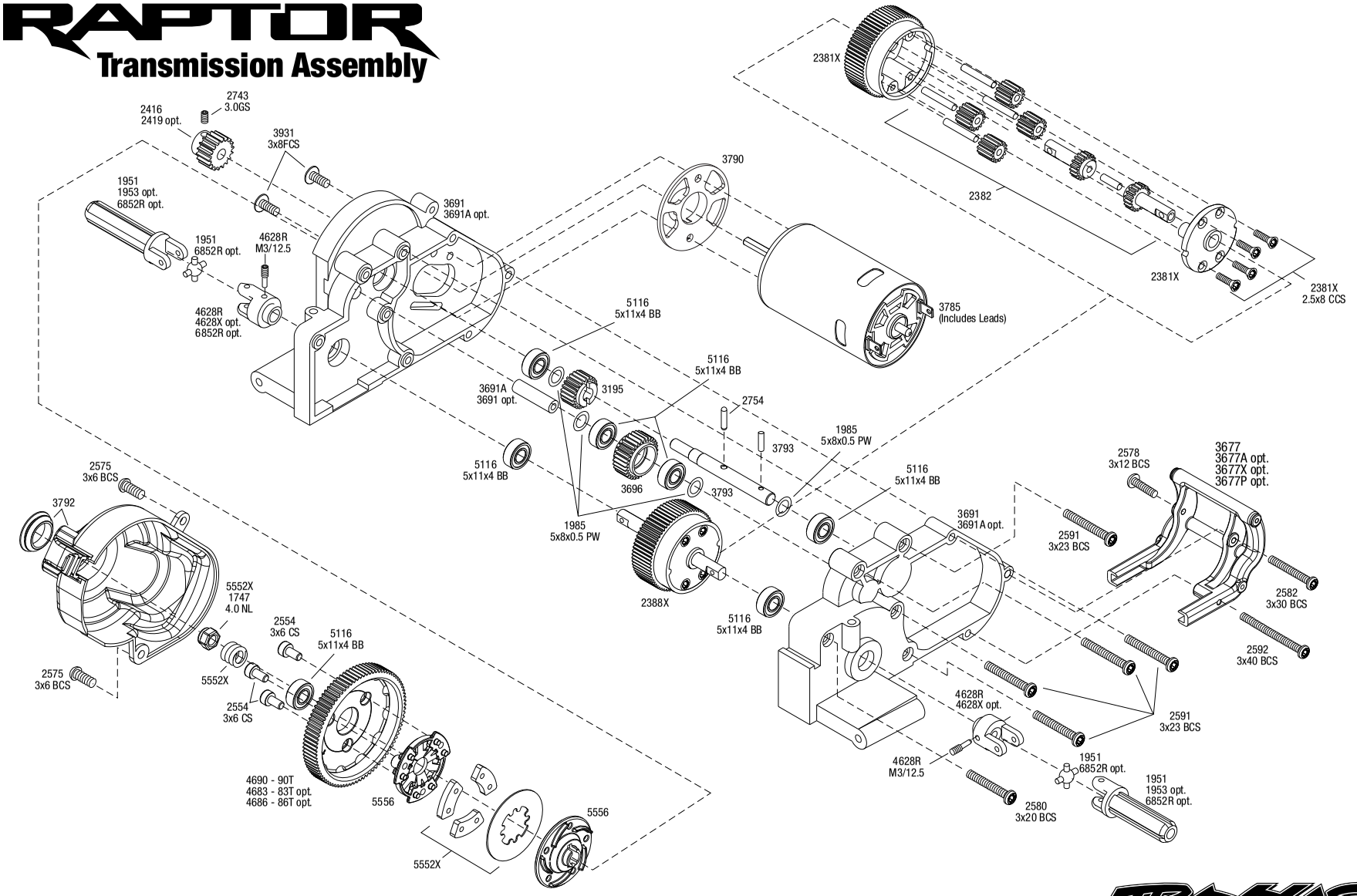

REV 200914-R06

See Parts List for a complete listing of optional accessories.

Specifications on this page are subject to change without notice. Every attempt has been made to ensure the accuracy of this drawing; however, Traxxas cannot be held responsible for typographical or other errors.

RAPTOR
Body Assembly

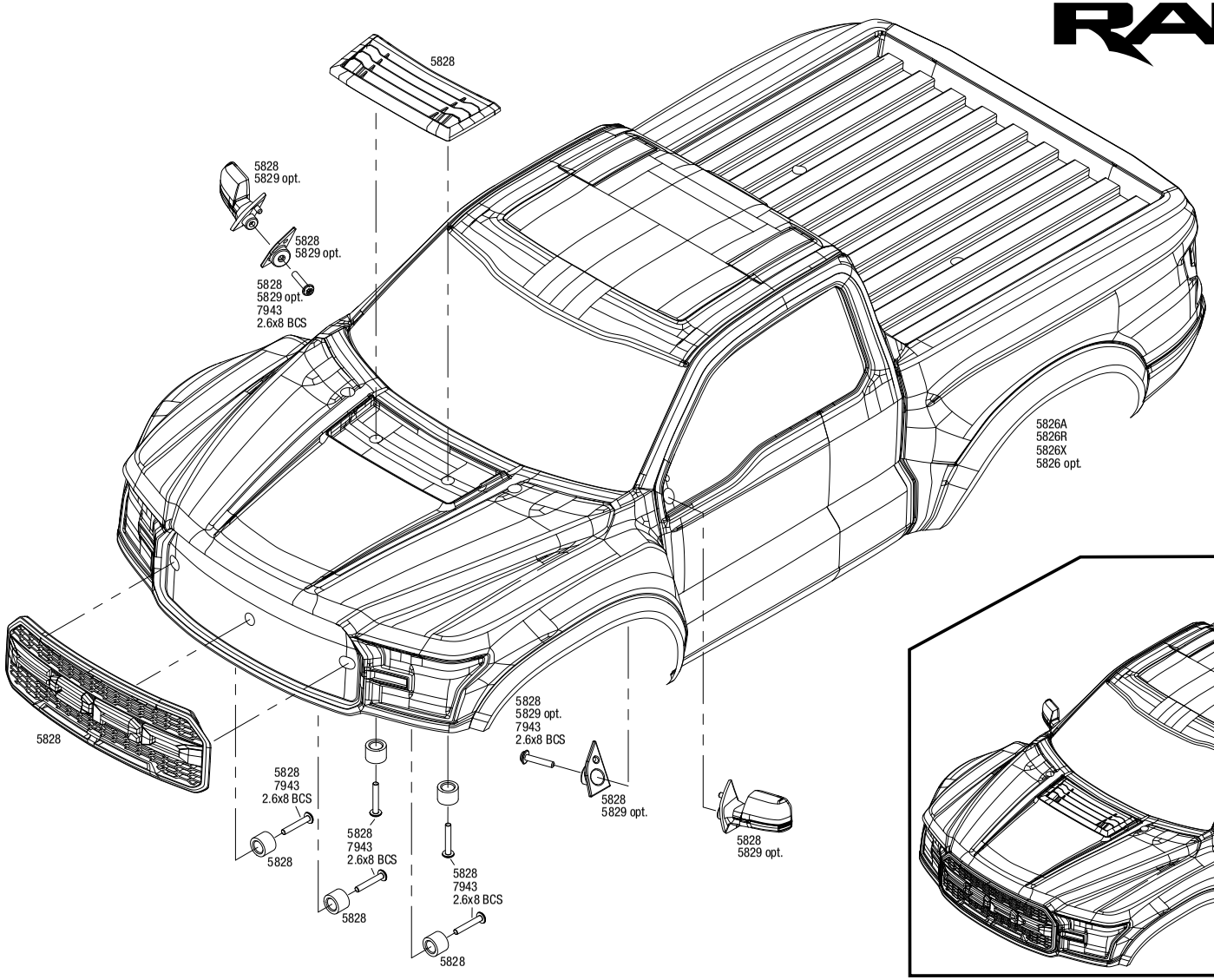

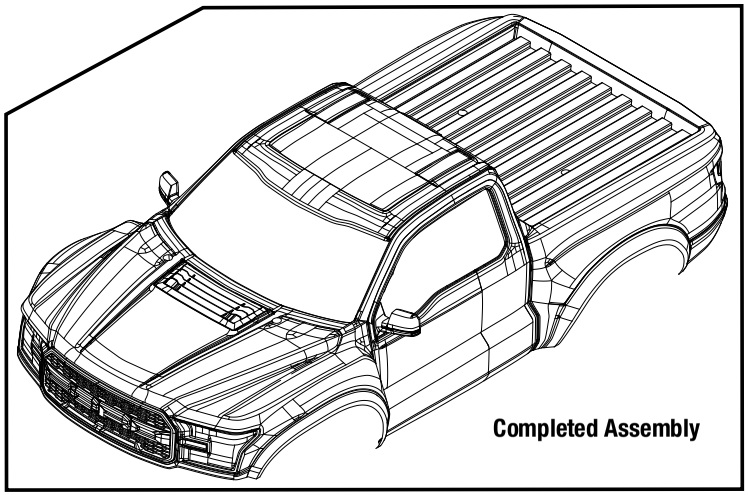
Completed Assembly

TRAXXAS

Specifications on this page are subject to change without notice. Every attempt has been made to ensure the accuracy of this drawing; however, Traxxas cannot be held responsible for typographical or other errors.

REV 200914-R06

See Parts List for a complete listing of optional accessories.

FORD RAPTOR (58094-1)

PARTS SHOWN IN BOLD ARE OPTIONAL ACCESSORIES.

Part categories and individual part listings are arranged alphabetically.

Bearings & Bushings

4607 **Ball bearings (5x11x4mm) (8)**
2728 **Ball bearings (5x8x2.5mm) (2)**
5116 Ball bearings, blue rubber sealed (5x11x4mm) (2)
5114 **Ball bearings, blue rubber sealed (5x8x2.5mm) (2)**
2545 Bellcrank bushings (plastic) (5x8x2.5mm) (4)
1675 **Bushings, self-lubricating (5x11x4mm) (14)**
1985 PTFE-coated washers, 5x8x0.5mm (20) (use with ball bearings)

Body & Accessories

1926 **Antenna caps, vinyl (2)/ antenna spool**
1726 Antenna, tube (1)/ vinyl antenna cap (1)/ wire retainer (1)
5828 Body accessories kit, 2017 Ford Raptor® (includes grille, hood insert, side mirrors, & mounting hardware)
3935 Body clip (mounting clip), angled, 90-degrees (10)
3935A **Body clip (mounting clip), angled, 90-degrees (black) (10)**
3934 Body clips, heavy duty (12)
1914R Body mount, front & rear (black)/ body posts, 52mm (2), 38mm (2), 25mm (2), 6.5mm (2)/ body post extensions (4)/ hardware
1815 Body washers (8)
6716 **Body washers, foam, 2mm (2)/ 3mm (2)/ 4mm (4)**
5826A **Body, Ford Raptor®, black (heavy duty)/ decals**
5826T **Body, Ford Raptor®, Fox (heavy duty)/ decals**
5826 **Body, Ford Raptor®, heavy duty (clear, requires painting)/ decals**
6811 **Body, Slash 4X4 (clear, requires painting)/ window masks/ decal sheet**
6811R **Body, Slash 4X4, heavy duty (clear, untrimmed, requires painting)/ window masks/ decal sheet**
6811X **Body, Slash 4X4, ProGraphix (Graphics are printed, requires paint & final color application)/ decal sheet**
6849 **Body, Slash 4X4/Slash, Fox Edition (painted, decals applied)**
2514 **Decal sheet, racing sponsors**
5829 Mirrors, side (left & right)/ mounts (left & right)/ 2.6x8mm BCS (2)
9950 **Official Team Traxxas® racing decal set (flag logo/ 6-color)**

Chassis & Attachments

5526 Antenna crimp nut, aluminum (blue-anodized)/ antenna nut tools
5526R **Antenna crimp nut, aluminum (red-anodized)/ antenna nut tools**
1914R Body mount, front & rear (black)/ body posts, 52mm (2), 38mm (2), 25mm (2), 6.5mm (2)/ body post extensions (4)/ hardware
5624 Box, receiver (sealed)/ foam pad/ silicone grease/ 3x8mm BCS (2)/ 2.5x8mm CS (2)/ 3x6mm BCS (2)
5834 Bumper, front/ bumper mount, front/ adapter (fits 2017 Ford Raptor)
5836 Bumper, rear/ bumper mount, rear (black)
5836P **Bumper, rear/ bumper mount, rear (pink)**
5830 **Chassis conversion kit, low CG (Slash)**
5832 **Chassis, low CG (black)**
5832A **Chassis, low CG (blue)**
5832G **Chassis, low CG (grey)**
5822 **Chassis, Slash**
5822A Chassis, Slash (black)
5827 Hold down, battery/ hold down retainer/ battery post/ foam spacer/ angled body clip
5827X **Hold down, battery/ hold down retainer/ battery post/ foam spacer/ angled body clip (allows for installation of taller, multi-cell batteries)**
5831 **Lower chassis, low CG (black)**
5831A **Lower chassis, low CG (blue)**
5831G **Lower chassis, low CG (grey)**
5823 Nerf bars, chassis (black)
5833 **Nerf bars, low CG (black)**
5833A **Nerf bars, low CG (blue)**
5833G **Nerf bars, low CG (grey)**
5625 Seal kit, receiver box (includes o-ring, seals, and silicone grease)
5837 Skidplates, front & rear (black)
5185 **Tires, rubber (2) (fits Traxxas® wheelie bar wheels)**
4974 **Wheelie bar arm (1)/ connector (1)/ 3x12 SS (hex drive) (4)**
3677A **Wheelie bar mount (1) / hardware (green)**
3677P **Wheelie bar mount (1) / hardware (pink)**
3677 Wheelie bar mount (1)/ hardware (black)
3677X **Wheelie bar mount (1)/ hardware (blue)**
3678 **Wheelie bar, assembled (black) (fits Slash, Bandit, Rustler®, Stampede® series)**
3678X **Wheelie bar, assembled (blue) (fits Slash, Bandit, Rustler®, Stampede® series)**
3678A **Wheelie bar, assembled (green) (fits Slash, Bandit, Rustler®, Stampede® series)**
3678P **Wheelie bar, assembled (pink) (fits Slash, Bandit, Rustler®, Stampede® series)**
4976 **Wheels (4)/ axles (2) (for T-Maxx®/E-Maxx wheelie bar)**
5186A **Wheels, aluminum (blue-anodized) (2)/ 5x8mm ball bearings (4)/ axles (2)/ rubber tires (2)**
5186 **Wheels, aluminum (red-anodized) (2)/ 5x8mm ball bearings (4)/ axles (2)/ rubber tires (2)**

Differential Components

2381X Main diff with steel ring gear/ side cover plate/ screws (Bandit, Stampede®, Rustler®)
2382 Planet gears (4)/ planet shafts (4)/ sun gears (2)/sun gear alignment shaft (1) all hardened steel
2388X Planetary gear differential with steel ring gear (complete) (fits Bandit, Stampede®, Rustler®)
5169 Screws, 2.6x8mm countersunk machine (6)
1647 Silicone grease

Driveline Components

5116 Ball bearings, blue rubber sealed (5x11x4mm) (2)
9059X **Cross pin (2)/ drive pin (2) (repairs 2 axle shafts)**
9057X **Differential output shafts, steel-splined constant-velocity (2)**
4628R Differential output yokes, black (2)/ 3x5mm countersunk screws (2)/ screw pin (2)
4628X **Differential output yokes, hardened steel (w/ U-joints) (2)**
6828X **Differential output yokes, heavy duty (2)/ screw pin (2)**
6852X **Driveshaft assembly, rear, heavy duty (1) (left or right) (fully assembled, ready to install)/ screw pin (1)**
6852R **Driveshafts, rear, steel-spline constant-velocity (complete assembly) (2)**
9052X **Driveshafts, rear, steel-spline constant-velocity (complete assembly) (2)**
1953 **Half shaft pro-pack (internal-splined (6)/ external-splined (6) (plastic shafts only)**
9055X **Half shaft, external splined (steel-spline constant velocity) (1)**
9056X **Half shaft, internal splined (steel-spline constant velocity) (1)**
6850X **Half shafts, heavy duty (external splined (2)/ internal splined (2))/ metal u-joints (4)**
1951 Half shafts, long truck (external-splined (2) & internal-splined (2)/ metal U-joints (4)
9058X **Rebuild kit, steel-splined constant-velocity driveshafts (includes pins, lube, and hardware for two axle shafts)**
3752 Stub axle carriers (2) (requires 5x11x4mm bearings)
3652A **Stub axle carriers, Rustler®/Stampede®/Bandit (2), 6061-T6 aluminum (blue-anodized)/ 5x11mm ball bearings (4)**
3652G **Stub axle carriers, Rustler®/Stampede®/Bandit (2), 6061-T6 aluminum (green-anodized)/ 5x11mm ball bearings (4)**
3652P **Stub axle carriers, Rustler®/Stampede®/Bandit (2), 6061-T6 aluminum (pink-anodized)/ 5x11mm ball bearings (4)**
3652X **Stub axle carriers, Rustler®/Stampede®/Bandit (2), 6061-T6 aluminum (red-anodized)/ 5x11mm ball bearings (4)**
2754 Stub axle pins (4)
9053X **Stub axle, rear, steel-splined constant velocity (1)**
2753X Stub axles, rear (2)
6853X **Stub axles, rear, heavy duty (2)/pins (2)**

Front Suspension & Steering

3637 Axles (front) (2)
2728 **Ball bearings (5x8x2.5mm) (2)**
5116 Ball bearings, blue rubber sealed (5x11x4mm) (2)
2545 Bellcrank bushings (plastic) (5x8x2.5mm) (4)
2530 Bulkhead (front) (black)
2530A **Bulkhead (front) (grey)**
3632 Caster blocks (l&r) (30-degree)
3632A **Caster blocks, 30-degree, blue-anodized 6061-T6 aluminum (left & right)/ suspension screw pin (2)**
3632G **Caster blocks, 30-degree, green-anodized 6061-T6 aluminum (left & right)/ suspension screw pin (2)**
3632P **Caster blocks, 30-degree, pink-anodized 6061-T6 aluminum (left & right)/ suspension screw pin (2)**
3632X **Caster blocks, 30-degree, red-anodized 6061-T6 aluminum (left & right)/ suspension screw pin (2)**
5347 Rod ends, Revo® (large) with hollow balls (12)
3646 Screws, 3x15mm flat-head machine (hex drive) (6)
3744 Servo saver w/adapters
3639 Shock tower (front)
3743 Steering bellcranks (l&r)/ draglink

3743A	**Steering bellcranks, drag link (blue-anodized 6061-T6 aluminum)/ 5x8mm ball bearings (4)/ hardware (assembled)**
3743G	**Steering bellcranks, drag link (green-anodized 6061-T6 aluminum)/ 5x8mm ball bearings (4)/ hardware (assembled)**
3743P	**Steering bellcranks, drag link (pink-anodized 6061-T6 aluminum)/ 5x8mm ball bearings (4)/ hardware (assembled)**
3743X	**Steering bellcranks, drag link (red-anodized 6061-T6 aluminum)/ 5x8mm ball bearings (4)/ hardware (assembled)**
6845X	**Steering bellcranks/ servo saver/ servo saver spring/ servo spring retainer/servo horn, steering**
3736	Steering blocks, left & right (2) (requires 5x11x4mm bearings)
3636A	**Steering blocks, Rustler®/Stampede®/Bandit (2), 6061-T6 aluminum (blue-anodized)/ 5x11mm ball bearings (4)**
3636G	**Steering blocks, Rustler®/Stampede®/Bandit (2), 6061-T6 aluminum (green-anodized)/ 5x11mm ball bearings (4)**
3636P	**Steering blocks, Rustler®/Stampede®/Bandit (2), 6061-T6 aluminum (pink-anodized)/ 5x11mm ball bearings (4)**
3636X	**Steering blocks, Rustler®/Stampede®/Bandit (2), 6061-T6 aluminum (red-anodized)/ 5x11mm ball bearings (4)**
3631	Suspension arms (front) (2)
3631X	**Suspension arms, black, front, heavy duty (2)**
3631A	**Suspension arms, blue, front, heavy duty (2)**
3631G	**Suspension arms, green, front, heavy duty (2)**
3631T	**Suspension arms, orange, front, heavy duty (2)**
3631R	**Suspension arms, red, front, heavy duty (2)**
3631L	**Suspension arms, white, front, heavy duty (2)**
2640	Suspension pins, 44mm (2) w/ e-clips
3640	Suspension screw pin set, steel (hex drive) (requires part #2640 for a complete suspension pin set) (Bandit, Rustler®, Stampede®)
2532	Tie bar, fiberglass
1935	Turnbuckles, 36mm (2)
3139A	**Turnbuckles, aluminum (blue-anodized), toe links, 59mm (2) (assembled w/ rod ends & hollow balls) (requires 5mm aluminum wrench #5477)**
3139X	**Turnbuckles, aluminum (red-anodized), toe links, 59mm (2) (assembled with rod ends & hollow balls) (requires 5mm aluminum wrench #5477)**
3644	Turnbuckles, camber link, 39mm (69mm center to center) (assembled with rod ends and hollow balls) (1 left, 1 right) (fits front & rear on Slash)
3745	Turnbuckles, toe link, 59mm (78mm center to center) (2) (assembled with rod ends and hollow balls)

Hardware

1926	**Antenna caps, vinyl (2)/ antenna spool**
1726	Antenna, tube (1)/ vinyl antenna cap (1)/ wire retainer (1)
3935	Body clip (mounting clip), angled, 90-degrees (10)
3935A	**Body clip (mounting clip), angled, 90-degrees (black) (10)**
3934	Body clips, heavy duty (12)
1589	Double-sided adhesive tape (25mm x 25mm) (2)
1633	E-clips/ C-rings
2586	Screws, 3x15mm cap-head machine (hex drive) (6)
2745	Nuts, 3mm nylon locking (12)
3647	Nuts, 4mm flanged nylon locking (steel, serrated) (8)
1747	Nuts, 4mm nylon locking (10)
1747A	**Nuts, aluminum, flanged, serrated (4mm) (red-anodized) (4)**
1985	PTFE-coated washers, 5x8x0.5mm (20) (use with ball bearings)
5525	Rod ends (12)/ hollow balls (12)
5347	Rod ends, Revo® (large) with hollow balls (12)
2742X	Rod ends, short (6)/ hollow balls (6)
3215	Screws, 2.5x6mm cap-head machine (hex drive) (6)
3965	Screws, 2.5x8mm cap-head machine (6)
2577	Screws, 3x10mm button-head machine (hex drive) (6)
4859	Screws, 3x10mm flat-head machine (hex drive) (4)
2578	Screws, 3x12mm button-head machine (hex drive) (6)
2552	Screws, 3x12mm countersunk machine (6) (hex drive)
2579	Screws, 3x15mm button-head machine (hex drive) (6)
3646	Screws, 3x15mm flat-head machine (hex drive) (6)
2583	Screws, 3x18mm button-head machine (hex drive) (6)
2580	Screws, 3x20mm button-head machine (hex drive) (6)
2591	Screws, 3x23mm button-head machine (hex drive) (6)
2582	Screws, 3x30mm button-head machine (hex drive) (6)
2592	Screws, 3x40mm button-head machine (hex drive) (6)
2575	Screws, 3x6mm button-head machine (hex drive) (6)
3932	Screws, 3x6mm flat-head machine (hex drive) (6)
2576	Screws, 3x8mm button-head machine (hex drive) (6)
3931	Screws, 3x8mm flat-head machine (hex drive) (6)
3937	Screws, 4x12mm button-head machine (hex drive) (6)
2542	Screws, 4x12mm countersunk machine (hex drive) (6)
2546	Screws, 4x15mm countersunk machine (hex drive) (6)
2743	Set (grub) screws, 3mm hardened (12)
5529	Shim set, 3x7x1mm (2), 3x6x0.5mm (4), 3x7x2mm (2)/ hollow balls, captured (4)
3742	Shoulder screws, steering bellcranks (3x30mm cap-head machine) (2)/ draglink shoulder screws (chrome) (2)
3642X	**Shoulder screws, Ultra Shocks (3x12 hex drive) (6)**
2754	Stub axle pins (4)
2746	**Washers, 3x6mm metal (12)**

Motors & Electronics

1726	Antenna, tube (1)/ vinyl antenna cap (1)/ wire retainer (1)
2260	**BEC assembly (complete)**
3790	Gear adapter, fixed
2072A	Gear set (for 2070, 2075 servos)
2252	**Gear set, metal (for 2250, 2255 servos)**
3785	Motor, Titan® 12T (12-Turn, 550 size)
3351R	**Motor, Velineon® 3500, brushless (assembled with 12-gauge wire and gold-plated bullet connectors)**
3931	Screws, 3x8mm flat-head machine (hex drive) (6)
2254	**Servo case, aluminum (blue-anodized) (middle) (for 2250 servo)**
2253	**Servo case, aluminum (red-anodized) (middle) (for 2255 servo)**
2251	**Servo case, plastic (top, middle, bottom)/ gaskets/ hardware (for 2250, 2255 servos)**
2074	Servo case/gaskets (for 2056 and 2075 waterproof servos)
2075R	**Servo, digital high-speed, metal gear (ball bearing), waterproof**
2075	Servo, digital high-torque (ball bearing), waterproof
2250	**Servo, digital high-torque 330 coreless, metal gear (ball bearing), waterproof**
2255	**Servo, digital high-torque 400 brushless, metal gear (ball bearing), waterproof**
2075X	**Servo, digital high-torque, metal gear (ball bearing), waterproof**
3350R	**Velineon® VXL-3s Brushless Power System, waterproof (includes VXL-3s waterproof ESC, Velineon 3500 motor, and speed control mounting plate (part #3725R))**
3355R	**Velineon® VXL-3s Electronic Speed Control, waterproof (brushless) (fwd/rev/brake)**
3018R	XL-5 Electronic Speed Control, waterproof (land version, low-voltage detection, fwd/rev/brake)

Radio System, Batteries & Chargers

2842X	**5000mAh 7.4v 2-Cell 25C LiPo Battery**
2843X	**5800mAh 7.4v 2-Cell 25C LiPo Battery**
2869X	**7600mAh 7.4v 2-Cell 25C LiPo Battery**
2976	**AC to DC converter, 40W**
2938X	**Adapter, Traxxas® iD® LiPo battery (adapts Traxxas iD batteries to separate balance ports)**
5526	Antenna crimp nut, aluminum (blue-anodized)/ antenna nut tools
5526R	**Antenna crimp nut, aluminum (red-anodized)/ antenna nut tools**
2943	**Battery charge indicators (green (4), blue (4), grey (4))**
6548	Battery door, transmitter (replacement for #6516, 6517, 6528, 6529, 6530 transmitters)
2914	**Battery, Power Cell AA Alkaline (4)**
2923X	Battery, Power Cell, 3000mAh (NiMH, 7-C flat, 8.4V)
2926X	**Battery, Power Cell, 3000mAh (NiMH, 7-C hump, 8.4V)**
2940X	**Battery, Series 3 Power Cell, 3300mAh (NiMH, 7-C flat, 8.4V)**
2941X	**Battery, Series 3 Power Cell, 3300mAh (NiMH, 7-C hump, 8.4V)**
2950X	**Battery, Series 4 Power Cell, 4200mAh (NiMH, 7-C flat, 8.4V)**
2951X	**Battery, Series 4 Power Cell, 4200mAh (NiMH, 7-C hump, 8.4V)**
2960X	**Battery, Series 5 Power Cell, 5000mAh (NiMH, 7-C flat, 8.4V)**
2961X	**Battery, Series 5 Power Cell, 5000mAh (NiMH, 7-C hump, 8.4V)**
2983	**Battery/charger completer pack (includes #2969 2-amp NiMH peak detecting AC charger (1), #2923X 3000mAh 8.4V 7-cell NiMH battery (1))**
2992	**Battery/charger completer pack (includes #2970 iD® charger (1), #2843X 5800mAh 7.4V 2-cell 25C LiPo battery (1))**
2260	**BEC assembly (complete)**
2975	Charger, DC, 4 amp (6 - 7 cell, 7.2 - 8.4 volt, NiMH)
2972	**Charger, EZ-Peak® Dual, 100W, NiMH/LiPo with iD® Auto Battery Identification**
2973	**Charger, EZ-Peak® Live Dual, 200W, NiMH/LiPo with iD® Auto Battery Identification**
2971	**Charger, EZ-Peak® Live, 100W, NiMH/LiPo with iD® Auto Battery Identification**
2970	**Charger, EZ-Peak® Plus, 4 amp, NiMH/LiPo with iD® Auto Battery Identification**
6525	**Communication link, telemetry expander**
6541	**Connector, power tap (with cable) (long)/ wire tie**
2978	**Fuse, charger, 5A (2) (for #2974, 2975, 2977)**
2072A	Gear set (for 2070, 2075 servos)
2252	**Gear set, metal (for 2250, 2255 servos)**
2968X	**LiPo cell voltage checker/balancer (includes #2938X adapter for Traxxas® iD® batteries)**
2968	**LiPo cell voltage checker/balancer (requires #2938X adapter for Traxxas® iD® batteries)**

BFGoodrich® Tires Trademarks are used under license from Michelin Group Companies.

FORD RAPTOR (58094-1)

6554	**Mount, telemetry expander (fits Bandit, Rustler®, Slash 2WD)**
6535	**Mount, temperature sensor (electric motors)/ wire tie/ thermal pad**
6519	Receiver, micro, TQ 2.4GHz (3-channel)
6518	**Receiver, micro, TQi 2.4GHz with telemetry (5-channel)**
6552	**Seal kit, expander box (includes o-ring, seals, and silicone grease)**
6526	**Sensor, auto-detectable, temperature**
6527	**Sensor, auto-detectable, voltage**
6520	**Sensor, RPM (long)/ 3x4mm BCS (2)/ 3x4 GS (1)**
6521	**Sensor, temperature and voltage (long)**
2254	**Servo case, aluminum (blue-anodized) (middle) (for 2250 servo)**
2253	**Servo case, aluminum (red-anodized) (middle) (for 2255 servo)**
2251	**Servo case, plastic (top, middle, bottom)/ gaskets/ hardware (for 2250, 2255 servos)**
2074	Servo case/gaskets (for 2056 and 2075 waterproof servos)
2075R	**Servo, digital high-speed, metal gear (ball bearing), waterproof**
2075	Servo, digital high-torque (ball bearing), waterproof
2250	**Servo, digital high-torque 330 coreless, metal gear (ball bearing), waterproof**
2255	**Servo, digital high-torque 400 brushless, metal gear (ball bearing), waterproof**
2075X	**Servo, digital high-torque, metal gear (ball bearing), waterproof**
6553X	**Telemetry expander 2.0 and GPS module 2.0, TQi radio system**
6550X	**Telemetry expander 2.0, TQi radio system (for use only with #6551X GPS module)**
6551X	**Telemetry GPS module 2.0, TQi radio system (for use only with #6550X telemetry expander)**
6538	**Telemetry trigger magnet holders, spur gear/ magnet, 5x2mm (1)/ 3x8mm CCS (3)/ 3x10mm CCS (3)**
6540	**Telemetry trigger magnet, 5X2mm (1)**
6509R	**TQi 2.4 GHz High Output radio system, 2-channel, Traxxas Link™ enabled, TSM (2-ch transmitter, 5-ch micro receiver)**
6507R	**TQi 2.4 GHz High Output radio system, 4-channel with Traxxas Link™ Wireless Module, TSM (4-ch transmitter, 5-ch micro receiver)**
6516	Transmitter, TQ 2.4GHz, 2-channel (transmitter only)
6528	**Transmitter, TQi Traxxas Link™ enabled, 2.4GHz high output, 2-channel (transmitter only)**
6529	**Transmitter, TQi Traxxas Link™ enabled, 2.4GHz high output, 3-channel (transmitter only)**
6530	**Transmitter, TQi Traxxas Link™ enabled, 2.4GHz high output, 4-channel (transmitter only)**
6511	**Traxxas Link™ Wireless Module**
3355R	**Velineon® VXL-3s Electronic Speed Control, waterproof (brushless) (fwd/rev/brake)**
6537	**Wire retainers, gear cover/ 3x4mm BCS (2)**
3018R	XL-5 Electronic Speed Control, waterproof (land version, low-voltage detection, fwd/rev/brake)

Ready-To-Race Model

58094-1	Ford F-150 Raptor: 1/10-Scale Ford F-150 Raptor with TQ 2.4GHz radio system

Rear Suspension

5116	Ball bearings, blue rubber sealed (5x11x4mm) (2)
1951	Half shafts, long truck (external-splined (2) & internal-splined (2)/ metal U-joints (4)
3638	Shock tower (rear)
3752	Stub axle carriers (2) (requires 5x11x4mm bearings)
3652A	**Stub axle carriers, Rustler®/Stampede®/Bandit (2), 6061-T6 aluminum (blue-anodized)/ 5x11mm ball bearings (4)**
3652G	**Stub axle carriers, Rustler®/Stampede®/Bandit (2), 6061-T6 aluminum (green-anodized)/ 5x11mm ball bearings (4)**
3652P	**Stub axle carriers, Rustler®/Stampede®/Bandit (2), 6061-T6 aluminum (pink-anodized)/ 5x11mm ball bearings (4)**
3652X	**Stub axle carriers, Rustler®/Stampede®/Bandit (2), 6061-T6 aluminum (red-anodized)/ 5x11mm ball bearings (4)**
2753X	Stub axles, rear (2)
2555	Suspension arms, (rear) (2)
2555X	**Suspension arms, black, rear, heavy duty (2)**
2555A	**Suspension arms, blue, rear, heavy duty (2)**
2555G	**Suspension arms, green, rear, heavy duty (2)**
2555T	**Suspension arms, orange, rear, heavy duty (2)**
2555R	**Suspension arms, red, rear, heavy duty (2)**
2555L	**Suspension arms, white, rear, heavy duty (2)**
3640	Suspension screw pin set, steel (hex drive) (requires part #2640 for a complete suspension pin set) (Bandit, Rustler®, Stampede®)
3644	Turnbuckles, camber link, 39mm (69mm center to center) (assembled with rod ends and hollow balls) (1 left, 1 right) (fits front & rear on Slash)

Shocks (Pro-level Aluminum)

2664	**Big Bore shock cylinder (long) (1)**
2666	**Big Bore shock cylinder (XX-long) (1)**
5862	**Big Bore shocks (hard-anodized & PTFE-coated T6 aluminum) (assembled with TiN shafts and springs) (front & rear) (4)**
2660	**Big Bore shocks (long) (hard-anodized & PTFE-coated T6 aluminum) (assembled with TiN shafts) w/o springs (front) (2)**
2662	**Big Bore shocks (XX-long) (hard-anodized & PTFE-coated T6 aluminum) (assembled with TiN shafts) w/o springs (rear) (2)**
2669	**Piston head set (2-hole (2)/ 3-hole (2))/ shock mounting bushings & washers (2) (Big Bore Shocks)**
2362	**Rebuild kit, Ultra shocks (for 2 shocks)**
1942	Rod ends (16 long & 4 short)/ hollow ball connectors (18)/ ball screws (2)
2742X	Rod ends, short (6)/ hollow balls (6)
2667	**Shock caps, aluminum (Big Bore Shocks) (2)**
1664T	**Shock shafts, hardened steel, titanium nitride coated (long) (2)**
2656T	**Shock shafts, hardened steel, titanium nitride coated (xx-long) (2)**
1664	Shock shafts, steel, chrome finish (long) (2)
2656	Shock shafts, steel, chrome finish (xx-long) (2)
1765	Silicone diaphragms (4)
1666	Silicone shock oil (30 wt)
2668	**Spring retainers, upper & lower (2)/ spring pre-load spacers: 1mm (4)/ 1.5mm (2)/ 2mm (2)/ 4mm (2)/ 8mm (2) (Big Bore Shocks)**
5860	**Springs, front (white) (progressive rate) (2) (fits #5862 aluminum Big Bore shocks)**
5859	**Springs, rear (white) (progressive rate) (2) (fits #5862 aluminum Big Bore shocks)**

Shocks (Ultra Shocks)

3765A	Body, Ultra Shock(s) (long) (grey) (2)
3766A	Body, Ultra Shock(s) (XXL) (grey) (2)
2362	**Rebuild kit, Ultra shocks (for 2 shocks)**
1942	Rod ends (16 long & 4 short)/ hollow ball connectors (18)/ ball screws (2)
2742X	Rod ends, short (6)/ hollow balls (6)
3767	**Shock caps (2)/ shock bottoms (2)**
8361	Shock caps (black) (4) (assembled with hollow balls)
3767A	**Shock caps, aluminum (blue-anodized) (4) (fits all Ultra Shocks)**
3767G	**Shock caps, aluminum (green-anodized) (4) (fits all Ultra Shocks)**
3767P	**Shock caps, aluminum (pink-anodized) (4) (fits all Ultra Shocks)**
3767X	**Shock caps, aluminum (red-anodized) (4) (fits all Ultra Shocks)**
1664T	**Shock shafts, hardened steel, titanium nitride coated (long) (2)**
2656T	**Shock shafts, hardened steel, titanium nitride coated (xx-long) (2)**
1664	**Shock shafts, steel, chrome finish (long) (2)**
2656	Shock shafts, steel, chrome finish (xx-long) (2)
3642X	**Shoulder screws, Ultra Shocks (3x12 hex drive) (6)**
1765	Silicone diaphragms (4)
1666	Silicone shock oil (30 wt)
3769	Spring pre-load spacers: 1mm (4)/ 2mm (2)/ 4mm (2)/ 8mm (2)
3768	Spring retainers, upper & lower (2)/ piston head set (2-hole (2)/ 3-hole (2))
2458	**Springs, front (black) (2)**
2458P	**Springs, front (pink) (2)**
5857P	**Springs, front (pink) (progressive rate) (2)**
2458A	**Springs, front (white) (2)**
5857	Springs, front (white) (progressive rate) (2)
3757	**Springs, rear (black) (2)**
3757T	**Springs, rear (blue) (2)**
3757A	**Springs, rear (green) (2)**
3757P	**Springs, rear (pink) (2)**
5858P	**Springs, rear (pink) (progressive rate) (2)**
3757X	**Springs, rear (white) (2)**
5858	Springs, rear (white) (progressive rate) (2)
4957	**Springs, red (for Ultra Shocks only) (2.5 rate) (f/r) (2)**
3760	**Ultra Shocks (black) (long) (complete w/ spring pre-load spacers & springs) (front) (2)**
3762	**Ultra Shocks (black) (xx-long) (complete w/ spring pre-load spacers & springs) (rear) (2)**
3760A	Ultra Shocks (grey) (long) (complete w/ spring pre-load spacers & springs) (2)
3762A	Ultra Shocks (grey) (xx-long) (complete w/ spring pre-load spacers & springs) (rear) (2)

BFGoodrich® Tires Trademarks are used under license from Michelin Group Companies.

Slipper Clutch Components

3793 Input shaft (slipper shaft) / spring pin
5552X Rebuild kit, slipper clutch (steel disc/ friction pads (3)/ spring (2)/ pin/ 4.0mm NL (1)/ 5.0mm NL (1))
2554 Screws, 3x6mm cap-head machine (hex drive) (6)
5556 Slipper pressure plate & hub (aluminum alloy)

Spur Gears & Pinion Gears

3790 Gear adapter, fixed
2416 Gear, 16-T pinion (48-pitch) / set screw
1918 Gear, 18-T pinion (48-pitch) / set screw
2419 Gear, 19-T pinion (48-pitch) / set screw
2423 Gear, 23-T pinion (48-pitch) / set screw
2426 Gear, 26-T pinion (48-pitch)/set screw
2431 Gear, 31-T pinion (48-pitch) / set screw
4725 Gear, pinion (25-tooth) (48-pitch) / set screw
4728 Gear, pinion (28-tooth) (48-pitch)/ set screw
4683 Spur gear, 83-tooth (48-pitch) (for models with Torque-Control slipper clutch)
4686 Spur gear, 86-tooth (48-pitch) (for models with Torque-Control slipper clutch)
4690 Spur gear, 90-tooth (48-pitch) (for models with Torque-Control slipper clutch)

Steering Components

2728 Ball bearings (5x8x2.5mm) (2)
2545 Bellcrank bushings (plastic) (5x8x2.5mm) (4)
1985 PTFE-coated washers, 5x8x0.5mm (20) (use with ball bearings)
2742 Rod ends, long (6)/ hollow ball connectors (6)
5347 Rod ends, Revo® (large) with hollow balls (12)
3744 Servo saver w/adapters
3742 Shoulder screws, steering bellcranks (3x30mm cap-head machine) (2)/ draglink shoulder screws (chrome) (2)
3743 Steering bellcranks (l&r)/ draglink
3743A Steering bellcranks, drag link (blue-anodized 6061-T6 aluminum)/ 5x8mm ball bearings (4)/ hardware (assembled)
3743G Steering bellcranks, drag link (green-anodized 6061-T6 aluminum)/ 5x8mm ball bearings (4)/ hardware (assembled)
3743P Steering bellcranks, drag link (pink-anodized 6061-T6 aluminum)/ 5x8mm ball bearings (4)/ hardware (assembled)
3743X Steering bellcranks, drag link (red-anodized 6061-T6 aluminum)/ 5x8mm ball bearings (4)/ hardware (assembled)
6845X Steering bellcranks/ servo saver/ servo saver spring/ servo spring retainer/servo horn, steering
1935 Turnbuckles, 36mm (2)
3139A Turnbuckles, aluminum (blue-anodized), toe links, 59mm (2) (assembled w/ rod ends & hollow balls) (requires 5mm aluminum wrench #5477)
3139X Turnbuckles, aluminum (red-anodized), toe links, 59mm (2) (assembled with rod ends & hollow balls) (requires 5mm aluminum wrench #5477)
3745 Turnbuckles, toe link, 59mm (78mm center to center) (2) (assembled with rod ends and hollow balls)
2746 Washers, 3x6mm metal (12)

Suspension Linkage

5525 Rod ends (12)/ hollow balls (12)
5347 Rod ends, Revo® (large) with hollow balls (12)
3739 Screw pin set (Rustler®/ Bandit/ Stampede®)
5529 Shim set, 3x7x1mm (2), 3x6x0.5mm (4), 3x7x2mm (2)/ hollow balls, captured (4)
2640 Suspension pins, 44mm (2) w/ e-clips
3640 Suspension screw pin set, steel (hex drive) (requires part #2640 for a complete suspension pin set) (Bandit, Rustler®, Stampede®)
3737A Turnbuckle, aluminum (blue-anodized), 39mm (1)(assembled w/rod ends)/hollow balls (2) (fits front & rear on Slash)
3737 Turnbuckle, aluminum (red-anodized), 39mm (1) (assembled w/rod ends)/hollow balls (2) (fits front & rear on Slash)
3741A Turnbuckles, aluminum (blue-anodized), camber links, front, 39mm (2), rear, 49mm (2) (assembled w/rod ends & hollow balls)/ wrench
3139A Turnbuckles, aluminum (blue-anodized), toe links, 59mm (2) (assembled w/ rod ends & hollow balls) (requires 5mm aluminum wrench #5477)
3741X Turnbuckles, aluminum (red-anodized), camber links, front, 39mm (2), rear, 49mm (2) (assembled w/ rod ends & hollow balls)/wrench
3139X Turnbuckles, aluminum (red-anodized), toe links, 59mm (2) (assembled with rod ends & hollow balls) (requires 5mm aluminum wrench #5477)
3644 Turnbuckles, camber link, 39mm (69mm center to center) (assembled with rod ends and hollow balls) (1 left, 1 right) (fits front & rear on Slash)
3745 Turnbuckles, toe link, 59mm (78mm center to center) (2) (assembled with rod ends and hollow balls)

Team Traxxas Items

2514 Decal sheet, racing sponsors
6160X DVD, Maxx® Power! Full Throttle Action (sleeve)
9950 Official Team Traxxas® racing decal set (flag logo/ 6-color)
9909 Traxxas® racing banner, red & black (3x7 feet)

Tires & Wheels

5116 Ball bearings, blue rubber sealed (5x11x4mm) (2)
5854 Hub retainer, 17mm hubs, M4 X 0.7 (4) (use with #5853X, #6856X, #6469)
3647 Nuts, 4mm flanged nylon locking (steel, serrated) (8)
1747R Nuts, aluminum, flanged, serrated (4mm) (blue-anodized) (4)
1747G Nuts, aluminum, flanged, serrated (4mm) (green-anodized) (4)
1747P Nuts, aluminum, flanged, serrated (4mm) (pink-anodized) (4)
1985 PTFE-coated washers, 5x8x0.5mm (20) (use with ball bearings)
1647 Silicone grease
2754 Stub axle pins (4)
5864 Tire & wheel assy, glued (SCT black, orange beadlock wheels, SCT off-road racing tires, foam inserts) (2) (2WD front)
5885A Tire & wheel assy, glued (SCT Split-Spoke, black, blue beadlock wheels, BFGoodrich® Mud-Terrain™ T/A® KM2 tires, inserts) (2) (2WD Front)
5883A Tire & wheel assy, glued (SCT Split-Spoke, black, blue beadlock wheels, BFGoodrich® Mud-Terrain™ T/A® KM2 tire, inserts) (2) (4WD f/r, 2WD rear)
5880X Tires & wheels, assembled, glued (SCT satin chrome, beadlock style wheels, Kumho tires, foam inserts) (2) (4WD front/rear, 2WD rear only)
5880 Tires & wheels, assembled, glued (SCT satin chrome, black beadlock style wheels, Kumho tires, foam inserts) (2) (4WD front/rear, 2WD rear only)
5882 Tires & wheels, assembled, glued (SCT Split-Spoke satin chrome, black beadlock style wheels, Kumho tires, foam inserts) (2) (2WD front)
6873X Tires & wheels, assembled, glued (S1 ultra-soft off-road racing compound) (SCT Split-Spoke satin chrome, black beadlock style wheels, BFG Mud-Terrain tires, foam inserts) (2) (4WD front/rear, 2WD rear only)
5882R Tires & wheels, assembled, glued (S1 ultra-soft off-road racing compound) (SCT Split-Spoke satin chrome, black beadlock style wheels, Kumho tires, foam inserts) (2) (2WD front)
6874R Tires & wheels, assembled, glued (S1 ultra-soft off-road racing compound) (SCT Split-Spoke satin chrome, black beadlock style wheels, Kumho tires, foam inserts) (2) (4WD front/rear, 2WD rear only)
5877R Tires & wheels, assembled, glued (S1 ultra-soft, off-road racing compound) (SCT Split-Spoke chrome, red beadlock style wheels, BFGoodrich® Mud-Terrain™ T/A® KM2 tires) (2) (2WD front)
6873R Tires & wheels, assembled, glued (S1 ultra-soft, off-road racing compound) (SCT Split-Spoke chrome, red beadlock style wheels, BFGoodrich® Mud-Terrain™ T/A® KM2 tires, foam inserts) (2) (4WD f/r, 2WD rear)
5863 Tires & wheels, assembled, glued (SCT black, orange beadlock wheels, dual profile (2.2" outer, 3.0" inner), SCT off-road racing tire, foam inserts) (2) (4WD f/r, 2WD rear) (TSM® rated)
5869 Tires & wheels, assembled, glued (SCT chrome, red beadlock style wheels, BFGoodrich® Mud-Terrain™ T/A® KM2 tires, foam inserts) (2) (2WD front)
5867 Tires & wheels, assembled, glued (SCT chrome, red beadlock style wheels, BFGoodrich® Mud-Terrain™ T/A® KM2 tires, foam inserts) (2)(4WD front/rear, 2WD rear only)
5873R Tires & wheels, assembled, glued (SCT satin chrome red beadlock wheels, ultra-soft S1 compound off-road racing tires, inserts) (2) (2WD rear, 4WD f/r)
5881X Tires & wheels, assembled, glued (SCT satin chrome, beadlock style wheels, Kumho tires, foam inserts) (2) (2WD front)
5875 Tires & wheels, assembled, glued (SCT satin chrome, beadlock style wheels, SCT off-road racing tires, foam inserts) (2) (2WD front)
5873 Tires & wheels, assembled, glued (SCT satin chrome, beadlock style wheels, SCT off-road racing tires, foam inserts) (2) (4WD front/rear, 2WD rear only) (TSM rated)
5878 Tires & wheels, assembled, glued (SCT satin chrome, black beadlock style wheels, BFGoodrich® Mud-Terrain™ T/A® KM2 tires, foam inserts) (2)(4WD front/rear, 2WD rear only)
5881 Tires & wheels, assembled, glued (SCT satin chrome, black beadlock style wheels, Kumho tires, foam inserts) (2) (2WD front)
5875X Tires & wheels, assembled, glued (SCT satin chrome, black beadlock style wheels, SCT off-road racing tires, foam inserts) (2) (2WD front)

BFGoodrich® Tires Trademarks are used under license from Michelin Group Companies.

FORD RAPTOR (58094-1)

5873X	**Tires & wheels, assembled, glued (SCT satin chrome, black beadlock style wheels, SCT off-road racing tires, foam inserts) (2) (4WD front/rear, 2WD rear only)**
5873A	**Tires & wheels, assembled, glued (SCT satin chrome, red-beadlock style wheels, SCT off-road tires, foam inserts) (2) (4WD front/rear, 2WD rear only)**
6873A	**Tires & wheels, assembled, glued (SCT Split-Spoke chrome, red beadlock style wheels, BFGoodrich® Mud-Terrain™ T/A® KM2 tires, foam inserts) (2) (4WD f/r, 2WD rear)**
5891	**Tires & wheels, assembled, glued (SCT Split-Spoke satin chrome, beadlock style wheels, paddle tires, foam inserts) (2) (4WD front/rear, 2WD rear only) (TSM rated)**
6873	**Tires & wheels, assembled, glued (SCT Split-Spoke satin chrome, black beadlock style wheels, BFGoodrich® Mud-Terrain™ T/A® KM2 tires, foam inserts) (2) (4WD f/r, 2WD rear) (TSM® rated)**
6874	**Tires & wheels, assembled, glued (SCT Split-Spoke satin chrome, black beadlock style wheels, Kumho tires, foam inserts) (2) (4WD front/rear, 2WD rear only)**
5885	Tires & wheels, assembled, glued (SCT Split-Spoke, black, satin chrome beadlock wheels, BFGoodrich® Mud-Terrain™ T/A® KM2 tires, foam inserts) (2) (2WD Front)
5883	Tires & wheels, assembled, glued (SCT Split-Spoke, black, satin chrome beadlock wheels, BFGoodrich® Mud-Terrain™ T/A® KM2 tire, foam inserts) (2) (4WD f/r, 2WD rear)
5877A	**Tires & wheels, assembled, glued (SCT Split-Spoke, chrome red beadlock style wheels, BFGoodrich® Mud-Terrain™ T/A® KM2 tires, foam inserts) (2) (2WD front)**
5877	**Tires & wheels, assembled, glued (SCT Split-Spoke, satin chrome, black beadlock wheels, BFGoodrich® Mud-Terrain™ T/A® KM2 tires, foam inserts) (2) (2WD front)**
5865	**Tires & wheels, assembled, glued (SCT, chrome, green beadlock wheel, BFGoodrich® Mud-Terrain™ T/A® KM2 tire, foam inserts) (2) (2WD front only)**
6876	**Tires & wheels, assembled, glued (SCT, chrome, green beadlock wheel, BFGoodrich® Mud-Terrain™ T/A® KM2 tire, foam inserts) (2) (4WD front/rear, 2WD rear only)**
6871	Tires, BFGoodrich® Mud-Terrain T/A® KM2 (dual profile 4.3x1.7-2.2/3.0") (2)/ foam inserts (2)
6871R	**Tires, BFGoodrich® Mud-Terrain T/A® KM2 , ultra-soft (S1 off-road racing compound) (dual profile 4.3x1.7- 2.2/3.0") (2)/ foam inserts (2)**
6870	**Tires, Kumho (dual profile 4.3x1.7- 2.2/3.0") (2)/ foam inserts (2)**
6870R	**Tires, Kumho, ultra-soft (S1 off-road racing compound) (dual profile 4.3x1.7- 2.2/3.0") (2)/ foam inserts (2)**
5871	**Tires, off-road racing, SCT dual profile 4.3x1.7- 2.2/3.0" (2)/ foam inserts (2)**
5871R	**Tires, ultra-soft, S1 compound for off-road racing, SCT dual profile 4.3x1.7- 2.2/3.0" (2)/ foam inserts (2)**
1654	Wheel hubs, hex (rear) (2)/ stub axle pins (2)
3654	Wheel hubs, hex (tall offset, Rustler®/Stampede® front) (2)/ axle pins (2.5x10mm) (2)
5853X	**Wheel hubs, splined, 17mm, short (2), long (2)/wheel nuts, splined, 17mm (4) (blue-anodized)/ hub retainer M4x0.7 (4)/axle pin (4)/wrench, 5mm**
5353	**Wheel nuts, splined, 17mm (blue-anodized) (4)**
5480X	**Wheel wrench, splined, 17mm**
5870X	**Wheels, SCT black, orange beadlock style, dual profile (2.2" outer, 3.0" inner) (2WD front) (2)**
5868X	**Wheels, SCT black, orange beadlock style, dual profile (2.2" outer, 3.0" inner) (4WD f/r, 2WD rear) (2)**
5870	**Wheels, SCT chrome, red beadlock style, dual profile (2.2" outer, 3.0" inner) (2WD front) (2)**
5868	**Wheels, SCT chrome, red beadlock style, dual profile (2.2" outer, 3.0" inner) (4WD front/rear, 2WD rear only) (2)**
5874	**Wheels, SCT satin chrome, beadlock style, dual profile (2.2" outer, 3.0" inner) (2WD front)**
5872	**Wheels, SCT satin chrome, beadlock style, dual profile (2.2" outer, 3.0" inner) (4WD front/rear, 2WD rear only)**
5872X	**Wheels, SCT satin chrome, black beadlock style SCT, dual profile (2.2" outer, 3.0" inner) (4WD front/rear, 2WD rear only) (2)**
5874X	**Wheels, SCT satin chrome, black beadlock style, dual profile (2.2" outer, 3.0" inner) (2WD front) (2)**
5874A	**Wheels, SCT satin chrome, red beadlock style, dual profile (2.2" outer, 3.0" inner) (2WD front) (2)**
5872A	**Wheels, SCT satin chrome, red beadlock style, dual profile (2.2" outer, 3.0" inner) (4WD front/rear, 2WD rear only) (2)**
5886A	**Wheels, SCT Split-Spoke, black, blue beadlock style, dual profile (2.2" outer, 3.0" inner) (2WD front) (2)**
5884A	**Wheels, SCT Split-Spoke, black, blue beadlock style, dual profile (2.2" outer, 3.0" inner) (4WD f/r, 2WD rear) (2)**
5886	Wheels, SCT Split-Spoke, black, satin chrome beadlock style, dual profile (2.2" outer, 3.0" inner) (2WD front) (2)
5884	Wheels, SCT Split-Spoke, black, satin chrome beadlock style, dual profile (2.2" outer, 3.0" inner) (4WD f/r, 2WD rear) (2)
6872X	**Wheels, SCT Split-Spoke, chrome, green beadlock style, dual profile (2.2" outer, 3.0" inner) (4WD front/rear, 2WD rear) (2)**
5876A	**Wheels, SCT Split-Spoke, chrome, red beadlock style, dual profile (2.2" outer, 3.0" inner) (2WD front) (2)**
6872A	**Wheels, SCT Split-Spoke, chrome, red beadlock style, dual profile (2.2" outer, 3.0" inner) (4WD front/rear, 2WD rear) (2)**
5876	**Wheels, SCT Split-Spoke, satin chrome, black beadlock style, dual profile (2.2" outer, 3.0" inner) (2WD front) (2)**
6872	**Wheels, SCT Split-Spoke, satin chrome, black beadlock style, dual profile (2.2" outer, 3.0" inner) (4WD front/rear, 2WD rear only) (2)**
5866	**Wheels, SCT, chrome, green beadlock style, dual profile (2.2" outer, 3.0" inner) (2) (2WD front only)**
6875	**Wheels, SCT, chrome, green beadlock style, dual profile (2.2" outer, 3.0" inner) (2) (4WD front/rear, 2WD rear only)**

Transmission Components

1552	**Motor screws (3x8mm hex cap) (6)/washers (6)/ wrench**
4607	**Ball bearings (5x11x4mm) (8)**
5116	Ball bearings, blue rubber sealed (5x11x4mm) (2)
3792	Cover, gear/ rubber gear cover plug/ 3x6 RM (2)
3790	Gear adapter, fixed
3691	Gearbox halves (l&r) (black) w/ idler gear shaft
3691A	**Gearbox halves (l&r) (grey) w/ idler gear shaft**
5148	Grease, white lithium
3696	Idler gear, steel (30-tooth)
3793	Input shaft (slipper shaft) / spring pin
2381X	Main diff with steel ring gear/ side cover plate/ screws (Bandit, Stampede®, Rustler®)
2382	Planet gears (4)/ planet shafts (4)/ sun gears (2)/sun gear alignment shaft (1) all hardened steel
2388X	Planetary gear differential with steel ring gear (complete) (fits Bandit, Stampede®, Rustler®)
5552X	Rebuild kit, slipper clutch (steel disc/ friction pads (3)/ spring (2)/ pin/ 4.0mm NL (1)/ 5.0mm NL (1))
2554	Screws, 3x6mm cap-head machine (hex drive) (6)
3931	Screws, 3x8mm flat-head machine (hex drive) (6)
1647	Silicone grease
5556	Slipper pressure plate & hub (aluminum alloy)
3195	Top drive gear, steel (22-tooth)

Traxxas Tools

3433X	**Body reamer (aluminum handle)**
3433	**Body reamer (plastic handle)**
3436	**Cap, body reamer**
3432	**Scissors, curved tip**
3431	**Scissors, straight tip**
8712	**Speed Bit Essentials Set, hex and nut driver, 7-piece, includes premium handle (medium), travel pouch, hex drivers (straight: 1.5mm, 2.0mm, 2.5mm) and nut drivers (5.0mm, 5.5mm, 7.0mm, and 8.0mm), 1/4" drive**
8721	**Speed bit handle, medium (one piece)**
8720	**Speed bit handle, premium, large (rubber overmold)**
8722	**Speed bit handle, premium, medium (rubber overmold)**
8710	**Speed Bit Master Set, hex and nut driver, 13-piece, includes premium handle (medium), travel pouch, hex drivers (straight: 1.5mm, 2.0mm, 2.5mm, 3.0mm), (ball-end: 2.0mm, 2.5mm, 3.0mm), and nut drivers (4.00mm, 4.50mm, 5.00mm, 5.50mm, 7.00mm, 8.00mm),**
8711	**Speed Bit Master Set, hex driver, 7-piece straight and ball end, includes premium handle (medium), travel pouch, hex drivers (straight: 1.5mm, 2.0mm, 2.5mm, 3.0mm) (ball end: 2.0mm, 2.5mm, 3.0mm), 1/4" drive**
8719	**Speed Bit Master Set, nut driver, 6-piece, includes premium handle (medium), travel pouch, and nut drivers (4.0mm, 4.5mm, 5.0mm, 5.5mm, 7.0mm, 8.0mm), 1/4" drive**
8716	**Speed Bit Set, hex driver, 2-piece ball-end (2.0mm, 2.5mm), 1/4" drive**
8716X	**Speed Bit Set, hex driver, 3-piece ball-end (2.0mm, 2.5mm, 3.0mm), 1/4" drive**
8715	**Speed Bit Set, hex driver, 3-piece straight (1.5mm, 2.0mm, 2.5mm), 1/4" drive**
8715X	**Speed Bit Set, hex driver, 4-piece straight (1.5mm, 2.0mm, 2.5mm, 3.0mm), 1/4" drive**
3415	**Tool set with pouch (includes 1.5mm, 2.0mm, 2.5mm, 3.0mm, 3.5mm, 4mm drivers/ 4mm, 5mm, 5.5mm, 7mm and 8mm nut drivers/ 2mm, 4mm, and 5mm slotted screwdrivers/ #00 Phillips, #0 Phillips, and #1 Phillips screwdrivers/ 4mm and 8mm wrench/ driver handle**

BFGoodrich® Tires Trademarks are used under license from Michelin Group Companies.

Turnbuckles & Threaded Rods

5525	Rod ends (12)/ hollow balls (12)
5347	Rod ends, Revo® (large) with hollow balls (12)
3737A	**Turnbuckle, aluminum (blue-anodized), 39mm (1)(assembled w/rod ends)/hollow balls (2) (fits front & rear on Slash)**
3737	**Turnbuckle, aluminum (red-anodized), 39mm (1) (assembled w/rod ends)/hollow balls (2) (fits front & rear on Slash)**
3741A	**Turnbuckles, aluminum (blue-anodized), camber links, front, 39mm (2), rear, 49mm (2) (assembled w/rod ends & hollow balls)/ wrench**
3139A	**Turnbuckles, aluminum (blue-anodized), toe links, 59mm (2) (assembled w/ rod ends & hollow balls) (requires 5mm aluminum wrench #5477)**
3741X	**Turnbuckles, aluminum (red-anodized), camber links, front, 39mm (2), rear, 49mm (2) (assembled w/ rod ends & hollow balls)/wrench**
3139X	**Turnbuckles, aluminum (red-anodized), toe links, 59mm (2) (assembled with rod ends & hollow balls) (requires 5mm aluminum wrench #5477)**
3644	Turnbuckles, camber link, 39mm (69mm center to center) (assembled with rod ends and hollow balls) (1 left, 1 right) (fits front & rear on Slash)
3745	Turnbuckles, toe link, 59mm (78mm center to center) (2) (assembled with rod ends and hollow balls)

If you have questions or need technical assistance, call Traxxas at:

1-888-TRAXXAS

(1-888-872-9927) (U.S. residents only)

For orders, calls outside the U.S., and other information, call 972-549-3000, or fax to 972-549-3011 e-mail Traxxas at support@Traxxas.com

TRAXXAS.COM

BFGoodrich® Tires Trademarks are used under license from Michelin Group Companies.

REV. 201002 1235

Bandit · Bandit VXL · Stampede · Stampede VXL
Rustler · Rustler VXL · Bigfoot · Bigfoot #1

















POWER-PACKED FOR FUN!
READY-TO-RACE®

The best-selling Rustler,® Bandit,™ and Stampede® are proven favorites with a formula for rugged fun that nothing else can touch. Traxxas' exclusive waterproof electronics deliver all-season R/C excitement, even in rain and mud! They blow the doors off the competition with more power, smoother control, better grip, and performance that makes them the fastest Ready-To-Race® electric stadium truck, buggy, and monster truck in their class. Knock-out graphics and bold, stylish wheels provide head-turning good looks.

TRAXXAS®
The Fastest Name In Radio Control®

BANDIT

MODEL 24054-1/24054-4

ELECTRIC POWERED
SPORTS BUGGY



35+ mph

HIGH-CAPACITY 3000 MAH
7-CELL BATTERY AND
4-AMP DC FAST CHARGER

WATERPROOF XL-5 ESC AND
TITAN 12T MOTOR

TQ 2.4GHz TRANSMITTER

HOT-PERFORMING OFF-ROAD BUGGY!

The Traxxas Bandit is the ultimate Extreme Sports Buggy™ made for the driver who wants to go fast, have fun, and have the most performance with the least maintenance. We're not talking bare-bones beginner cars or stripped-down racers here. Bandit was designed on a computer and proven on the racetrack to give you all the performance you need to rip massive rooster tails, soar over giant jumps, and lay down the power for pure performance and excitement at every turn. Bandit is built Traxxas Tough and Ready-To-Race® to keep you off the workbench and deep in the fun zone. Bandit is upgradable with a full line of Traxxas hot rod parts and accessories to totally customize your ride. Put yourself behind the wheel and experience the speed and thrill of an Extreme Sports Buggy!

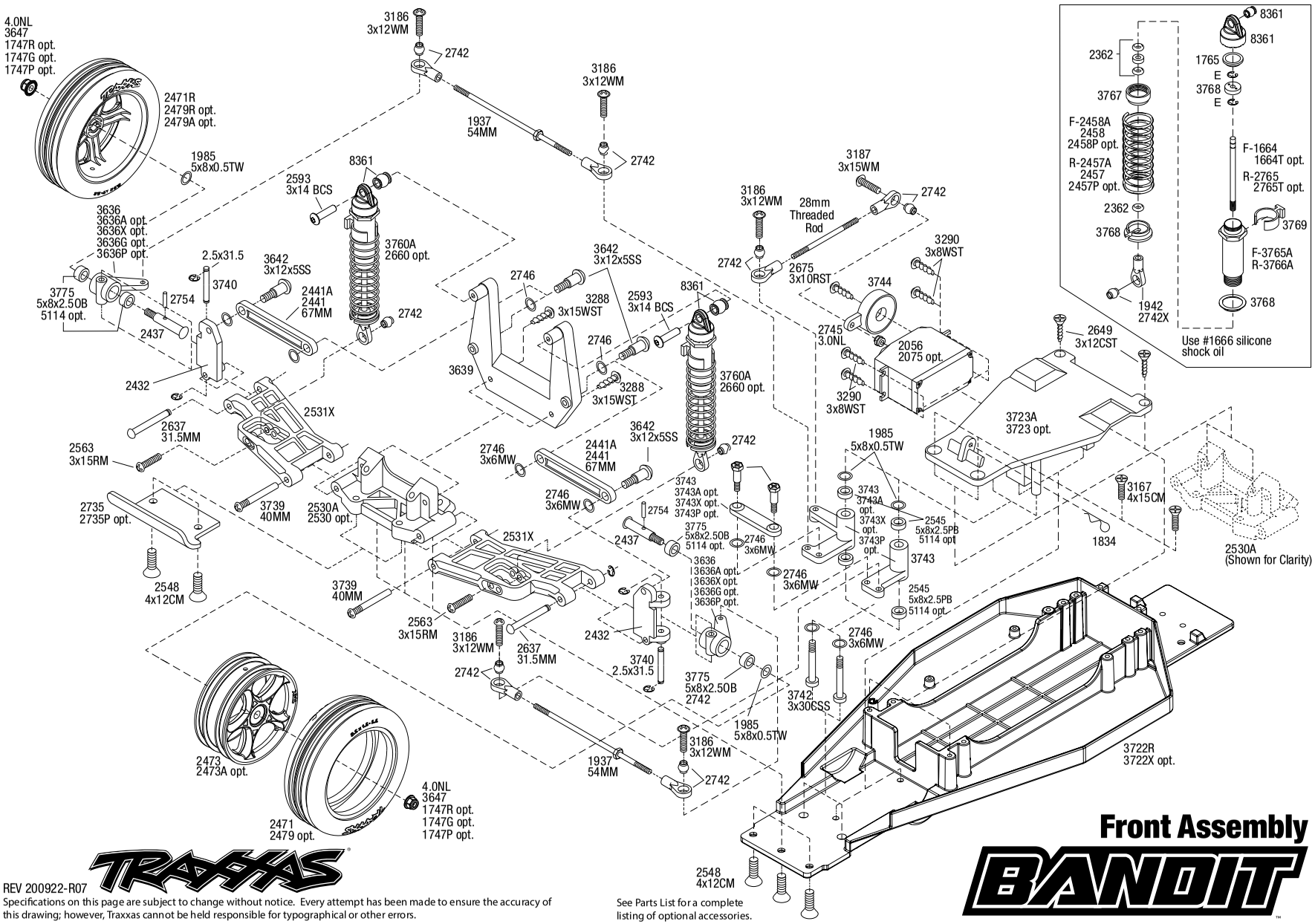

Front Assembly

BANDIT

REV 200922-R07

Specifications on this page are subject to change without notice. Every attempt has been made to ensure the accuracy of this drawing; however, Traxxas cannot be held responsible for typographical or other errors.

See Parts List for a complete listing of optional accessories.

BANDIT® (24054-1/24054-4)

EXPLODED VIEWS

BANDIT Chassis Assembly

REV 200922-R07

TRAXXAS

Specifications on this page are subject to change without notice. Every attempt has been made to ensure the accuracy of this drawing; however, Traxxas cannot be held responsible for typographical or other errors.

See Parts List for a complete listing of optional accessories.

Questions? **Call toll-free, 1-888-TRAXXAS**

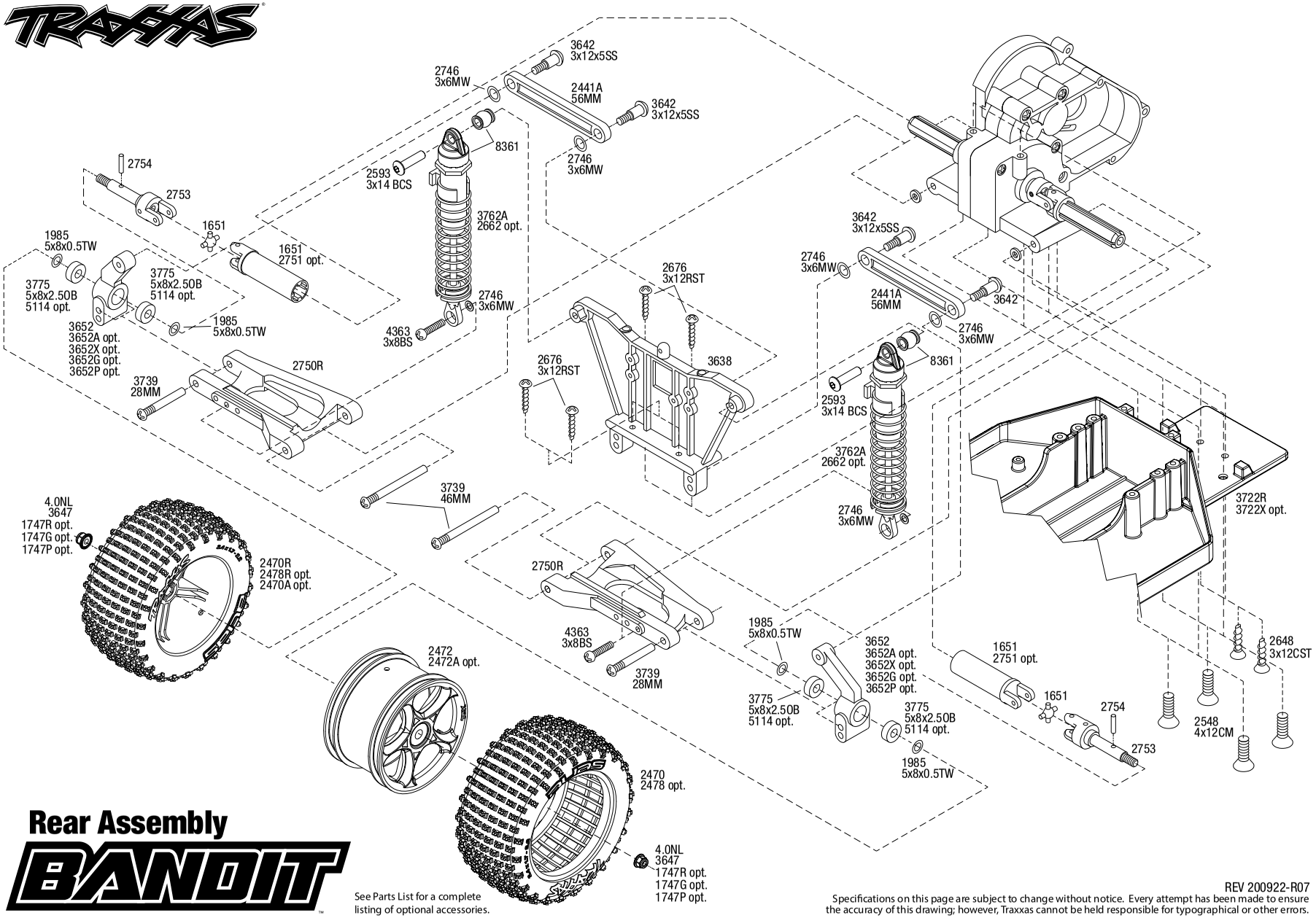

Rear Assembly

BANDIT™

See Parts List for a complete listing of optional accessories.

REV 200922-R07

Specifications on this page are subject to change without notice. Every attempt has been made to ensure the accuracy of this drawing; however, Traxxas cannot be held responsible for typographical or other errors.

BANDIT® (24054-1/24054-4)

EXPLODED VIEWS

BANDIT™ Transmission Assembly

REV 200922-R07

Specifications on this page are subject to change without notice. Every attempt has been made to ensure the accuracy of this drawing; however, Traxxas cannot be held responsible for typographical or other errors.

See Parts List for a complete listing of optional accessories.

Questions? **Call toll-free, 1-888-TRAXXAS**

PARTS SHOWN IN BOLD ARE OPTIONAL ACCESSORIES.

Part categories and individual part listings are arranged alphabetically.

Bearings & Bushings

4607 **Ball bearings (5x11x4mm) (8)**
4608 **Ball Bearings (5x11x4mm) (6)/ 5x8x2.5mm (8)**
2728 **Ball bearings (5x8x2.5mm) (2)**
4606 **Ball bearings (5x8x2.5mm) (8) (for wheels only)**
5116 Ball bearings, blue rubber sealed (5x11x4mm) (2)
5114 **Ball bearings, blue rubber sealed (5x8x2.5mm) (2)**
2545 Bellcrank bushings (plastic) (5x8x2.5mm) (4)
1675 Bushings, self-lubricating (5x11x4mm) (14)
3775 Bushings, self-lubricating (5x8x2.5mm) (12)
1985 PTFE-coated washers, 5x8x0.5mm (20) (use with ball bearings)

Body & Accessories

1926 **Antenna caps, vinyl (2)/ antenna spool**
1726 Antenna, tube (1)/ vinyl antenna cap (1)/ wire retainer (1)
1834 Body clips (12) (standard size)
1815 **Body washers (8)**
6716 **Body washers, foam, 2mm (2)/ 3mm (2)/ 4mm (4)**
2417 **Body, Bandit (front & rear) (clear, requires painting)/ window, lights, grille decal sheet**
2449 **Body, Bandit, Hawaiian graphics (painted, decals applied)**
2420 **Body, Bandit, ProGraphix® (replacement for the painted body. Graphics are printed, requires paint & final color application)/ decal sheet**
2448 **Body, Bandit, Rock n' Roll (painted, decals applied)**
2514 **Decal sheet, racing sponsors**
9950 **Official Team Traxxas® racing decal set (flag logo/ 6-color)**
3931 Screws, 3x8mm flat-head machine (hex drive) (6)
5185 Tires, rubber (2) (fits Traxxas® wheelie bar wheels)
4974 **Wheelie bar arm (1)/ connector (1)/ 3x12 SS (hex drive) (4)**
3677A **Wheelie bar mount (1) / hardware (green)**
3677P **Wheelie bar mount (1) / hardware (pink)**
3677 **Wheelie bar mount (1)/ hardware (black)**
3677X **Wheelie bar mount (1)/ hardware (blue)**
3678 **Wheelie bar, assembled (black) (fits Slash, Bandit, Rustler®, Stampede® series)**
3678X **Wheelie bar, assembled (blue) (fits Slash, Bandit, Rustler®, Stampede® series)**
3678A **Wheelie bar, assembled (green) (fits Slash, Bandit, Rustler®, Stampede® series)**
3678P **Wheelie bar, assembled (pink) (fits Slash, Bandit, Rustler®, Stampede® series)**
4976 **Wheels (4)/ axles (2) (for T-Maxx®/E-Maxx wheelie bar)**
5186A **Wheels, aluminum (blue-anodized) (2)/ 5x8mm ball bearings (4)/ axles (2)/ rubber tires (2)**
5186 **Wheels, aluminum (red-anodized) (2)/ 5x8mm ball bearings (4)/ axles (2)/ rubber tires (2)**
2615 Wing buttons (2)/ set screws (2)/ spacers (2)/ 3x8mm CS (2)
2414 Wing wire

Chassis & Attachments

3727 **Battery hold-down plate (black)/ metal posts (2)/body clips (2)**
3727A Battery hold-down plate (grey) / metal posts (2) / body clips (2)
3628 Box, receiver (sealed)/ foam pad/2.5x8mm CS (4)/ 3x10mm CS (2)
2735 Bumper (front)
2735P **Bumper (front) (pink)**
3722X **Lower chassis (black) (166mm long battery compartment) (fits both flat and hump style battery packs) (use only with #3725R ESC mounting plate)**
3722R Lower chassis (grey) (166mm long battery compartment) (fits both flat and hump style battery packs) (use only with #3725R ESC mounting plate)
3725R Mounting plate, electronic speed control (for installation of XL-5/VXL into Bandit or Rustler®)
3629 Seal kit, receiver box (includes o-ring, seals, and silicone grease)
5185 **Tires, rubber (2) (fits Traxxas® wheelie bar wheels)**
3723 **Upper chassis (black)**
3723A Upper chassis (grey)
4974 **Wheelie bar arm (1)/ connector (1)/ 3x12 SS (hex drive) (4)**
3677A **Wheelie bar mount (1) / hardware (green)**
3677P **Wheelie bar mount (1) / hardware (pink)**
3677 **Wheelie bar mount (1)/ hardware (black)**
3677X **Wheelie bar mount (1)/ hardware (blue)**
3678 **Wheelie bar, assembled (black) (fits Slash, Bandit, Rustler®, Stampede® series)**
3678X **Wheelie bar, assembled (blue) (fits Slash, Bandit, Rustler®, Stampede® series)**
3678A **Wheelie bar, assembled (green) (fits Slash, Bandit, Rustler®, Stampede® series)**
3678P **Wheelie bar, assembled (pink) (fits Slash, Bandit, Rustler®, Stampede® series)**
4976 **Wheels (4)/ axles (2) (for T-Maxx®/E-Maxx wheelie bar)**
5186A **Wheels, aluminum (blue-anodized) (2)/ 5x8mm ball bearings (4)/ axles (2)/ rubber tires (2)**
5186 **Wheels, aluminum (red-anodized) (2)/ 5x8mm ball bearings (4)/ axles (2)/ rubber tires (2)**

Differential Components

2381X Main diff with steel ring gear/ side cover plate/ screws (Bandit, Stampede®, Rustler®)
2382 Planet gears (4)/ planet shafts (4)/ sun gears (2)/sun gear alignment shaft (1) all hardened steel
2388X Planetary gear differential with steel ring gear (complete) (fits Bandit, Stampede®, Rustler®)
1647 Silicone grease

Driveline Components

4628R Differential output yokes, black (2)/ 3x5mm countersunk screws (2)/ screw pin (2)
4628X **Differential output yokes, hardened steel (w/ U-joints) (2)**
2751 **Half-shaft pro-pack (internal-splined (6)/external-splined (6)) (plastic shafts only)**
1651 Half-shafts (internal-splined (2)/external-splined (2))/ metal U-joints (4)
3652 Stub axle carriers (2)
3752 **Stub axle carriers (2) (requires 5x11x4mm bearings)**
3652A **Stub axle carriers, Rustler®/Stampede®/Bandit (2), 6061-T6 aluminum (blue-anodized)/ 5x11mm ball bearings (4)**
3652G **Stub axle carriers, Rustler®/Stampede®/Bandit (2), 6061-T6 aluminum (green-anodized)/ 5x11mm ball bearings (4)**
3652P **Stub axle carriers, Rustler®/Stampede®/Bandit (2), 6061-T6 aluminum (pink-anodized)/ 5x11mm ball bearings (4)**
3652P **Stub axle carriers, Rustler®/Stampede®/Bandit (2), 6061-T6 aluminum (pink-anodized)/ 5x11mm ball bearings (4)**
3652X **Stub axle carriers, Rustler®/Stampede®/Bandit (2), 6061-T6 aluminum (red-anodized)/ 5x11mm ball bearings (4)**
2754 Stub axle pins (4)
2753X Stub axles, rear (2)

Front Suspension & Steering

2728 **Ball bearings (5x8x2.5mm) (2)**
4606 **Ball bearings (5x8x2.5mm) (8) (for wheels only)**
5114 **Ball bearings, blue rubber sealed (5x8x2.5mm) (2)**
2545 Bellcrank bushings (plastic) (5x8x2.5mm) (4)
2530 **Bulkhead (front) (black)**
2530A Bulkhead (front) (grey)
2432 Caster blocks (l&r) (30-degree)
2437 Front axles (2)
1942 Rod ends (16 long & 4 short)/ hollow ball connectors (18)/ ball screws (2)
5525R **Rod ends, heavy duty (Jato®/Slayer) (8)**
2742 Rod ends, long (6)/ hollow ball connectors (6)
5347 **Rod ends, Revo® (large) with hollow balls (12)**
2742X Rod ends, short (6)/ hollow balls (6)
3744 Servo saver w/adapters
3639 Shock tower (front)
3636 Steering blocks (l&r)
3736 **Steering blocks, left & right (2) (requires 5x11x4mm bearings)**
3636A **Steering blocks, Rustler®/Stampede®/Bandit (2), 6061-T6 aluminum (blue-anodized)/ 5x11mm ball bearings (4)**
3636G **Steering blocks, Rustler®/Stampede®/Bandit (2), 6061-T6 aluminum (green-anodized)/ 5x11mm ball bearings (4)**
3636P **Steering blocks, Rustler®/Stampede®/Bandit (2), 6061-T6 aluminum (pink-anodized)/ 5x11mm ball bearings (4)**
3636X **Steering blocks, Rustler®/Stampede®/Bandit (2), 6061-T6 aluminum (red-anodized)/ 5x11mm ball bearings (4)**
2531X Suspension arms (front) (2)
3740 **Suspension pins, 2.5x29mm (king pins) w/ e-clips (2) (strengthens caster blocks)**
2640 **Suspension pins, 44mm (2) w/ E-clips (Use with tie bar to strengthen front bulkhead)**
3640 **Suspension screw pin set, steel (hex drive) (requires part #2640 for a complete suspension pin set) (Bandit, Rustler®, Stampede®)**
2537 Threaded rods (20/25/44mm 1 ea.)/ (1) 12mm set screw
2532 **Tie bar, fiberglass (requires suspension pins, part# 2640)**

BANDIT® (24054-1/24054-4)

2444 **Turnbuckles, camber link, 47mm (67mm center to center) (front) (assembled with rod ends and hollow balls) (1 left, 1 right)**
2445 **Turnbuckles, toe link, 55mm (75mm center to center) (2) (assembled with rod ends and hollow balls)**

Hardware

3642 **Shoulder screws, Ultra shocks (3x12) (6)**
1552 **Motor screws, 3x8mm hex cap (6)/ washers (6)/ wrench**
4363 Ball screws (3x12mm) (lower shock attachment screws) (6)
1834 Body clips (12) (standard size)
3934 Body clips, heavy duty (12)
3980 Glow plug wrench (universal wrench)
3647 Nuts, 4mm flanged nylon locking (steel, serrated) (8)
1747 Nuts, 4mm nylon locking (10)
1747R **Nuts, aluminum, flanged, serrated (4mm) (blue-anodized) (4)**
1747G **Nuts, aluminum, flanged, serrated (4mm) (green-anodized) (4)**
1747P **Nuts, aluminum, flanged, serrated (4mm) (pink-anodized) (4)**
1747P **Nuts, aluminum, flanged, serrated (4mm) (pink-anodized) (4)**
1747A **Nuts, aluminum, flanged, serrated (4mm) (red-anodized) (4)**
1985 PTFE-coated washers, 5x8x0.5mm (20) (use with ball bearings)
1942 Rod ends (16 long & 4 short)/ hollow ball connectors (18)/ ball screws (2)
5525R **Rod ends, heavy duty (Jato®/Slayer) (8)**
2742 Rod ends, long (6)/ hollow ball connectors (6)
5347 **Rod ends, Revo® (large) with hollow balls (12)**
2742X Rod ends, short (6)/ hollow balls (6)
3739 Screw pin set (Rustler®/ Bandit/ Stampede®)
3229 Screws, 2.5x10mm cap-head machine (hex drive) (6)
3965 Screws, 2.5x8mm cap-head machine (6)
2587 Screws, 3x10mm cap-head machine (6) (no washer)
2675 Screws, 3x10mm roundhead self-tapping (6)
2648 Screws, 3x12mm countersunk self-tapping (6)
2676 Screws, 3x12mm roundhead self-tapping (6)
3186 Screws, 3x12mm washerhead machine (6)
3286 Screws, 3x12mm washerhead self-tapping (6)
2649 Screws, 3x15mm countersunk self-tapping (6)
2563 Screws, 3x15mm roundhead machine (6)
3187 Screws, 3x15mm washerhead machine (6)
3288 Screws, 3x15mm washerhead self-tapping (6)
2566 Screws, 3x20mm roundhead machine (6)
2567 Screws, 3x23mm roundhead machine (6)
2554 Screws, 3x6mm cap-head machine (hex drive) (6)
2558 Screws, 3x6mm roundhead machine (6)
3185X Screws, 3x8mm washerhead machine (large head for motor mount) (6)
3290 Screws, 3x8mm washerhead self-tapping (6)
2548 Screws, 4x12mm countersunk machine (100-degree) (6)
3167 Screws, 4x15mm countersunk machine (6)
2743 Set (grub) screws, 3mm hardened (12)
3742 Shoulder screws, steering bellcranks (3x30mm cap-head machine) (2)/ draglink shoulder screws (chrome) (2)
2754 Stub axle pins (4)
3740 Suspension pins, 2.5x29mm (king pins) w/ e-clips (2) (strengthens caster blocks)
2637 Suspension pins, 31.5mm, chrome (2) w/ E-clips (4)
2537 Threaded rods (20/25/44mm 1 ea.)/ (1) 12mm set screw
2746 **Washers, 3x6mm metal (12)**
2615 Wing buttons (2)/ set screws (2)/ spacers (2)/ 3x8mm CS (2)

Motors & Electronics

1726 Antenna, tube (1)/ vinyl antenna cap (1)/ wire retainer (1)
1552 **Motor screws, 3x8mm hex cap (6)/ washers (6)/ wrench**
2260 **BEC assembly (complete)**
3790 Gear adapter, fixed
2072A **Gear set (for 2070, 2075 servos)**
2252 **Gear set, metal (for 2250, 2255 servos)**
1275 **Motor, Stinger (20-turn, 540 size)**
3785 Motor, Titan® 12T (12-Turn, 550 size)
3351R **Motor, Velineon® 3500, brushless (assembled with 12-gauge wire and gold-plated bullet connectors)**
3725R Mounting plate, electronic speed control (for installation of XL-5/VXL into Bandit or Rustler®)
2254 **Servo case, aluminum (blue-anodized) (middle) (for 2250 servo)**
2253 **Servo case, aluminum (red-anodized) (middle) (for 2255 servo)**
2251 **Servo case, plastic (top, middle, bottom)/ gaskets/ hardware (for 2250, 2255 servos)**
2074 Servo case/gaskets (for 2056 and 2075 waterproof servos)
2053 Servo gears (for 2055, 2056 servos)
2075R **Servo, digital high-speed, metal gear (ball bearing), waterproof**
2075 **Servo, digital high-torque (ball bearing), waterproof**
2250 **Servo, digital high-torque 330 coreless, metal gear (ball bearing), waterproof**
2255 **Servo, digital high-torque 400 brushless, metal gear (ball bearing), waterproof**
2075X **Servo, digital high-torque, metal gear (ball bearing), waterproof**
2056 Servo, high-torque, waterproof (blue case)
3350R **Velineon® VXL-3s Brushless Power System, waterproof (includes VXL-3s waterproof ESC, Velineon 3500 motor, and speed control mounting plate (part #3725R))**
3355R **Velineon® VXL-3s Electronic Speed Control, waterproof (brushless) (fwd/rev/brake)**
3018R XL-5 Electronic Speed Control, waterproof (land version, low-voltage detection, fwd/rev/brake)

Radio System, Batteries & Chargers

2842X **5000mAh 7.4v 2-Cell 25C LiPo Battery**
2843X **5800mAh 7.4v 2-Cell 25C LiPo Battery**
2869X **7600mAh 7.4v 2-Cell 25C LiPo Battery**
2976 **AC to DC converter, 40W**
2938X **Adapter, Traxxas® iD® LiPo battery (adapts Traxxas iD batteries to separate balance ports)**
2943 **Battery charge indicators (green (4), blue (4), grey (4))**
6548 Battery door, transmitter (replacement for #6516, 6517, 6528, 6529, 6530 transmitters)
2914 **Battery, Power Cell AA Alkaline (4)**
2923X Battery, Power Cell, 3000mAh (NiMH, 7-C flat, 8.4V)
2926X **Battery, Power Cell, 3000mAh (NiMH, 7-C hump, 8.4V)**
2942X **Battery, Series 3 Power Cell, 3300mAh (NiMH, 6-C flat, 7.2V)**
2940X **Battery, Series 3 Power Cell, 3300mAh (NiMH, 7-C flat, 8.4V)**
2941X **Battery, Series 3 Power Cell, 3300mAh (NiMH, 7-C hump, 8.4V)**
2952X **Battery, Series 4 Power Cell, 4200mAh (NiMH, 6-C flat, 7.2V)**
2950X **Battery, Series 4 Power Cell, 4200mAh (NiMH, 7-C flat, 8.4V)**
2951X **Battery, Series 4 Power Cell, 4200mAh (NiMH, 7-C hump, 8.4V)**
2960X **Battery, Series 5 Power Cell, 5000mAh (NiMH, 7-C flat, 8.4V)**
2961X **Battery, Series 5 Power Cell, 5000mAh (NiMH, 7-C hump, 8.4V)**
2984 **Battery/charger completer pack (includes #2969 2-amp NiMH peak detecting AC charger (1), #2926X 3000mAh 8.4V 7-cell NiMH battery (1))**
2992 **Battery/charger completer pack (includes #2970 iD® charger (1), #2843X 5800mAh 7.4V 2-cell 25C LiPo battery (1))**
2260 **BEC assembly (complete)**
2975 Charger, DC, 4 amp (6 - 7 cell, 7.2 - 8.4 volt, NiMH)
2972 **Charger, EZ-Peak® Dual, 100W, NiMH/LiPo with iD® Auto Battery Identification**
2973 **Charger, EZ-Peak® Live Dual, 200W, NiMH/LiPo with iD® Auto Battery Identification**
2971 **Charger, EZ-Peak® Live, 100W, NiMH/LiPo with iD® Auto Battery Identification**
2970 **Charger, EZ-Peak® Plus, 4 amp, NiMH/LiPo with iD® Auto Battery Identification**
6541 **Connector, power tap (with cable) (long)/ wire tie**
2978 **Fuse, charger, 5A (2) (for #2974, 2975, 2977)**
2072A **Gear set (for 2070, 2075 servos)**
2252 **Gear set, metal (for 2250, 2255 servos)**
2968X **LiPo cell voltage checker/balancer (includes #2938X adapter for Traxxas® iD® batteries)**
2968 **LiPo cell voltage checker/balancer (requires #2938X adapter for Traxxas® iD® batteries)**
6554 **Mount, telemetry expander (fits Bandit, Rustler®, Slash 2WD)**
6535 **Mount, temperature sensor (electric motors)/ wire tie/ thermal pad**
6519 Receiver, micro, TQ 2.4GHz (3-channel)
6518 **Receiver, micro, TQi 2.4GHz with telemetry (5-channel)**
6526 **Sensor, auto-detectable, temperature**
6527 **Sensor, auto-detectable, voltage**
6520 **Sensor, RPM (long)/ 3x4mm BCS (2)/ 3x4 GS (1)**
6521 **Sensor, temperature and voltage (long)**
2254 **Servo case, aluminum (blue-anodized) (middle) (for 2250 servo)**
2253 **Servo case, aluminum (red-anodized) (middle) (for 2255 servo)**
2251 **Servo case, plastic (top, middle, bottom)/ gaskets/ hardware (for 2250, 2255 servos)**
2074 Servo case/gaskets (for 2056 and 2075 waterproof servos)
2053 Servo gears (for 2055, 2056 servos)
2075R **Servo, digital high-speed, metal gear (ball bearing), waterproof**
2075 **Servo, digital high-torque (ball bearing), waterproof**
2250 **Servo, digital high-torque 330 coreless, metal gear (ball bearing), waterproof**
2255 **Servo, digital high-torque 400 brushless, metal gear (ball bearing), waterproof**
2075X **Servo, digital high-torque, metal gear (ball bearing), waterproof**
2056 Servo, high-torque, waterproof (blue case)
6553X **Telemetry expander 2.0 and GPS module 2.0, TQi radio system**
6550X **Telemetry expander 2.0, TQi radio system (for use only with #6551X GPS module)**

6551X **Telemetry GPS module 2.0, TQi radio system (for use only with #6550X telemetry expander)**
6538 **Telemetry trigger magnet holders, spur gear/ magnet, 5x2mm (1)/ 3x8mm CCS (3)/ 3x10mm CCS (3)**
6540 **Telemetry trigger magnet, 5X2mm (1)**
6509R **TQi 2.4 GHz High Output radio system, 2-channel, Traxxas Link™ enabled, TSM (2-ch transmitter, 5-ch micro receiver)**
6507R **TQi 2.4 GHz High Output radio system, 4-channel with Traxxas Link™ Wireless Module, TSM (4-ch transmitter, 5-ch micro receiver)**
6516 Transmitter, TQ 2.4GHz, 2-channel (transmitter only)
6528 **Transmitter, TQi Traxxas Link™ enabled, 2.4GHz high output, 2-channel (transmitter only)**
6529 **Transmitter, TQi Traxxas Link™ enabled, 2.4GHz high output, 3-channel (transmitter only)**
6530 **Transmitter, TQi Traxxas Link™ enabled, 2.4GHz high output, 4-channel (transmitter only)**
6511 **Traxxas Link™ Wireless Module**
6537 **Wire retainers, gear cover/ 3x4mm BCS (2)**
3018R XL-5 Electronic Speed Control, waterproof (land version, low-voltage detection, fwd/rev/brake)

Ready-To-Race Model

24054-1 Bandit: 1/10 Scale Off-Road Buggy with TQ 2.4GHz radio system

Rear Suspension

3638 Shock tower (rear)
3652 Stub axle carriers (2)
3752 **Stub axle carriers (2) (requires 5x11x4mm bearings)**
3652A **Stub axle carriers, Rustler®/Stampede®/Bandit (2), 6061-T6 aluminum (blue-anodized)/ 5x11mm ball bearings (4)**
3652G **Stub axle carriers, Rustler®/Stampede®/Bandit (2), 6061-T6 aluminum (green-anodized)/ 5x11mm ball bearings (4)**
3652P **Stub axle carriers, Rustler®/Stampede®/Bandit (2), 6061-T6 aluminum (pink-anodized)/ 5x11mm ball bearings (4)**
3652P **Stub axle carriers, Rustler®/Stampede®/Bandit (2), 6061-T6 aluminum (pink-anodized)/ 5x11mm ball bearings (4)**
3652X **Stub axle carriers, Rustler®/Stampede®/Bandit (2), 6061-T6 aluminum (red-anodized)/ 5x11mm ball bearings (4)**
2753X Stub axles, rear (2)
2750R Suspension arms, long (rear)
3640 **Suspension screw pin set, steel (hex drive) (requires part #2640 for a complete suspension pin set) (Bandit, Rustler®, Stampede®)**

Shocks (Pro-level Aluminum)

2664 **Big Bore shock cylinder (long) (1)**
2666 **Big Bore shock cylinder (XX-long) (1)**
5862 **Big Bore shocks (hard-anodized & PTFE-coated T6 aluminum) (assembled with TiN shafts and springs) (front & rear) (4)**
2660 **Big Bore shocks (long) (hard-anodized & PTFE-coated T6 aluminum) (assembled with TiN shafts) w/o springs (front) (2)**
2662 **Big Bore shocks (XX-long) (hard-anodized & PTFE-coated T6 aluminum) (assembled with TiN shafts) w/o springs (rear) (2)**
2669 **Piston head set (2-hole (2)/ 3-hole (2))/ shock mounting bushings & washers (2) (Big Bore Shocks)**
2362 **Rebuild kit, Ultra shocks (for 2 shocks)**
1942 Rod ends (16 long & 4 short)/ hollow ball connectors (18)/ ball screws (2)
2742X Rod ends, short (6)/ hollow balls (6)
2667 **Shock caps, aluminum (Big Bore Shocks) (2)**
1664T **Shock shafts, hardened steel, titanium nitride coated (long) (2)**
2656T **Shock shafts, hardened steel, titanium nitride coated (xx-long) (2)**
1664 Shock shafts, steel, chrome finish (long) (2)
2765 Shock shafts, steel, chrome finish (X-long) (2)
1765 Silicone diaphragms (4)
1666 Silicone shock oil (30 wt)
2668 **Spring retainers, upper & lower (2)/ spring pre-load spacers: 1mm (4)/ 1.5mm (2)/ 2mm (2)/ 4mm (2)/ 8mm (2) (Big Bore Shocks)**
5860 **Springs, front (white) (progressive rate) (2) (fits #5862 aluminum Big Bore shocks)**
5859 **Springs, rear (white) (progressive rate) (2) (fits #5862 aluminum Big Bore shocks)**

Shocks (Ultra Shocks)

3642 **Attachment screws, shock (3x12mm shoulder screws) (6)**
3765A Body, Ultra Shock(s) (long) (grey) (2)
3766A Body, Ultra Shock(s) (XXL) (grey) (2)
2362 **Rebuild kit, Ultra shocks (for 2 shocks)**
1942 Rod ends (16 long & 4 short)/ hollow ball connectors (18)/ ball screws (2)
2742X Rod ends, short (6)/ hollow balls (6)
3767 **Shock caps (2)/ shock bottoms (2)**
8361 Shock caps (black) (4) (assembled with hollow balls)
3767A **Shock caps, aluminum (blue-anodized) (4) (fits all Ultra Shocks)**
3767G **Shock caps, aluminum (green-anodized) (4) (fits all Ultra Shocks)**
3767P **Shock caps, aluminum (pink-anodized) (4) (fits all Ultra Shocks)**
3767X **Shock caps, aluminum (red-anodized) (4) (fits all Ultra Shocks)**
1664T **Shock shafts, hardened steel, titanium nitride coated (long) (2)**
2765T **Shock shafts, hardened steel, titanium nitride coated (X-long) (2)**
1664 Shock shafts, steel, chrome finish (long) (2)
2765 Shock shafts, steel, chrome finish (X-long) (2)
1765 Silicone diaphragms (4)
1666 Silicone shock oil (30 wt)
3769 Spring pre-load spacers: 1mm (4)/ 2mm (2)/ 4mm (2)/ 8mm (2)
3768 Spring retainers, upper & lower (2)/ piston head set (2-hole (2)/ 3-hole (2))
2458 **Springs, front (black) (2)**
2458P **Springs, front (pink) (2)**
2458A Springs, front (white) (2)
2457 **Springs, rear (black) (2)**
2457P **Springs, rear (pink) (2)**
2457A Springs, rear (white) (2)
3760 **Ultra Shocks (black) (long) (complete w/ spring pre-load spacers & springs) (front) (2)**
3762 **Ultra Shocks (black) (xx-long) (complete w/ spring pre-load spacers & springs) (rear) (2)**
3760A Ultra Shocks (grey) (long) (complete w/ spring pre-load spacers & springs) (2)
3762A Ultra Shocks (grey) (xx-long) (complete w/ spring pre-load spacers & springs) (rear) (2)

Slipper Clutch Components

3793 Input shaft (slipper shaft) / spring pin
5552X Rebuild kit, slipper clutch (steel disc/ friction pads (3)/ spring (2)/ pin/ 4.0mm NL (1)/ 5.0mm NL (1))
2554 Screws, 3x6mm cap-head machine (hex drive) (6)
5556 Slipper pressure plate & hub (aluminum alloy)

Spur Gears & Pinion Gears

3790 Gear adapter, fixed
2416 **Gear, 16-T pinion (48-pitch) / set screw**
1918 **Gear, 18-T pinion (48-pitch) / set screw**
2419 **Gear, 19-T pinion (48-pitch) / set screw**
2421 Gear, 21-T pinion (48-pitch) / set screw
2423 **Gear, 23-T pinion (48-pitch) / set screw**
2426 **Gear, 26-T pinion (48-pitch)/set screw**
2431 **Gear, 31-T pinion (48-pitch) / set screw**
4725 **Gear, pinion (25-tooth) (48-pitch) / set screw**
4676 **Spur gear, 76-tooth (48-pitch) (for models with Torque-Control slipper clutch)**
4683 Spur gear, 83-tooth (48-pitch) (for models with Torque-Control slipper clutch)
4686 **Spur gear, 86-tooth (48-pitch) (for models with Torque-Control slipper clutch)**
4690 **Spur gear, 90-tooth (48-pitch) (for models with Torque-Control slipper clutch)**

Steering Components

2728 **Ball bearings (5x8x2.5mm) (2)**
5114 **Ball bearings, blue rubber sealed (5x8x2.5mm) (2)**
2545 Bellcrank bushings (plastic) (5x8x2.5mm) (4)
1942 Rod ends (16 long & 4 short)/ hollow ball connectors (18)/ ball screws (2)
2742 Rod ends, long (6)/ hollow ball connectors (6)
5347 **Rod ends, Revo® (large) with hollow balls (12)**
2742X Rod ends, short (6)/ hollow balls (6)
3744 Servo saver w/adapters
3742 Shoulder screws, steering bellcranks (3x30mm cap-head machine) (2)/ draglink shoulder screws (chrome) (2)
3743 Steering bellcranks (l&r)/ draglink
3743A **Steering bellcranks, drag link (blue-anodized 6061-T6 aluminum)/ 5x8mm ball bearings (4)/ hardware (assembled)**
3743G **Steering bellcranks, drag link (green-anodized 6061-T6 aluminum)/ 5x8mm ball bearings (4)/ hardware (assembled)**
3743P **Steering bellcranks, drag link (pink-anodized 6061-T6 aluminum)/ 5x8mm ball bearings (4)/ hardware (assembled)**
3743X **Steering bellcranks, drag link (red-anodized 6061-T6 aluminum)/ 5x8mm ball bearings (4)/ hardware (assembled)**
6845X **Steering bellcranks/ servo saver/ servo saver spring/ servo spring retainer/servo horn, steering**
2537 Threaded rods (20/25/44mm 1 ea.)/ (1) 12mm set screw
1937 Turnbuckles (54mm) (2)/ 3x6x4mm aluminum spacers (rear camber links)
2445 **Turnbuckles, toe link, 55mm (75mm center to center) (2) (assembled with rod ends and hollow balls)**

BANDIT® (24054-1/24054-4)

Suspension Linkage

3642 **Attachment screws, shock (3x12mm shoulder screws) (6)**
2441A Camber link set for Bandit (grey) (plastic/ non-adjustable)
2441 **Camber link set for Bandit (plastic/ non-adjustable)**
1942 Rod ends (16 long & 4 short)/ hollow ball connectors (18)/ ball screws (2)
5525R **Rod ends, heavy duty (Jato®/Slayer) (8)**
2742 Rod ends, long (6)/ hollow ball connectors (6)
5347 **Rod ends, Revo® (large) with hollow balls (12)**
2742X Rod ends, short (6)/ hollow balls (6)
3739 Screw pin set (Rustler®/ Bandit/ Stampede®)
3740 Suspension pins, 2.5x29mm (king pins) w/ e-clips (2) (strengthens caster blocks)
2637 **Suspension pins, 31.5mm, chrome (2) w/ E-clips (4) (front suspension arm to caster block)**
2640 **Suspension pins, 44mm (2) w/ E-clips (Use with tie bar to strengthen front bulkhead)**
3640 **Suspension screw pin set, steel (hex drive) (requires part #2640 for a complete suspension pin set) (Bandit, Rustler®, Stampede®)**
1937 Turnbuckles (54mm) (2)/ 3x6x4mm aluminum spacers (rear camber links)
1935 **Turnbuckles, 36mm (2)**
2443 **Turnbuckles, camber link, 36mm (56mm center to center) (rear) (assembled with rod ends and hollow balls) (1 left, 1 right)**
2444 **Turnbuckles, camber link, 47mm (67mm center to center) (front) (assembled with rod ends and hollow balls) (1 left, 1 right)**
2445 **Turnbuckles, toe link, 55mm (75mm center to center) (2) (assembled with rod ends and hollow balls)**

Team Traxxas Items

2514 **Decal sheet, racing sponsors**
6160X **DVD, Maxx® Power! Full Throttle Action (sleeve)**
9950 **Official Team Traxxas® racing decal set (flag logo/ 6-color)**
9909 **Traxxas® racing banner, red & black (3x7 feet)**

Tires & Wheels

3775 Bushings, self-lubricating (5x8x2.5mm) (12)
3647 Nuts, 4mm flanged nylon locking (steel, serrated) (8)
1747R **Nuts, aluminum, flanged, serrated (4mm) (blue-anodized) (4)**
1747G **Nuts, aluminum, flanged, serrated (4mm) (green-anodized) (4)**
1747P **Nuts, aluminum, flanged, serrated (4mm) (pink-anodized) (4)**
1747P **Nuts, aluminum, flanged, serrated (4mm) (pink-anodized) (4)**
1985 PTFE-coated washers, 5x8x0.5mm (20) (use with ball bearings)
1647 Silicone grease
2754 Stub axle pins (4)
2471A **Tires & wheels, assembled (Tracer 2.2" black chrome wheels, Alias ribbed 2.2" tires) (2) (Bandit front, medium compound w/ foam inserts)**
2478A **Tires & wheels, assembled (Tracer 2.2" black chrome wheels, Anaconda® 2.2" tires with foam inserts) (2) (Bandit rear)**
2470R Tires & wheels, assembled (Tracer 2.2" chrome wheels, Alias 2.2" tires) (2) (Bandit rear, soft compound with foam inserts)
2471R Tires & wheels, assembled (Tracer 2.2" chrome wheels, Alias ribbed 2.2" tires) (2) (Bandit front, soft compound w/ foam inserts)
2479R **Tires & wheels, assembled (Tracer 2.2" chrome wheels, Anaconda® 2.2" tires with foam inserts) (2) (Bandit front)**
2478R **Tires & wheels, assembled (Tracer 2.2" chrome wheels, Anaconda® 2.2" tires with foam inserts) (2) (Bandit rear)**
4740 **Tires, 2.1" Pro-Trax ribbed (front) (2)**
1771 **Tires, 2.1" spiked (front) (2)**
1770 **Tires, 2.15 spiked (rear) (2)**
2470 Tires, Alias® 2.2" (rear) (2)/ foam inserts (Bandit) (soft compound)
2471 Tires, Alias® ribbed 2.2" (wide, front) (2)/ foam inserts (Bandit) (soft compound)
2478 **Tires, Anaconda® 2.2" (rear) (2)/ foam inserts (Bandit) (soft compound)**
2479 **Tires, Anaconda® 2.2" (wide, front) (2)/foam inserts (Bandit) (soft compound)**
3471 **Tires, street slicks (front) (2)**
3470 **Tires, street slicks (rear) (2)**
2475 **Wheels, front (2)**
2474 **Wheels, rear (2)**
2473A **Wheels, Tracer 2.2" (black chrome) (2) (Bandit front)**
2472A **Wheels, Tracer 2.2" (black chrome) (2) (Bandit rear)**
2473 Wheels, Tracer 2.2" (chrome) (2) (Bandit front)
2472 Wheels, Tracer 2.2" (chrome) (2) (Bandit rear)

Transmission Components

1552 **Motor screws, 3x8mm hex cap (6)/ washers (6)/ wrench**
4607 **Ball bearings (5x11x4mm) (8)**
5116 Ball bearings, blue rubber sealed (5x11x4mm) (2)
3792 Cover, gear/ rubber gear cover plug/ 3x6 RM (2) (Stampede/Rustler/Bandit)
5478 **Flat wrench, 8mm (blue-anodized aluminum)**
3790 Gear adapter, fixed
3691 **Gearbox halves (l&r) (black) w/ idler gear shaft**
3691A Gearbox halves (l&r) (grey) w/ idler gear shaft
5148 Grease, white lithium
3696 Idler gear, steel (30-tooth)
3793 Input shaft (slipper shaft) / spring pin
2381X Main diff with steel ring gear/ side cover plate/ screws (Bandit, Stampede®, Rustler®)
2382 Planet gears (4)/ planet shafts (4)/ sun gears (2)/sun gear alignment shaft (1) all hardened steel
2388X Planetary gear differential with steel ring gear (complete) (fits Bandit, Stampede®, Rustler®)
5552X Rebuild kit, slipper clutch (steel disc/ friction pads (3)/ spring (2)/ pin/ 4.0mm NL (1)/ 5.0mm NL (1))
2554 Screws, 3x6mm cap-head machine (hex drive) (6)
3185X Screws, 3x8mm washerhead machine (large head for motor mount) (6)
1647 Silicone grease
5556 Slipper pressure plate & hub (aluminum alloy)
3195 Top drive gear, steel (22-tooth)

Traxxas Tools

3433X **Body reamer (aluminum handle)**
3433 **Body reamer (plastic handle)**
3436 **Cap, body reamer**
3432 **Scissors, curved tip**
3431 **Scissors, straight tip**
8712 **Speed Bit Essentials Set, hex and nut driver, 7-piece, includes premium handle (medium), travel pouch, hex drivers (straight: 1.5mm, 2.0mm, 2.5mm) and nut drivers (5.0mm, 5.5mm, 7.0mm, and 8.0mm), 1/4" drive**
8721 **Speed bit handle, medium (one piece)**
8720 **Speed bit handle, premium, large (rubber overmold)**
8722 **Speed bit handle, premium, medium (rubber overmold)**
8710 **Speed Bit Master Set, hex and nut driver, 13-piece, includes premium handle (medium), travel pouch, hex drivers (straight: 1.5mm, 2.0mm, 2.5mm, 3.0mm), (ball-end: 2.0mm, 2.5mm, 3.0mm), and nut drivers (4.00mm, 4.50mm, 5.00mm, 5.50mm, 7.00mm, 8.00mm),**
8711 **Speed Bit Master Set, hex driver, 7-piece straight and ball end, includes premium handle (medium), travel pouch, hex drivers (straight: 1.5mm, 2.0mm, 2.5mm, 3.0mm) (ball end: 2.0mm, 2.5mm, 3.0mm), 1/4" drive**
8719 **Speed Bit Master Set, nut driver, 6-piece, includes premium handle (medium), travel pouch, and nut drivers (4.0mm, 4.5mm, 5.0mm, 5.5mm, 7.0mm, 8.0mm), 1/4" drive**
8716 **Speed Bit Set, hex driver, 2-piece ball-end (2.0mm, 2.5mm), 1/4" drive**
8716X **Speed Bit Set, hex driver, 3-piece ball-end (2.0mm, 2.5mm, 3.0mm), 1/4" drive**
8715 **Speed Bit Set, hex driver, 3-piece straight (1.5mm, 2.0mm, 2.5mm), 1/4" drive**
8715X **Speed Bit Set, hex driver, 4-piece straight (1.5mm, 2.0mm, 2.5mm, 3.0mm), 1/4" drive**
3415 **Tool set with pouch (includes 1.5mm, 2.0mm, 2.5mm, 3.0mm, 3.5mm, 4mm drivers/ 4mm, 5mm, 5.5mm, 7mm and 8mm nut drivers/ 2mm, 4mm, and 5mm slotted screwdrivers/ #00 Phillips, #0 Phillips, and #1 Phillips screwdrivers/ 4mm and 8mm wrench/ driver handle**

Turnbuckles & Threaded Rods

1942 Rod ends (16 long & 4 short)/ hollow ball connectors (18)/ ball screws (2)
5525R **Rod ends, heavy duty (Jato®/Slayer) (8)**
2742 Rod ends, long (6)/ hollow ball connectors (6)
5347 **Rod ends, Revo® (large) with hollow balls (12)**
2742X Rod ends, short (6)/ hollow balls (6)
2537 Threaded rods (20/25/44mm 1 ea.)/ (1) 12mm set screw
1937 Turnbuckles (54mm) (2)/ 3x6x4mm aluminum spacers (rear camber links)
1935 **Turnbuckles, 36mm (2)**
2443 **Turnbuckles, camber link, 36mm (56mm center to center) (rear) (assembled with rod ends and hollow balls) (1 left, 1 right)**
2444 **Turnbuckles, camber link, 47mm (67mm center to center) (front) (assembled with rod ends and hollow balls) (1 left, 1 right)**
2445 **Turnbuckles, toe link, 55mm (75mm center to center) (2) (assembled with rod ends and hollow balls)**

REV. 201002 1244

TSM
TRAXXAS STABILITY MANAGEMENT

BANDIT VXL

BRUSHLESS

MODEL 24076-4

ELECTRIC POWERED
BRUSHLESS SPORTS BUGGY



70+ mph*

HIGH-CAPACITY 3000 MAH 7-CELL BATTERY AND 4-AMP DC FAST CHARGER

VELINEON BRUSHLESS POWER SYSTEM

TQi 2.4GHz TRANSMITTER COMPATIBLE WITH TRAXXAS LINK WIRELESS MODULE

THE FASTEST READY-TO-RACE® ELECTRIC BUGGY!

The Bandit VXL expands the Extreme Sports Buggy Legacy with extreme brushless power and exclusive Traxxas Stability Management. The new Velineon® Brushless Power System accelerates Bandit VXL into the stratosphere with jet-like thrust and incredible 70+mph top speed! The Bandit VXL is a low-slung, lightweight speed machine that's rocket fast on pavement and rips incredible roost off-road. Get a pair of Bandits together and the race is on. Bandit VXL is a driver's machine that will put your skills to the test with its mind-blowing top speed and lightning quick handling response. Out of the box, the Velineon Brushless Power System is optimized to put down the tire-melting horsepower, neck-snapping speed, and precision throttle response you expect from brushless. Most of all, it's brushless done the Traxxas way: wicked fast and easy to use. Just plug it in for an instant rush of power and adrenaline.

* With 3S LiPo (sold separately) and optional gearing

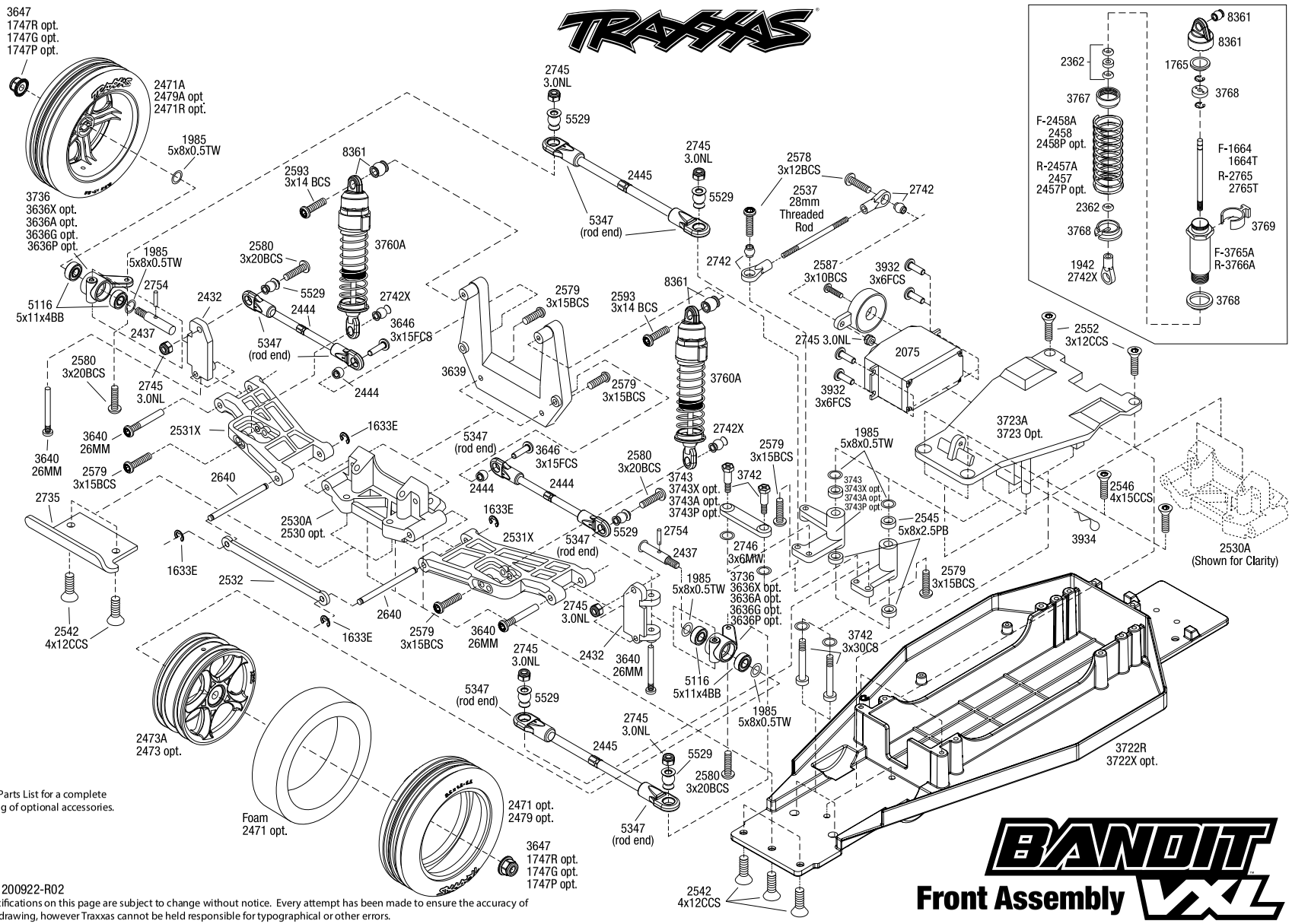

See Parts List for a complete listing of optional accessories.

REV 200922-R02

Specifications on this page are subject to change without notice. Every attempt has been made to ensure the accuracy of this drawing, however Traxxas cannot be held responsible for typographical or other errors.

BANDIT VXL
Front Assembly

BANDIT VXL® (24076-4)

BANDIT VXL Chassis Assembly

REV 200922-R02

See Parts List for a complete listing of optional accessories.

Specifications on this page are subject to change without notice. Every attempt has been made to ensure the accuracy of this drawing, however Traxxas cannot be held responsible for typographical or other errors.

Transmission Assembly

BANDIT VXL

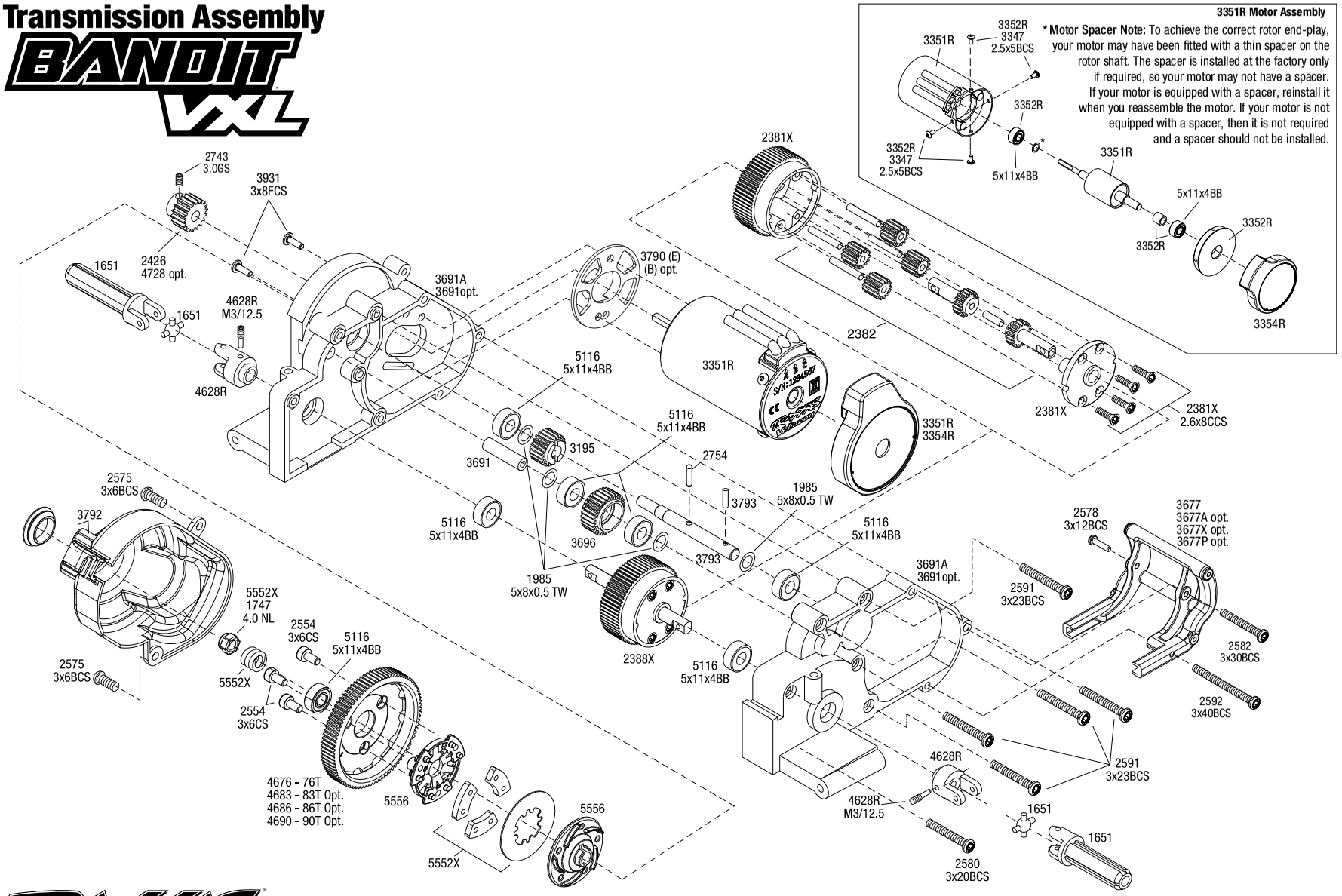

See Parts List for a complete listing of optional accessories.

REV 200922-R02

Specifications on this page are subject to change without notice. Every attempt has been made to ensure the accuracy of this drawing, however Traxxas cannot be held responsible for typographical or other errors.

BANDIT VXL Rear Assembly

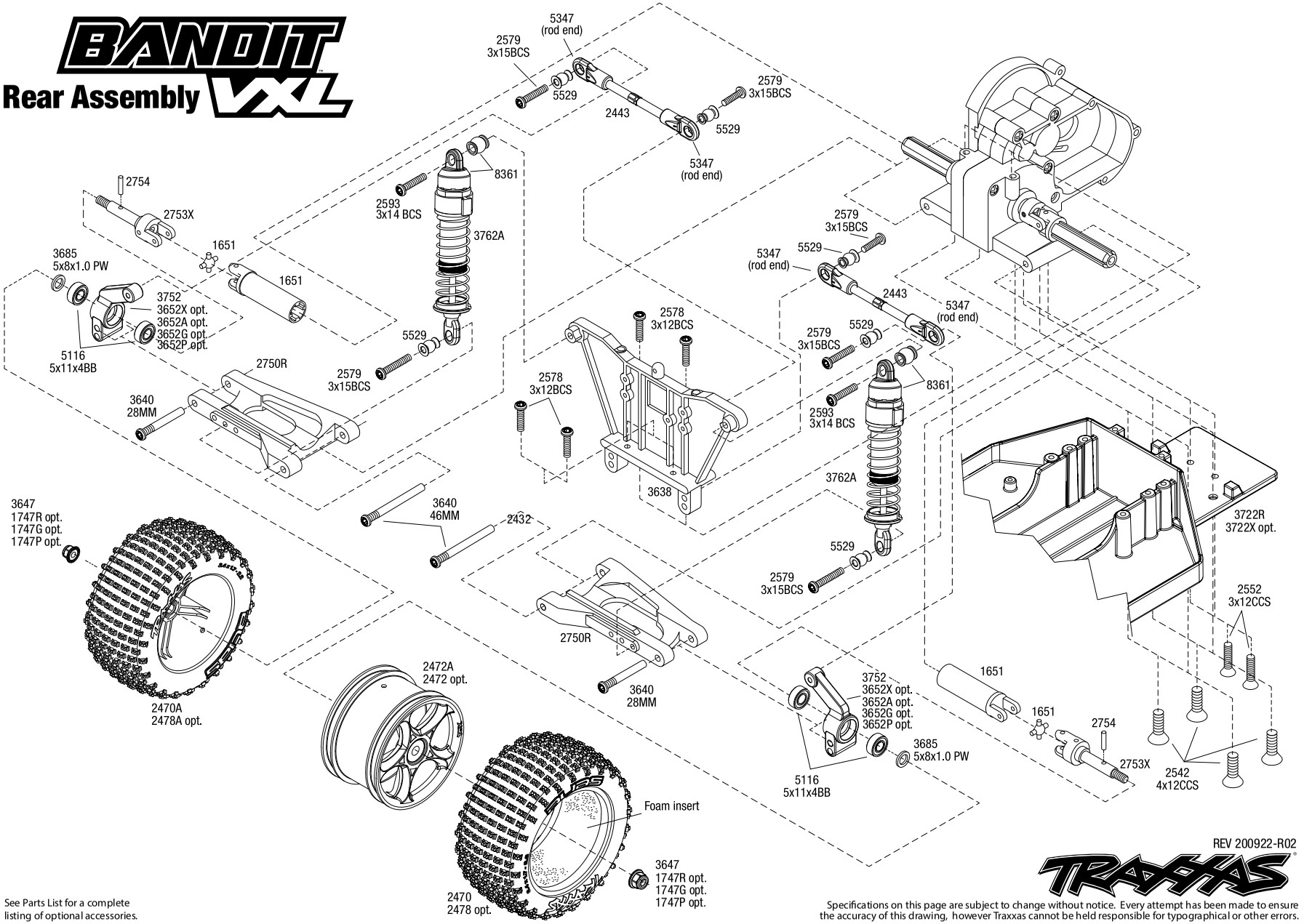

REV 200922-R02

See Parts List for a complete listing of optional accessories.

Specifications on this page are subject to change without notice. Every attempt has been made to ensure the accuracy of this drawing, however Traxxas cannot be held responsible for typographical or other errors.

PARTS SHOWN IN BOLD ARE OPTIONAL ACCESSORIES.

Part categories and individual part listings are arranged alphabetically.

Bearings & Bushings

4607 **Ball bearings (5x11x4mm) (8)**
2728 **Ball bearings (5x8x2.5mm) (2)**
5116 Ball bearings, blue rubber sealed (5x11x4mm) (2)
5114 **Ball bearings, blue rubber sealed (5x8x2.5mm) (2)**
2545 Bellcrank bushings (plastic) (5x8x2.5mm) (4)
1675 **Bushings, self-lubricating (5x11x4mm) (14)**
1985 PTFE-coated washers, 5x8x0.5mm (20) (use with ball bearings)

Body & Accessories

1926 **Antenna caps, vinyl (2)/ antenna spool**
1726 Antenna, tube (1)/ vinyl antenna cap (1)/ wire retainer (1)
1834 Body clips (12) (standard size)
1815 **Body washers (8)**
6716 **Body washers, foam, 2mm (2)/ 3mm (2)/ 4mm (4)**
2417 **Body, Bandit (front & rear) (clear, requires painting)/ window, lights, grille decal sheet**
2514 **Decal sheet, racing sponsors**
2413R Decal sheets, Bandit VXL
5185 **Tires, rubber (2) (fits Traxxas® wheelie bar wheels)**
4974 **Wheelie bar arm (1)/ connector (1)/ 3x12 SS (hex drive) (4)**
3677A **Wheelie bar mount (1) / hardware (green)**
3677P **Wheelie bar mount (1) / hardware (pink)**
3677 Wheelie bar mount (1)/ hardware (black)
3677X **Wheelie bar mount (1)/ hardware (blue)**
3678 **Wheelie bar, assembled (black) (fits Slash, Bandit, Rustler®, Stampede® series)**
3678X **Wheelie bar, assembled (blue) (fits Slash, Bandit, Rustler®, Stampede® series)**
3678A **Wheelie bar, assembled (green) (fits Slash, Bandit, Rustler®, Stampede® series)**
3678P **Wheelie bar, assembled (pink) (fits Slash, Bandit, Rustler®, Stampede® series)**
4976 **Wheels (4)/ axles (2) (for T-Maxx®/E-Maxx wheelie bar)**
5186A **Wheels, aluminum (blue-anodized) (2)/ 5x8mm ball bearings (4)/ axles (2)/ rubber tires (2)**
5186 **Wheels, aluminum (red-anodized) (2)/ 5x8mm ball bearings (4)/ axles (2)/ rubber tires (2)**
2615 Wing buttons (2)/ set screws (2)/ spacers (2)/ 3x8mm CS (2)
2414 Wing wire

Chassis & Attachments

3727 **Battery hold-down plate (black)/ metal posts (2)/body clips (2)**
3727A Battery hold-down plate (grey) / metal posts (2) / body clips (2)
3628 Box, receiver (sealed)/ foam pad/2.5x8mm CS (4)/ 3x10mm CS (2)
2735 Bumper (front)
2735P **Bumper (front) (pink)**
3722X **Lower chassis (black) (166mm long battery compartment) (fits both flat and hump style battery packs) (use only with #3725R ESC mounting plate)**
3722R Lower chassis (grey) (166mm long battery compartment) (fits both flat and hump style battery packs) (use only with #3725R ESC mounting plate)
3725R Mounting plate, electronic speed control (for installation of XL-5/VXL into Bandit or Rustler®)
3629 Seal kit, receiver box (includes o-ring, seals, and silicone grease)
5185 **Tires, rubber (2) (fits Traxxas® wheelie bar wheels)**
3723 **Upper chassis (black)**
3723A Upper chassis (grey)
4974 **Wheelie bar arm (1)/ connector (1)/ 3x12 SS (hex drive) (4)**
3677A **Wheelie bar mount (1) / hardware (green)**
3677P **Wheelie bar mount (1) / hardware (pink)**
3677 Wheelie bar mount (1)/ hardware (black)
3677X **Wheelie bar mount (1)/ hardware (blue)**
3678 **Wheelie bar, assembled (black) (fits Slash, Bandit, Rustler®, Stampede® series)**
3678X **Wheelie bar, assembled (blue) (fits Slash, Bandit, Rustler®, Stampede® series)**
3678A **Wheelie bar, assembled (green) (fits Slash, Bandit, Rustler®, Stampede® series)**
3678P **Wheelie bar, assembled (pink) (fits Slash, Bandit, Rustler®, Stampede® series)**
4976 **Wheels (4)/ axles (2) (for T-Maxx®/E-Maxx wheelie bar)**
5186A **Wheels, aluminum (blue-anodized) (2)/ 5x8mm ball bearings (4)/ axles (2)/ rubber tires (2)**
5186 **Wheels, aluminum (red-anodized) (2)/ 5x8mm ball bearings (4)/ axles (2)/ rubber tires (2)**

Differential Components

2381X Main diff with steel ring gear/ side cover plate/ screws (Bandit, Stampede®, Rustler®)
2382 Planet gears (4)/ planet shafts (4)/ sun gears (2)/sun gear alignment shaft (1) all hardened steel
2388X Planetary gear differential with steel ring gear (complete) (fits Bandit, Stampede®, Rustler®)
1647 Silicone grease

Driveline Components

4628R Differential output yokes, black (2)/ 3x5mm countersunk screws (2)/ screw pin (2)
4628X **Differential output yokes, hardened steel (w/ U-joints) (2)**
2751 **Half-shaft pro-pack (internal-splined (6)/external-splined (6)) (plastic shafts only)**
1651 Half-shafts (internal-splined (2)/external-splined (2))/ metal U-joints (4)
3752 Stub axle carriers (2) (requires 5x11x4mm bearings)
3652A **Stub axle carriers, Rustler®/Stampede®/Bandit (2), 6061-T6 aluminum (blue-anodized)/ 5x11mm ball bearings (4)**
3652G **Stub axle carriers, Rustler®/Stampede®/Bandit (2), 6061-T6 aluminum (green-anodized)/ 5x11mm ball bearings (4)**
3652P **Stub axle carriers, Rustler®/Stampede®/Bandit (2), 6061-T6 aluminum (pink-anodized)/ 5x11mm ball bearings (4)**
3652X **Stub axle carriers, Rustler®/Stampede®/Bandit (2), 6061-T6 aluminum (red-anodized)/ 5x11mm ball bearings (4)**
2754 Stub axle pins (4)
2753X Stub axles, rear (2)

Front Suspension & Steering

2728 **Ball bearings (5x8x2.5mm) (2)**
2545 Bellcrank bushings (plastic) (5x8x2.5mm) (4)
2530 **Bulkhead (front) (black)**
2530A Bulkhead (front) (grey)
2432 Caster blocks (l&r) (30-degree)
2437 Front axles (2)
5525R **Rod ends, heavy duty (Jato®/Slayer) (8)**
5347 Rod ends, Revo® (large) with hollow balls (12)
3646 Screws, 3x15mm flat-head machine (hex drive) (6)
3744 Servo saver w/adapters
3639 Shock tower (front)
3736 Steering blocks, left & right (2) (requires 5x11x4mm bearings)
3636A **Steering blocks, Rustler®/Stampede®/Bandit (2), 6061-T6 aluminum (blue-anodized)/ 5x11mm ball bearings (4)**
3636G **Steering blocks, Rustler®/Stampede®/Bandit (2), 6061-T6 aluminum (green-anodized)/ 5x11mm ball bearings (4)**
3636P **Steering blocks, Rustler®/Stampede®/Bandit (2), 6061-T6 aluminum (pink-anodized)/ 5x11mm ball bearings (4)**
3636X **Steering blocks, Rustler®/Stampede®/Bandit (2), 6061-T6 aluminum (red-anodized)/ 5x11mm ball bearings (4)**
2531X Suspension arms (front) (2)
2640 Suspension pins, 44mm (2) w/ e-clips
3640 Suspension screw pin set, steel (hex drive) (requires part #2640 for a complete suspension pin set) (Bandit, Rustler®, Stampede®)
2537 Threaded rods (20/25/44mm 1 ea.)/ (1) 12mm set screw
2532 Tie bar, fiberglass
2444 Turnbuckles, camber link, 47mm (67mm center to center) (front) (assembled with rod ends and hollow balls) (1 left, 1 right)
2445 Turnbuckles, toe link, 55mm (75mm center to center) (2) (assembled with rod ends and hollow balls)

Hardware

1834 Body clips (12) (standard size)
3934 Body clips, heavy duty (12)
2585 Cylinder head bolts, marine 3x20mm CS (6) (TRX 2.5)
2586 Screws, 3x15mm cap-head machine (hex drive) (6)
2745 Nuts, 3mm nylon locking (12)
3647 Nuts, 4mm flanged nylon locking (steel, serrated) (8)
1747 Nuts, 4mm nylon locking (10)
1747A **Nuts, aluminum, flanged, serrated (4mm) (red-anodized) (4)**
1985 PTFE-coated washers, 5x8x0.5mm (20) (use with ball bearings)
1942 Rod ends (16 long & 4 short)/ hollow ball connectors (18)/ ball screws (2)
5347 Rod ends, Revo® (large) with hollow balls (12)
2742X Rod ends, short (6)/ hollow balls (6)
3347 Screws, 2.5x5mm button-head machine (hex drive) (6)
3215 Screws, 2.5x6mm cap-head machine (hex drive) (6)
2587 Screws, 3x10mm cap-head machine (6) (no washer)

BANDIT VXL® (24076-4)

2578	Screws, 3x12mm button-head machine (hex drive) (6)
2552	Screws, 3x12mm countersunk machine (6) (hex drive)
2579	Screws, 3x15mm button-head machine (hex drive) (6)
3646	Screws, 3x15mm flat-head machine (hex drive) (6)
2580	Screws, 3x20mm button-head machine (hex drive) (6)
2591	Screws, 3x23mm button-head machine (hex drive) (6)
2582	Screws, 3x30mm button-head machine (hex drive) (6)
2592	Screws, 3x40mm button-head machine (hex drive) (6)
2575	Screws, 3x6mm button-head machine (hex drive) (6)
2554	Screws, 3x6mm cap-head machine (hex drive) (6)
3932	Screws, 3x6mm flat-head machine (hex drive) (6)
2576	Screws, 3x8mm button-head machine (hex drive) (6)
3931	Screws, 3x8mm flat-head machine (hex drive) (6)
2542	Screws, 4x12mm countersunk machine (hex drive) (6)
5529	Shim set, 3x7x1mm (2), 3x6x0.5mm (4), 3x7x2mm (2)/ hollow balls, captured (4)
3742	Shoulder screws, steering bellcranks (3x30mm cap-head machine) (2)/ draglink shoulder screws (chrome) (2)
3642X	**Shoulder screws, Ultra Shocks (3x12 hex drive) (6)**
2754	Stub axle pins (4)
2746	**Washers, 3x6mm metal (12)**
3685	White plastic washers (5x8x1.0mm) (6)
2615	Wing buttons (2)/ set screws (2)/ spacers (2)/ 3x8mm CS (2)

Motors & Electronics

1726	Antenna, tube (1)/ vinyl antenna cap (1)/ wire retainer (1)
1552	**Motor screws (3x8mm hex cap) (6)/washers (6)/ wrench**
2260	**BEC assembly (complete)**
3342	Bullet connectors, male, 3.5mm (3)/ heat shrink
3340	**Cooling fan, Velineon® VXL-3s ESC**
3790	Gear adapter, fixed
2072A	Gear set (for 2070, 2075 servos)
2252	**Gear set, metal (for 2250, 2255 servos)**
3354R	Motor cover, endbell (Velineon® 3500)
3351R	Motor, Velineon® 3500, brushless (assembled with 12-gauge wire and gold-plated bullet connectors)
3725R	Mounting plate, electronic speed control (for installation of XL-5/VXL into Bandit or Rustler®)
3352R	Rebuild kit, Velineon® 3500 (includes plastic endbell, 5x11x4mm ball bearings (2), 2.5x5mm BCS (with threadlock) (4), rear bushing)
3347	Screws, 2.5x5mm button-head machine (hex drive) (6)
3931	Screws, 3x8mm flat-head machine (hex drive) (6)
2254	**Servo case, aluminum (blue-anodized) (middle) (for 2250 servo)**
2253	**Servo case, aluminum (red-anodized) (middle) (for 2255 servo)**
2251	**Servo case, plastic (top, middle, bottom)/ gaskets/ hardware (for 2250, 2255 servos)**
2074	Servo case/gaskets (for 2056 and 2075 waterproof servos)
2075R	**Servo, digital high-speed, metal gear (ball bearing), waterproof**
2075	Servo, digital high-torque (ball bearing), waterproof
2250	**Servo, digital high-torque 330 coreless, metal gear (ball bearing), waterproof**
2255	**Servo, digital high-torque 400 brushless, metal gear (ball bearing), waterproof**
2075X	**Servo, digital high-torque, metal gear (ball bearing), waterproof**
3350R	Velineon® VXL-3s Brushless Power System, waterproof (includes VXL-3s waterproof ESC, Velineon 3500 motor, and speed control mounting plate (part #3725R))
3355R	Velineon® VXL-3s Electronic Speed Control, waterproof (brushless) (fwd/rev/brake)
3343	Wire, 12-gauge, silicone (Maxx® Cable) (650mm or 26 inches)

Radio System, Batteries & Chargers

2849X	**4000mAh 11.1v 3-Cell 25C LiPo Battery**
2872X	**5000mAh 11.1v 3-Cell 25C LiPo Battery**
2842X	**5000mAh 7.4v 2-Cell 25C LiPo Battery**
2843X	**5800mAh 7.4v 2-Cell 25C LiPo Battery**
2869X	**7600mAh 7.4v 2-Cell 25C LiPo Battery**
2976	**AC to DC converter, 40W**
2938X	**Adapter, Traxxas® iD® LiPo battery (adapts Traxxas iD batteries to separate balance ports)**
2943	**Battery charge indicators (green (4), blue (4), grey (4))**
6548	Battery door, transmitter (replacement for #6516, 6517, 6528, 6529, 6530 transmitters)
2914	**Battery, Power Cell AA Alkaline (4)**
2923X	**Battery, Power Cell, 3000mAh (NiMH, 7-C flat, 8.4V)**
2926X	**Battery, Power Cell, 3000mAh (NiMH, 7-C hump, 8.4V)**
2942X	**Battery, Series 3 Power Cell, 3300mAh (NiMH, 6-C flat, 7.2V)**
2940X	**Battery, Series 3 Power Cell, 3300mAh (NiMH, 7-C flat, 8.4V)**
2941X	**Battery, Series 3 Power Cell, 3300mAh (NiMH, 7-C hump, 8.4V)**
2952X	**Battery, Series 4 Power Cell, 4200mAh (NiMH, 6-C flat, 7.2V)**
2950X	**Battery, Series 4 Power Cell, 4200mAh (NiMH, 7-C flat, 8.4V)**
2951X	**Battery, Series 4 Power Cell, 4200mAh (NiMH, 7-C hump, 8.4V)**
2960X	**Battery, Series 5 Power Cell, 5000mAh (NiMH, 7-C flat, 8.4V)**
2961X	**Battery, Series 5 Power Cell, 5000mAh (NiMH, 7-C hump, 8.4V)**
2963X	**Battery, Series 5 Power Cell, 5000mAh (NiMH, 8-C hump, 9.6V)**
2984	**Battery/charger completer pack (includes #2969 2-amp NiMH peak detecting AC charger (1), #2926X 3000mAh 8.4V 7-cell NiMH battery (1))**
2992	**Battery/charger completer pack (includes #2970 iD® charger (1), #2843X 5800mAh 7.4V 2-cell 25C LiPo battery (1))**
2994	**Battery/charger completer pack (includes #2970 iD® charger (1), #2849X 4000mAh 11.1v 3-Cell 25C LiPo Battery (1))**
2260	**BEC assembly (complete)**
2975	**Charger, DC, 4 amp (6 - 7 cell, 7.2 - 8.4 volt, NiMH)**
2972	**Charger, EZ-Peak® Dual, 100W, NiMH/LiPo with iD® Auto Battery Identification**
2973	**Charger, EZ-Peak® Live Dual, 200W, NiMH/LiPo with iD® Auto Battery Identification**
2971	**Charger, EZ-Peak® Live, 100W, NiMH/LiPo with iD® Auto Battery Identification**
2970	**Charger, EZ-Peak® Plus, 4 amp, NiMH/LiPo with iD® Auto Battery Identification**
6525	**Communication link, telemetry expander**
6541	**Connector, power tap (with cable) (long)/ wire tie**
6512	Cover plate, Traxxas Link™ Wireless Module
2978	**Fuse, charger, 5A (2) (for #2974, 2975, 2977)**
2072A	Gear set (for 2070, 2075 servos)
2252	**Gear set, metal (for 2250, 2255 servos)**
2968X	**LiPo cell voltage checker/balancer (includes #2938X adapter for Traxxas® iD® batteries)**
2968	**LiPo cell voltage checker/balancer (requires #2938X adapter for Traxxas® iD® batteries)**
6554	**Mount, telemetry expander (fits Bandit, Rustler®, Slash 2WD)**
6535	**Mount, temperature sensor (electric motors)/ wire tie/ thermal pad**
6533	Receiver, micro, TQi 2.4GHz with telemetry & TSM (5-channel)
6552	**Seal kit, expander box (includes o-ring, seals, and silicone grease)**
6526	**Sensor, auto-detectable, temperature**
6527	**Sensor, auto-detectable, voltage**
6520	**Sensor, RPM (long)/ 3x4mm BCS (2)/ 3x4 GS (1)**
6521	**Sensor, temperature and voltage (long)**
2254	**Servo case, aluminum (blue-anodized) (middle) (for 2250 servo)**
2253	**Servo case, aluminum (red-anodized) (middle) (for 2255 servo)**
2251	**Servo case, plastic (top, middle, bottom)/ gaskets/ hardware (for 2250, 2255 servos)**
2074	Servo case/gaskets (for 2056 and 2075 waterproof servos)
2075R	**Servo, digital high-speed, metal gear (ball bearing), waterproof**
2075	Servo, digital high-torque (ball bearing), waterproof
2250	**Servo, digital high-torque 330 coreless, metal gear (ball bearing), waterproof**
2255	**Servo, digital high-torque 400 brushless, metal gear (ball bearing), waterproof**
2075X	**Servo, digital high-torque, metal gear (ball bearing), waterproof**
6553X	**Telemetry expander 2.0 and GPS module 2.0, TQi radio system**
6550X	**Telemetry expander 2.0, TQi radio system (for use only with #6551X GPS module)**
6551X	**Telemetry GPS module 2.0, TQi radio system (for use only with #6550X telemetry expander)**
6538	**Telemetry trigger magnet holders, spur gear/ magnet, 5x2mm (1)/ 3x8mm CCS (3)/ 3x10mm CCS (3)**
6540	**Telemetry trigger magnet, 5X2mm (1)**
6509R	TQi 2.4 GHz High Output radio system, 2-channel, Traxxas Link™ enabled, TSM (2-ch transmitter, 5-ch micro receiver)
6507R	**TQi 2.4 GHz High Output radio system, 4-channel with Traxxas Link™ Wireless Module, TSM (4-ch transmitter, 5-ch micro receiver)**
6528	Transmitter, TQi Traxxas Link™ enabled, 2.4GHz high output, 2-channel (transmitter only)
6529	**Transmitter, TQi Traxxas Link™ enabled, 2.4GHz high output, 3-channel (transmitter only)**
6530	**Transmitter, TQi Traxxas Link™ enabled, 2.4GHz high output, 4-channel (transmitter only)**
6511	**Traxxas Link™ Wireless Module**
3355R	Velineon® VXL-3s Electronic Speed Control, waterproof (brushless) (fwd/rev/brake)
6537	**Wire retainers, gear cover/ 3x4mm BCS (2)**

Ready-To-Race Model

24076-4	Bandit VXL: 1/10 Scale Off-Road Buggy with TQi Traxxas Link™ Enabled 2.4GHz Radio System & Traxxas Stability Management (TSM)®

REV. 201002 1237

Rear Suspension

3638 Shock tower (rear)
3752 Stub axle carriers (2) (requires 5x11x4mm bearings)
3652A Stub axle carriers, Rustler®/Stampede®/Bandit (2), 6061-T6 aluminum (blue-anodized)/ 5x11mm ball bearings (4)
3652G Stub axle carriers, Rustler®/Stampede®/Bandit (2), 6061-T6 aluminum (green-anodized)/ 5x11mm ball bearings (4)
3652P Stub axle carriers, Rustler®/Stampede®/Bandit (2), 6061-T6 aluminum (pink-anodized)/ 5x11mm ball bearings (4)
3652X Stub axle carriers, Rustler®/Stampede®/Bandit (2), 6061-T6 aluminum (red-anodized)/ 5x11mm ball bearings (4)
2753X Stub axles, rear (2)
2750R Suspension arms, long (rear)
3640 Suspension screw pin set, steel (hex drive) (requires part #2640 for a complete suspension pin set) (Bandit, Rustler®, Stampede®)

Shocks (Pro-Level Aluminum)

2664 Big Bore shock cylinder (long) (1)
2666 Big Bore shock cylinder (XX-long) (1)
5862 Big Bore shocks (hard-anodized & PTFE-coated T6 aluminum) (assembled with TiN shafts and springs) (front & rear) (4)
2660 Big Bore shocks (long) (hard-anodized & PTFE-coated T6 aluminum) (assembled with TiN shafts) w/o springs (front) (2)
2662 Big Bore shocks (XX-long) (hard-anodized & PTFE-coated T6 aluminum) (assembled with TiN shafts) w/o springs (rear) (2)
2669 Piston head set (2-hole (2)/ 3-hole (2))/ shock mounting bushings & washers (2) (Big Bore Shocks)
2362 Rebuild kit, Ultra shocks (for 2 shocks)
1942 Rod ends (16 long & 4 short)/ hollow ball connectors (18)/ ball screws (2)
2742X Rod ends, short (6)/ hollow balls (6)
2667 Shock caps, aluminum (Big Bore Shocks) (2)
1664T Shock shafts, hardened steel, titanium nitride coated (long) (2)
2765T Shock shafts, hardened steel, titanium nitride coated (X-long) (2)
1664 Shock shafts, steel, chrome finish (long) (2)
2765 Shock shafts, steel, chrome finish (X-long) (2)
1765 Silicone diaphragms (4)
1666 Silicone shock oil (30 wt)
2668 Spring retainers, upper & lower (2)/ spring pre-load spacers: 1mm (4)/ 1.5mm (2)/ 2mm (2)/ 4mm (2)/ 8mm (2) (Big Bore Shocks)
5860 Springs, front (white) (progressive rate) (2) (fits #5862 aluminum Big Bore shocks)
5859 Springs, rear (white) (progressive rate) (2) (fits #5862 aluminum Big Bore shocks)

Shocks (Ultra Shocks)

3642 Attachment screws, shock (3x12mm shoulder screws) (6)
3765A Body, Ultra Shock(s) (long) (grey) (2)
3766A Body, Ultra Shock(s) (XXL) (grey) (2)
2362 Rebuild kit, Ultra shocks (for 2 shocks)
1942 Rod ends (16 long & 4 short)/ hollow ball connectors (18)/ ball screws (2)
2742X Rod ends, short (6)/ hollow balls (6)
3767 Shock caps (2)/ shock bottoms (2)
8361 Shock caps (black) (4) (assembled with hollow balls)
3767A Shock caps, aluminum (blue-anodized) (4) (fits all Ultra Shocks)
3767G Shock caps, aluminum (green-anodized) (4) (fits all Ultra Shocks)
3767P Shock caps, aluminum (pink-anodized) (4) (fits all Ultra Shocks)
3767X Shock caps, aluminum (red-anodized) (4) (fits all Ultra Shocks)
1664T Shock shafts, hardened steel, titanium nitride coated (long) (2)
2765T Shock shafts, hardened steel, titanium nitride coated (X-long) (2)
1664 Shock shafts, steel, chrome finish (long) (2)
2765 Shock shafts, steel, chrome finish (X-long) (2)
1765 Silicone diaphragms (4)
1666 Silicone shock oil (30 wt)
3769 Spring pre-load spacers: 1mm (4)/ 2mm (2)/ 4mm (2)/ 8mm (2)
3768 Spring retainers, upper & lower (2)/ piston head set (2-hole (2)/ 3-hole (2))
2458 Springs, front (black) (2)
2458P Springs, front (pink) (2)
2458A Springs, front (white) (2)
2457 Springs, rear (black) (2)
2457P Springs, rear (pink) (2)
2457A Springs, rear (white) (2)
3760 Ultra Shocks (black) (long) (complete w/ spring pre-load spacers & springs) (front) (2)
3762 Ultra Shocks (black) (xx-long) (complete w/ spring pre-load spacers & springs) (rear) (2)
3760A Ultra Shocks (grey) (long) (complete w/ spring pre-load spacers & springs) (2)
3762A Ultra Shocks (grey) (xx-long) (complete w/ spring pre-load spacers & springs) (rear) (2)

Slipper Clutch Components

3793 Input shaft (slipper shaft) / spring pin
5552X Rebuild kit, slipper clutch (steel disc/ friction pads (3)/ spring (2)/ pin/ 4.0mm NL (1)/ 5.0mm NL (1))
2554 Screws, 3x6mm cap-head machine (hex drive) (6)
5556 Slipper pressure plate & hub (aluminum alloy)

Spur Gears & Pinion Gears

3790 Gear adapter, fixed
2416 Gear, 16-T pinion (48-pitch) / set screw
1918 Gear, 18-T pinion (48-pitch) / set screw
2419 Gear, 19-T pinion (48-pitch) / set screw
2423 Gear, 23-T pinion (48-pitch) / set screw
2426 Gear, 26-T pinion (48-pitch)/set screw
2431 Gear, 31-T pinion (48-pitch) / set screw
4725 Gear, pinion (25-tooth) (48-pitch) / set screw
4728 Gear, pinion (28-tooth) (48-pitch)/ set screw
4676 Spur gear, 76-tooth (48-pitch) (for models with Torque-Control slipper clutch)
4683 Spur gear, 83-tooth (48-pitch) (for models with Torque-Control slipper clutch)
4686 Spur gear, 86-tooth (48-pitch) (for models with Torque-Control slipper clutch)
4690 Spur gear, 90-tooth (48-pitch) (for models with Torque-Control slipper clutch)

Steering Components

2728 Ball bearings (5x8x2.5mm) (2)
2545 Bellcrank bushings (plastic) (5x8x2.5mm) (4)
5347 Rod ends, Revo® (large) with hollow balls (12)
3744 Servo saver w/adapters
3742 Shoulder screws, steering bellcranks (3x30mm cap-head machine) (2)/ draglink shoulder screws (chrome) (2)
3743 Steering bellcranks (l&r)/ draglink
3743A Steering bellcranks, drag link (blue-anodized 6061-T6 aluminum)/ 5x8mm ball bearings (4)/ hardware (assembled)
3743G Steering bellcranks, drag link (green-anodized 6061-T6 aluminum)/ 5x8mm ball bearings (4)/ hardware (assembled)
3743P Steering bellcranks, drag link (pink-anodized 6061-T6 aluminum)/ 5x8mm ball bearings (4)/ hardware (assembled)
3743X Steering bellcranks, drag link (red-anodized 6061-T6 aluminum)/ 5x8mm ball bearings (4)/ hardware (assembled)
6845X Steering bellcranks/ servo saver/ servo saver spring/ servo spring retainer/servo horn, steering
2445 Turnbuckles, toe link, 55mm (75mm center to center) (2) (assembled with rod ends and hollow balls)

Suspension Linkage

5525R Rod ends, heavy duty (Jato®/Slayer) (8)
5347 Rod ends, Revo® (large) with hollow balls (12)
3744 Servo saver w/adapters
2637 Suspension pins, 31.5mm, chrome (2) w/ E-clips (4) (front suspension arm to caster block)
2640 Suspension pins, 44mm (2) w/ e-clips
3640 Suspension screw pin set, steel (hex drive) (requires part #2640 for a complete suspension pin set) (Bandit, Rustler®, Stampede®)
2443 Turnbuckles, camber link, 36mm (56mm center to center) (rear) (assembled with rod ends and hollow balls) (1 left, 1 right)
2444 Turnbuckles, camber link, 47mm (67mm center to center) (front) (assembled with rod ends and hollow balls) (1 left, 1 right)
2445 Turnbuckles, toe link, 55mm (75mm center to center) (2) (assembled with rod ends and hollow balls)

Team Traxxas Items

2514 Decal sheet, racing sponsors
6160X DVD, Maxx® Power! Full Throttle Action (sleeve)
9950 Official Team Traxxas® racing decal set (flag logo/ 6-color)
9909 Traxxas® racing banner, red & black (3x7 feet)

Tires & Wheels

3647 Nuts, 4mm flanged nylon locking (steel, serrated) (8)
1985 PTFE-coated washers, 5x8x0.5mm (20) (use with ball bearings)
1647 Silicone grease
2754 Stub axle pins (4)
2470A Tires & wheels, assembled (Tracer 2.2" black chrome wheels, Alias 2.2" tires) (2) (Bandit rear, medium compound with foam inserts) (TSM rated)
2471A Tires & wheels, assembled (Tracer 2.2" black chrome wheels, Alias ribbed 2.2" tires) (2) (Bandit front, medium compound w/ foam inserts)
2479A Tires & wheels, assembled (Tracer 2.2" black chrome wheels, Anaconda® 2.2" tires with foam inserts) (2) (Bandit front)
2478A Tires & wheels, assembled (Tracer 2.2" black chrome wheels, Anaconda® 2.2" tires with foam inserts) (2) (Bandit rear)

BANDIT VXL® (24076-4)

2470R	**Tires & wheels, assembled (Tracer 2.2" chrome wheels, Alias 2.2" tires) (2) (Bandit rear, soft compound with foam inserts)**
2471R	**Tires & wheels, assembled (Tracer 2.2" chrome wheels, Alias ribbed 2.2" tires) (2) (Bandit front, soft compound w/ foam inserts)**
2479R	**Tires & wheels, assembled (Tracer 2.2" chrome wheels, Anaconda® 2.2" tires with foam inserts) (2) (Bandit front)**
2478R	**Tires & wheels, assembled (Tracer 2.2" chrome wheels, Anaconda® 2.2" tires with foam inserts) (2) (Bandit rear)**
4740	**Tires, 2.1" Pro-Trax ribbed (front) (2)**
1771	**Tires, 2.1" spiked (front) (2)**
1770	**Tires, 2.15 spiked (rear) (2)**
2470	**Tires, Alias® 2.2" (rear) (2)/ foam inserts (Bandit) (soft compound)**
2471	**Tires, Alias® ribbed 2.2" (wide, front) (2)/ foam inserts (Bandit) (soft compound)**
2478	**Tires, Anaconda® 2.2" (rear) (2)/ foam inserts (Bandit) (soft compound)**
2479	**Tires, Anaconda® 2.2" (wide, front) (2)/foam inserts (Bandit) (soft compound)**
3471	**Tires, street slicks (front) (2)**
3470	**Tires, street slicks (rear) (2)**
2475	**Wheels, front (2)**
2474	**Wheels, rear (2)**
2473A	Wheels, Tracer 2.2" (black chrome) (2) (Bandit front)
2472A	Wheels, Tracer 2.2" (black chrome) (2) (Bandit rear)
2473	**Wheels, Tracer 2.2" (chrome) (2) (Bandit front)**
2472	**Wheels, Tracer 2.2" (chrome) (2) (Bandit rear)**

Transmission Components

1552	**Backplate screws (3x8mm cap-head machine) (6)/washers (6)/ wrench**
4607	**Ball bearings (5x11x4mm) (8)**
5116	Ball bearings, blue rubber sealed (5x11x4mm) (2)
3792	Cover, gear/ rubber gear cover plug/ 3x6 RM (2) (Stampede/Rustler/Bandit)
5478	Flat wrench, 8mm (blue-anodized aluminum)
3790	Gear adapter, fixed
3691	**Gearbox halves (l&r) (black) w/ idler gear shaft**
3691A	Gearbox halves (l&r) (grey) w/ idler gear shaft
5148	Grease, white lithium
3696	Idler gear, steel (30-tooth)
3793	Input shaft (slipper shaft) / spring pin
2381X	Main diff with steel ring gear/ side cover plate/ screws (Bandit, Stampede®, Rustler®)
2382	Planet gears (4)/ planet shafts (4)/ sun gears (2)/sun gear alignment shaft (1) all hardened steel
2388X	Planetary gear differential with steel ring gear (complete) (fits Bandit, Stampede®, Rustler®)
3931	Screws, 3x8mm flat-head machine (hex drive) (6)
3185X	Screws, 3x8mm washerhead machine (large head for motor mount) (6)
1647	Silicone grease
5556	Slipper pressure plate & hub (aluminum alloy)
3195	Top drive gear, steel (22-tooth)

Traxxas Tools

3433X	**Body reamer (aluminum handle)**
3433	**Body reamer (plastic handle)**
3436	**Cap, body reamer**
3432	**Scissors, curved tip**
3431	**Scissors, straight tip**
8712	**Speed Bit Essentials Set, hex and nut driver, 7-piece, includes premium handle (medium), travel pouch, hex drivers (straight: 1.5mm, 2.0mm, 2.5mm) and nut drivers (5.0mm, 5.5mm, 7.0mm, and 8.0mm), 1/4" drive**
8721	**Speed bit handle, medium (one piece)**
8720	**Speed bit handle, premium, large (rubber overmold)**
8722	**Speed bit handle, premium, medium (rubber overmold)**
8710	**Speed Bit Master Set, hex and nut driver, 13-piece, includes premium handle (medium), travel pouch, hex drivers (straight: 1.5mm, 2.0mm, 2.5mm, 3.0mm), (ball-end: 2.0mm, 2.5mm, 3.0mm), and nut drivers (4.00mm, 4.50mm, 5.00mm, 5.50mm, 7.00mm, 8.00mm),**
8711	**Speed Bit Master Set, hex driver, 7-piece straight and ball end, includes premium handle (medium), travel pouch, hex drivers (straight: 1.5mm, 2.0mm, 2.5mm, 3.0mm) (ball end: 2.0mm, 2.5mm, 3.0mm), 1/4" drive**
8719	**Speed Bit Master Set, nut driver, 6-piece, includes premium handle (medium), travel pouch, and nut drivers (4.0mm, 4.5mm, 5.0mm, 5.5mm, 7.0mm, 8.0mm), 1/4" drive**
8716	**Speed Bit Set, hex driver, 2-piece ball-end (2.0mm, 2.5mm), 1/4" drive**
8716X	**Speed Bit Set, hex driver, 3-piece ball-end (2.0mm, 2.5mm, 3.0mm), 1/4" drive**
8715	**Speed Bit Set, hex driver, 3-piece straight (1.5mm, 2.0mm, 2.5mm), 1/4" drive**
8715X	**Speed Bit Set, hex driver, 4-piece straight (1.5mm, 2.0mm, 2.5mm, 3.0mm), 1/4" drive**
3415	**Tool set with pouch (includes 1.5mm, 2.0mm, 2.5mm, 3.0mm, 3.5mm, 4mm drivers/ 4mm, 5mm, 5.5mm, 7mm and 8mm nut drivers/ 2mm, 4mm, and 5mm slotted screwdrivers/ #00 Phillips, #0 Phillips, and #1 Phillips screwdrivers/ 4mm and 8mm wrench/ driver handle**

Turnbuckles & Threaded Rods

5525R	Rod ends, heavy duty (Jato®/Slayer) (8)
5347	Rod ends, Revo® (large) with hollow balls (12)
2443	Turnbuckles, camber link, 36mm (56mm center to center) (rear) (assembled with rod ends and hollow balls) (1 left, 1 right)
2444	Turnbuckles, camber link, 47mm (67mm center to center) (front) (assembled with rod ends and hollow balls) (1 left, 1 right)
2445	Turnbuckles, toe link, 55mm (75mm center to center) (2) (assembled with rod ends and hollow balls)

If you have questions or need technical assistance, call Traxxas at:

1-888-TRAXXAS

(1-888-872-9927) (U.S. residents only)

For orders, calls outside the U.S., and other information, call 972-549-3000, or fax to 972-549-3011 e-mail Traxxas at support@Traxxas.com

TRAXXAS.COM

REV. 201002 1237

STAMPEDE®

MODEL 36054-1/36054-4

ELECTRIC POWERED
2WD MONSTER TRUCK



30+ mph

HIGH-CAPACITY 3000 MAH 7-CELL BATTERY AND 4-AMP DC FAST CHARGER

WATERPROOF XL-5 ESC AND TITAN 12T MOTOR

TQ 2.4GHz TRANSMITTER

MONSTER ROCK-CRUSHING TORQUE

The best-selling Stampede is one monster truck that doesn't know when to quit! Crushing cars, catching big air, and popping wheelies have never been this much fun. No other truck available offers Stampede's unique style, capability, and legendary ruggedness. When you combine the mod-motor horsepower with the tall, drive-over-anything ground clearance, ultra-tough suspension, and easy operation, Stampede will quickly become your favorite for all kinds of monster truck action. The Titan 12-turn 550 modified motor and racing-style Magnum 272™ transmission propel the Stampede to over 30mph. The integrated cooling fan in the Titan 12T pulls air through the motor keeping it cool. Stampede is the first name in high performance monster trucks.

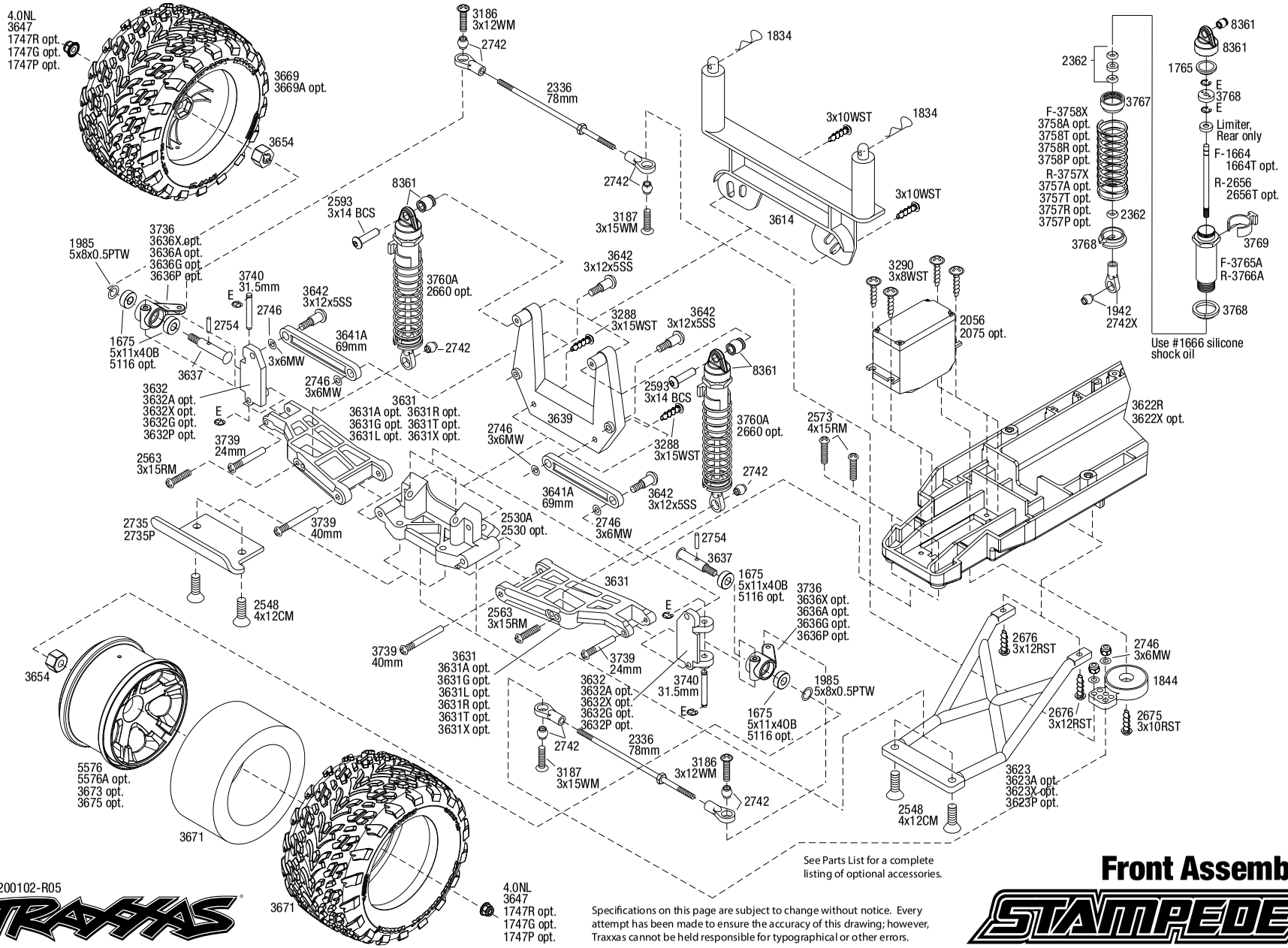

See Parts List for a complete listing of optional accessories.

REV 200102-R05

TRAXXAS

Specifications on this page are subject to change without notice. Every attempt has been made to ensure the accuracy of this drawing; however, Traxxas cannot be held responsible for typographical or other errors.

Front Assembly

STAMPEDE

Questions? **Call toll-free, 1-888-TRAXXAS**

STAMPEDE® (36054-1/36054-4)

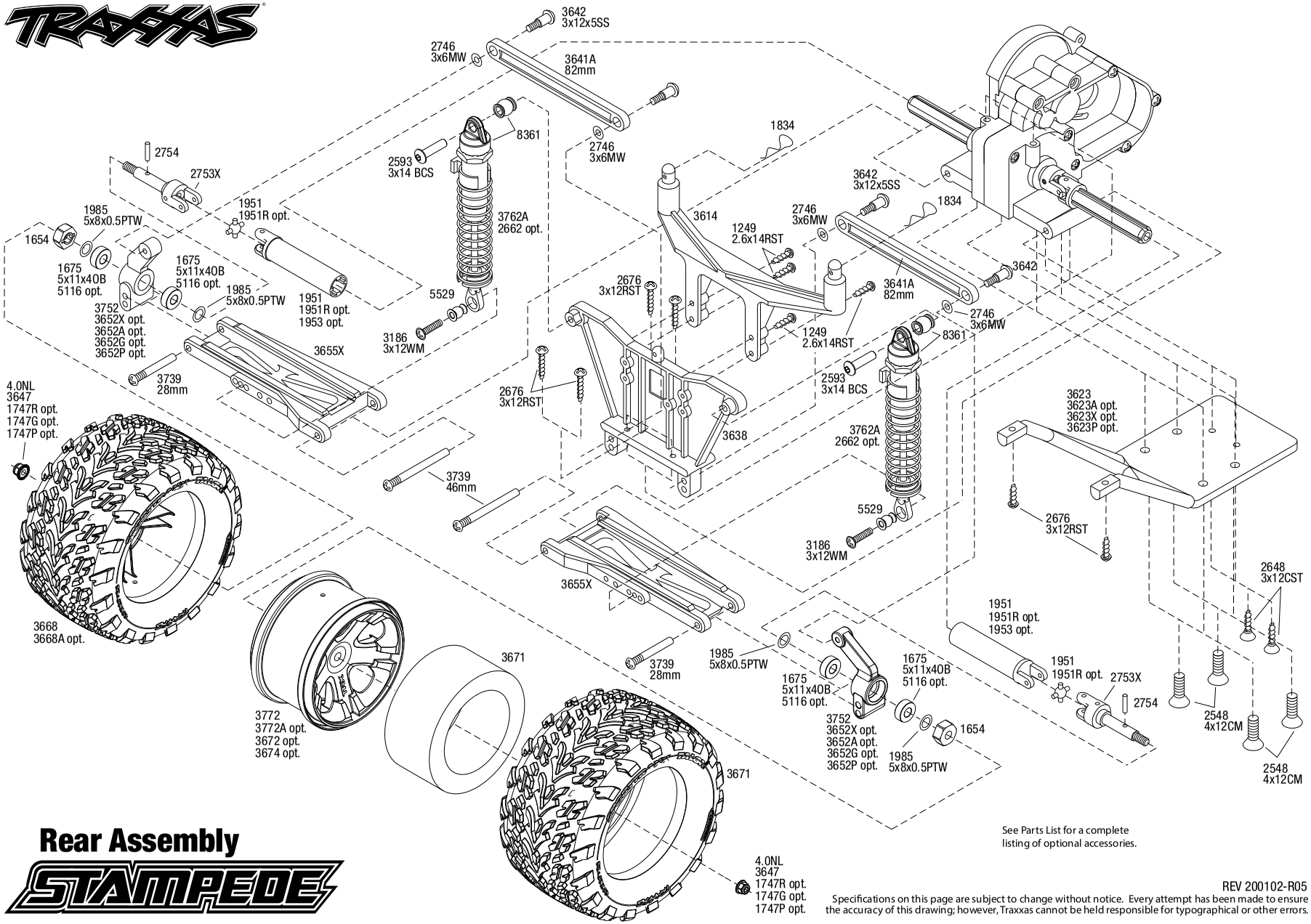

Rear Assembly

STAMPEDE

See Parts List for a complete listing of optional accessories.

REV 200102-R05

Specifications on this page are subject to change without notice. Every attempt has been made to ensure the accuracy of this drawing; however, Traxxas cannot be held responsible for typographical or other errors.

Questions? Call toll-free, 1-888-TRAXXAS

STAMPEDE

Transmission Assembly

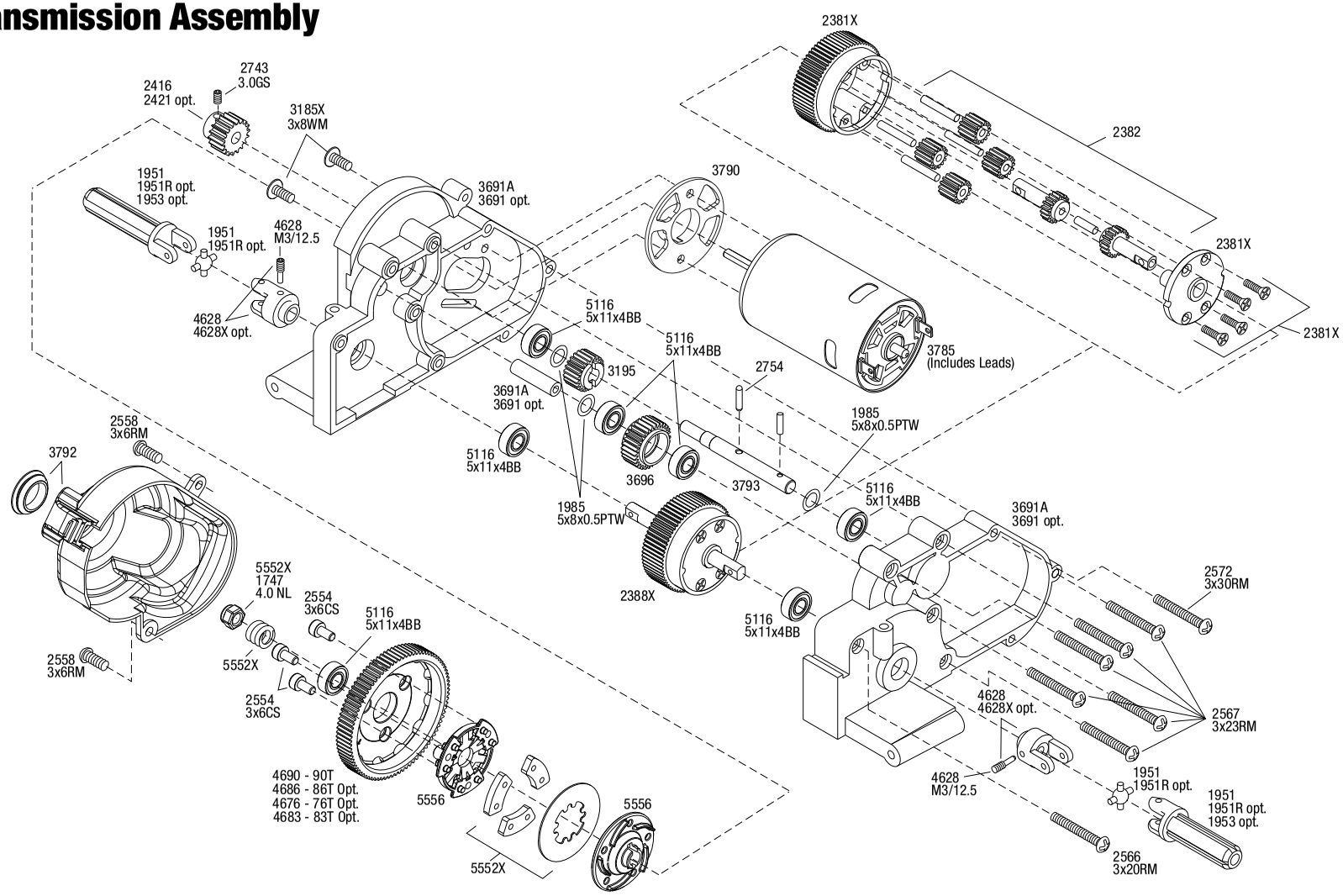

REV 200102-R05

TRAXXAS

See Parts List for a complete listing of optional accessories.

Specifications on this page are subject to change without notice. Every attempt has been made to ensure the accuracy of this drawing; however, Traxxas cannot be held responsible for typographical or other errors.

PARTS SHOWN IN BOLD ARE OPTIONAL ACCESSORIES.

Part categories and individual part listings are arranged alphabetically.

Bearings & Bushings

4607 **Ball bearings (5x11x4mm) (8)**
5116 Ball bearings, blue rubber sealed (5x11x4mm) (2)
1675 Bushings, self-lubricating (5x11x4mm) (14)
1985 PTFE-coated washers, 5x8x0.5mm (20) (use with ball bearings)

Body & Accessories

1926 **Antenna caps, vinyl (2)/ antenna spool**
1726 Antenna, tube (1)/ vinyl antenna cap (1)/ wire retainer (1)
1834 Body clips (12) (standard size)
3934 **Body clips, heavy duty (12)**
1914R **Body mount, front & rear (black)/ body posts, 52mm (2), 38mm (2), 25mm (2), 6.5mm (2)/ body post extensions (4)/ hardware**
3614 Body mounts (front & rear)
3619 **Body mounts, front & rear/ body mount posts, front & rear (adjustable)/ 2.5x18mm screw pins (4)**
1815 Body washers (8)
6716 **Body washers, foam, 2mm (2)/ 3mm (2)/ 4mm (4)**
3714 **Body, Rustler® (clear, requires painting)/window, lights decal sheet/ wing and aluminum hardware**
3617 **Body, Stampede® (clear, requires painting) (requires #3614 to mount)**
3649 **Body, Stampede®, Hawaiian graphics (painted, decals applied)**
3648 **Body, Stampede®, Rock n' Roll (painted, decals applied)**
2514 **Decal sheet, racing sponsors**
3616 Decal sheets, Stampede®
9950 **Official Team Traxxas® racing decal set (flag logo/ 6-color)**
3931 Screws, 3x8mm flat-head machine (hex drive) (6)
5185 **Tires, rubber (2) (fits Traxxas® wheelie bar wheels)**
4974 **Wheelie bar arm (1)/ connector (1)/ 3x12 SS (hex drive) (4)**
3677A **Wheelie bar mount (1) / hardware (green)**
3677P **Wheelie bar mount (1) / hardware (pink)**
3677 **Wheelie bar mount (1)/ hardware (black)**
3677X **Wheelie bar mount (1)/ hardware (blue)**
3678 **Wheelie bar, assembled (black) (fits Slash, Bandit, Rustler®, Stampede® series)**
3678X **Wheelie bar, assembled (blue) (fits Slash, Bandit, Rustler®, Stampede® series)**
3678A **Wheelie bar, assembled (green) (fits Slash, Bandit, Rustler®, Stampede® series)**
3678P **Wheelie bar, assembled (pink) (fits Slash, Bandit, Rustler®, Stampede® series)**
4976 **Wheels (4)/ axles (2) (for T-Maxx®/E-Maxx wheelie bar)**
5186A **Wheels, aluminum (blue-anodized) (2)/ 5x8mm ball bearings (4)/ axles (2)/ rubber tires (2)**
5186 **Wheels, aluminum (red-anodized) (2)/ 5x8mm ball bearings (4)/ axles (2)/ rubber tires (2)**

Chassis & Attachments

3725X **Battery expansion kit (allows for installation of taller multi-cell battery packs) (Rustler, Bandit, Stampede) (requires part #3627X)**
3627X Battery hold-down (grey) (1) / receiver hold-down (grey) (1) / metal posts (2)/ spacers (2)/ body clips (2)/ servo tape/ adhesive foam pad
3628 Box, receiver (sealed)/ foam pad/2.5x8mm CS (4)/ 3x10mm CS (2)
2735 Bumper (front)
2735P **Bumper (front) (pink)**
3622X **Main chassis (black) (164mm long battery compartment) (fits both flat and hump style battery packs) (use only with #3626R ESC mounting plate)**
3622R Main chassis (grey) (164mm long battery compartment) (fits both flat and hump style battery packs) (use only with #3626R ESC mounting plate)
3626R Mounting plate, electronic speed control/receiver box (for installation of XL-5/VXL and waterproof receiver box into Stampede®)
3629 Seal kit, receiver box (includes o-ring, seals, and silicone grease)
3623 Skid plates, front & rear (black)
3623X **Skid plates, front & rear (blue)**
3623A **Skid plates, front & rear (green)**
3623P **Skid plates, front & rear (pink)**
5185 **Tires, rubber (2) (fits Traxxas® wheelie bar wheels)**
4974 **Wheelie bar arm (1)/ connector (1)/ 3x12 SS (hex drive) (4)**
3677A **Wheelie bar mount (1) / hardware (green)**
3677P **Wheelie bar mount (1) / hardware (pink)**
3677 **Wheelie bar mount (1)/ hardware (black)**
3677X **Wheelie bar mount (1)/ hardware (blue)**
3678 **Wheelie bar, assembled (black) (fits Slash, Bandit, Rustler®, Stampede® series)**
3678X **Wheelie bar, assembled (blue) (fits Slash, Bandit, Rustler®, Stampede® series)**
3678A **Wheelie bar, assembled (green) (fits Slash, Bandit, Rustler®, Stampede® series)**
3678P **Wheelie bar, assembled (pink) (fits Slash, Bandit, Rustler®, Stampede® series)**
4976 **Wheels (4)/ axles (2) (for T-Maxx®/E-Maxx wheelie bar)**
5186A **Wheels, aluminum (blue-anodized) (2)/ 5x8mm ball bearings (4)/ axles (2)/ rubber tires (2)**
5186 **Wheels, aluminum (red-anodized) (2)/ 5x8mm ball bearings (4)/ axles (2)/ rubber tires (2)**

Differential Components

2381X Main diff with steel ring gear/ side cover plate/ screws (Bandit, Stampede®, Rustler®)
2382 Planet gears (4)/ planet shafts (4)/ sun gears (2)/sun gear alignment shaft (1) all hardened steel
2388X Planetary gear differential with steel ring gear (complete) (fits Bandit, Stampede®, Rustler®)
5169 Screws, 2.6x8mm countersunk machine (6)
1647 Silicone grease

Driveline Components

5116 **Ball bearings, blue rubber sealed (5x11x4mm) (2)**
4628R Differential output yokes, black (2)/ 3x5mm countersunk screws (2)/ screw pin (2)
4628X **Differential output yokes, hardened steel (w/ U-joints) (2)**
6828X **Differential output yokes, heavy duty (2)/ screw pin (2)**
1951R **Driveshafts, rear, steel-spline constant-velocity (complete assembly) (2) (fits 2WD Rustler/Stampede)**
1953 **Half shaft pro-pack (internal-splined (6)/ external-splined (6) (plastic shafts only)**
6752 **Half shaft, external splined (steel-spline constant-velocity) (1) (fits 2WD Rustler/Stampede)**
6751 **Half shaft, internal splined (steel-spline constant-velocity) (1)**
6850X **Half shafts, heavy duty (external splined (2)/ internal splined (2))/ metal u-joints (4)**
1951 Half shafts, long truck (external-splined (2) & internal-splined (2)/ metal U-joints (4)
6757 **Rebuild kit, steel-splined constant-velocity driveshafts (includes pins, dustboots, lube, and hardware)**
3752 Stub axle carriers (2) (requires 5x11x4mm bushings or bearings)
3652A **Stub axle carriers, Rustler®/Stampede®/Bandit (2), 6061-T6 aluminum (blue-anodized)/ 5x11mm ball bearings (4)**
3652G **Stub axle carriers, Rustler®/Stampede®/Bandit (2), 6061-T6 aluminum (green-anodized)/ 5x11mm ball bearings (4)**
3652P **Stub axle carriers, Rustler®/Stampede®/Bandit (2), 6061-T6 aluminum (pink-anodized)/ 5x11mm ball bearings (4)**
3652P **Stub axle carriers, Rustler®/Stampede®/Bandit (2), 6061-T6 aluminum (pink-anodized)/ 5x11mm ball bearings (4)**
3652X **Stub axle carriers, Rustler®/Stampede®/Bandit (2), 6061-T6 aluminum (red-anodized)/ 5x11mm ball bearings (4)**
2754 Stub axle pins (4)
6753 **Stub axle, rear, 5mm (steel-splined constant-velocity driveshaft) (1)**
2753X Stub axles, rear (2)
6853X **Stub axles, rear, heavy duty (2)/pins (2)**

Front Suspension & Steering

3637 Axles (front) (2)
2728 **Ball bearings (5x8x2.5mm) (2)**
5116 **Ball bearings, blue rubber sealed (5x11x4mm) (2)**
2545 Bellcrank bushings (plastic) (5x8x2.5mm) (4)
2530 **Bulkhead (front) (black)**
2530A Bulkhead (front) (grey)
1675 Bushings, self-lubricating (5x11x4mm) (14)
3632 Caster blocks (l&r) (30-degree)
3632A **Caster blocks, 30-degree, blue-anodized 6061-T6 aluminum (left & right)/ suspension screw pin (2)**
3632G **Caster blocks, 30-degree, green-anodized 6061-T6 aluminum (left & right)/ suspension screw pin (2)**
3632P **Caster blocks, 30-degree, pink-anodized 6061-T6 aluminum (left & right)/ suspension screw pin (2)**
3632X **Caster blocks, 30-degree, red-anodized 6061-T6 aluminum (left & right)/ suspension screw pin (2)**
1942 Rod ends (16 long & 4 short)/ hollow ball connectors (18)/ ball screws (2)

STAMPEDE® (36054-1/36054-4)

5525R	**Rod ends, heavy duty (Jato®/Slayer) (8)**
2742	Rod ends, long (6)/ hollow ball connectors (6)
5347	**Rod ends, Revo® (large) with hollow balls (12)**
2742X	Rod ends, short (6)/ hollow balls (6)
1844	Servo saver
3639	Shock tower (front)
3736	Steering blocks, left & right (2) (requires 5x11x4mm bushings or bearings)
3636A	**Steering blocks, Rustler®/Stampede®/Bandit (2), 6061-T6 aluminum (blue-anodized)/ 5x11mm ball bearings (4)**
3636G	**Steering blocks, Rustler®/Stampede®/Bandit (2), 6061-T6 aluminum (green-anodized)/ 5x11mm ball bearings (4)**
3636P	**Steering blocks, Rustler®/Stampede®/Bandit (2), 6061-T6 aluminum (pink-anodized)/ 5x11mm ball bearings (4)**
3636X	**Steering blocks, Rustler®/Stampede®/Bandit (2), 6061-T6 aluminum (red-anodized)/ 5x11mm ball bearings (4)**
3631	Suspension arms (front) (2)
3631X	**Suspension arms, black, front, heavy duty (2)**
3631A	**Suspension arms, blue, front, heavy duty (2)**
3631G	**Suspension arms, green, front, heavy duty (2)**
3631T	**Suspension arms, orange, front, heavy duty (2)**
3631R	**Suspension arms, red, front, heavy duty (2)**
3631L	**Suspension arms, white, front, heavy duty (2)**
3740	**Suspension pins, 2.5x29mm (king pins) w/ e-clips (2) (strengthens caster blocks)**
2640	**Suspension pins, 44mm (2) w/ E-clips (Use with tie bar to strengthen front bulkhead)**
3640	**Suspension screw pin set, steel (hex drive) (requires part #2640 for a complete suspension pin set) (Bandit, Rustler®, Stampede®)**
2537	Threaded rods (20/25/44mm 1 ea.)/ (1) 12mm set screw
2532	**Tie bar, fiberglass (requires suspension pins, part# 2640)**
3737A	**Turnbuckle, aluminum (blue-anodized), camber link, front, 39mm (1)(assembled w/rod ends)/ hollow balls (2) (See part 3741A for complete camber link set)**
3737	**Turnbuckle, aluminum (red-anodized), camber link, front, 39mm (1) (assembled w/rod ends)/ hollow balls (2)(See part 3741X for complete camber link set)**
3139	Turnbuckles (62mm) (front tie rods) (2)
3741A	**Turnbuckles, aluminum (blue-anodized), camber links, front, 39mm (2), rear, 49mm (2) (assembled w/rod ends & hollow balls)/ wrench**
2336A	**Turnbuckles, aluminum (blue-anodized), toe links, 61mm (2) (assembled w/ rod ends & hollow balls) (fits Stampede®) (requires 5mm aluminum wrench #5477)**
3741X	**Turnbuckles, aluminum (red-anodized), camber links, front, 39mm (2), rear, 49mm (2) (assembled w/ rod ends & hollow balls)/wrench**
2336X	**Turnbuckles, aluminum (red-anodized), toe links, 61mm (2) (assembled with rod ends & hollow balls) (fits Stampede®) (requires 5mm aluminum wrench #5477)**
3644	**Turnbuckles, camber link, 39mm (69mm center to center) (assembled with rod ends and hollow balls) (1 left, 1 right)**
3745	**Turnbuckles, toe link, 59mm (78mm center to center) (2) (assembled with rod ends and hollow balls)**
3645	**Turnbuckles, toe link, 61mm (96mm center to center) (2) (assembled with rod ends and hollow balls) (fits Stampede®)**

Hardware

1926	**Antenna caps, vinyl (2)/ antenna spool**
1726	Antenna, tube (1)/ vinyl antenna cap (1)/ wire retainer (1)
3642	**Shoulder screws, Ultra Shocks (3x12) (6)**
1552	**Motor screws (3x8mm hex cap) (6)/washers (6)/ wrench**
1834	Body clips (12) (standard size)
3934	**Body clips, heavy duty (12)**
1589	Double-sided adhesive tape (25mm x 25mm) (2)
2745	Nuts, 3mm nylon locking (12)
3647	Nuts, 4mm flanged nylon locking (steel, serrated) (8)
1747	Nuts, 4mm nylon locking (10)
1747R	**Nuts, aluminum, flanged, serrated (4mm) (blue-anodized) (4)**
1747G	**Nuts, aluminum, flanged, serrated (4mm) (green-anodized) (4)**
1747P	**Nuts, aluminum, flanged, serrated (4mm) (pink-anodized) (4)**
1747P	**Nuts, aluminum, flanged, serrated (4mm) (pink-anodized) (4)**
1747A	**Nuts, aluminum, flanged, serrated (4mm) (red-anodized) (4)**
1985	PTFE-coated washers, 5x8x0.5mm (20) (use with ball bearings)
1942	Rod ends (16 long & 4 short)/ hollow ball connectors (18)/ ball screws (2)
5525R	**Rod ends, heavy duty (Jato®/Slayer) (8)**
5347	**Rod ends, Revo® (large) with hollow balls (12)**
2742X	Rod ends, short (6)/ hollow balls (6)
3739	Screw pin set (Rustler®/ Bandit/ Stampede®)
3229	Screws, 2.5x10mm cap-head machine (hex drive) (6)
3965	Screws, 2.5x8mm cap-head machine (6)
2587	Screws, 3x10mm cap-head machine (6) (no washer)
2675	Screws, 3x10mm roundhead self-tapping (6)
2648	Screws, 3x12mm countersunk self-tapping (6)
3186	Screws, 3x12mm washerhead machine (6)
3286	Screws, 3x12mm washerhead self-tapping (6)
2563	Screws, 3x15mm roundhead machine (6)
3187	Screws, 3x15mm washerhead machine (6)
3288	Screws, 3x15mm washerhead self-tapping (6)
2566	Screws, 3x20mm roundhead machine (6)
2567	Screws, 3x23mm roundhead machine (6)
2572	Screws, 3x30mm roundhead machine (6)
2554	Screws, 3x6mm cap-head machine (hex drive) (6)
2558	Screws, 3x6mm roundhead machine (6)
3185X	Screws, 3x8mm washerhead machine (large head for motor mount) (6)
3290	Screws, 3x8mm washerhead self-tapping (6)
2548	Screws, 4x12mm countersunk machine (100-degree) (6)
2546	Screws, 4x15mm countersunk machine (hex drive) (6)
2573	Screws, 4x15mm roundhead machine (6)
5529	Shim set, 3x7x1mm (2), 3x6x0.5mm (4), 3x7x2mm (2)/ hollow balls, captured (4)
2754	Stub axle pins (4)
3740	Suspension pins, 2.5x29mm (king pins) w/ e-clips (2) (strengthens caster blocks)
2746	**Washers, 3x6mm metal (12)**

Motors & Electronics

1552	**Motor screws (3x8mm hex cap) (6)/washers (6)/ wrench**
2260	**BEC assembly (complete)**
3790	Gear adapter, fixed
2072A	**Gear set (for 2070, 2075 servos)**
1275	**Motor, Stinger (20-turn, 540 size) (requires 19-tooth pinion with factory installed spur gear on models originally equipped with the Titan 12T)**
3785	Motor, Titan® 12T (12-Turn, 550 size)
3351R	**Motor, Velineon® 3500, brushless (assembled with 12-gauge wire and gold-plated bullet connectors)**
3626R	Mounting plate, electronic speed control/receiver box (for installation of XL-5/VXL and waterproof receiver box into Stampede®)
2074	Servo case/gaskets (for 2056 and 2075 waterproof servos)
2053	Servo gears (for 2055, 2056 servos)
2075R	**Servo, digital high-speed, metal gear (ball bearing), waterproof**
2075	**Servo, digital high-torque (ball bearing), waterproof**
2075X	**Servo, digital high-torque, metal gear (ball bearing), waterproof**
2056	Servo, high-torque, waterproof (blue case)
3350R	**Velineon® VXL-3s Brushless Power System, waterproof (includes VXL-3s waterproof ESC, Velineon 3500 motor, and speed control mounting plate (part #3725R))**
3355R	**Velineon® VXL-3s Electronic Speed Control, waterproof (brushless) (fwd/rev/brake)**
3018R	XL-5 Electronic Speed Control, waterproof (land version, low-voltage detection, fwd/rev/brake)

Radio System, Batteries & Chargers

2842X	**5000mAh 7.4v 2-Cell 25C LiPo Battery**
2843X	**5800mAh 7.4v 2-Cell 25C LiPo Battery**
2869X	**7600mAh 7.4v 2-Cell 25C LiPo Battery**
2976	**AC to DC converter, 40W**
2938X	**Adapter, Traxxas® iD® LiPo battery (adapts Traxxas iD batteries to separate balance ports)**
1726	Antenna, tube (1)/ vinyl antenna cap (1)/ wire retainer (1)
2943	**Battery charge indicators (green (4), blue (4), grey (4))**
6548	Battery door, transmitter (replacement for #6516, 6517, 6528, 6529, 6530 transmitters)
2914	**Battery, Power Cell AA Alkaline (4)**
2922X	**Battery, Power Cell, 3000mAh (NiMH, 6-C flat, 7.2V)**
2923X	**Battery, Power Cell, 3000mAh (NiMH, 7-C flat, 8.4V)**
2926X	**Battery, Power Cell, 3000mAh (NiMH, 7-C hump, 8.4V)**
2942X	**Battery, Series 3 Power Cell, 3300mAh (NiMH, 6-C flat, 7.2V)**
2940X	**Battery, Series 3 Power Cell, 3300mAh (NiMH, 7-C flat, 8.4V)**
2941X	**Battery, Series 3 Power Cell, 3300mAh (NiMH, 7-C hump, 8.4V)**
2952X	**Battery, Series 4 Power Cell, 4200mAh (NiMH, 6-C flat, 7.2V)**
2950X	**Battery, Series 4 Power Cell, 4200mAh (NiMH, 7-C flat, 8.4V)**
2951X	**Battery, Series 4 Power Cell, 4200mAh (NiMH, 7-C hump, 8.4V)**
2960X	**Battery, Series 5 Power Cell, 5000mAh (NiMH, 7-C flat, 8.4V)**
2961X	**Battery, Series 5 Power Cell, 5000mAh (NiMH, 7-C hump, 8.4V)**
2984	**Battery/charger completer pack (includes #2969 2-amp NiMH peak detecting AC charger (1), #2926X 3000mAh 8.4V 7-cell NiMH battery (1))**
2992	**Battery/charger completer pack (includes #2970 iD® charger (1), #2843X 5800mAh 7.4V 2-cell 25C LiPo battery (1))**
2260	**BEC assembly (complete)**
2975	**Charger, DC, 4 amp (6 - 7 cell, 7.2 - 8.4 volt, NiMH)**

2972	**Charger, EZ-Peak® Dual, 100W, NiMH/LiPo with iD® Auto Battery Identification**
2973	**Charger, EZ-Peak® Live Dual, 200W, NiMH/LiPo with iD® Auto Battery Identification**
2971	**Charger, EZ-Peak® Live, 100W, NiMH/LiPo with iD® Auto Battery Identification**
2970	**Charger, EZ-Peak® Plus, 4 amp, NiMH/LiPo with iD® Auto Battery Identification**
6541	**Connector, power tap (with cable) (long)/ wire tie**
2978	**Fuse, charger, 5A (2) (for #2974, 2975, 2977)**
2072A	**Gear set (for 2070, 2075 servos)**
2968X	**LiPo cell voltage checker/balancer (includes #2938X adapter for Traxxas® iD® batteries)**
2968	**LiPo cell voltage checker/balancer (requires #2938X adapter for Traxxas® iD® batteries)**
6535	**Mount, temperature sensor (electric motors)/ wire tie/ thermal pad**
6519	Receiver, micro, TQ 2.4GHz (3-channel)
6518	**Receiver, micro, TQi 2.4GHz with telemetry (5-channel)**
6526	**Sensor, auto-detectable, temperature**
6527	**Sensor, auto-detectable, voltage**
6522	**Sensor, RPM (short)/ 3x4mm BCS (2)**
6521	**Sensor, temperature and voltage (long)**
2074	Servo case/gaskets (for 2056 and 2075 waterproof servos)
2053	Servo gears (for 2055, 2056 servos)
2075R	**Servo, digital high-speed, metal gear (ball bearing), waterproof**
2075	**Servo, digital high-torque (ball bearing), waterproof**
2075X	**Servo, digital high-torque, metal gear (ball bearing), waterproof**
2056	Servo, high-torque, waterproof (blue case)
6553X	**Telemetry expander 2.0 and GPS module 2.0, TQi radio system**
6550X	**Telemetry expander 2.0, TQi radio system (for use only with #6551X GPS module)**
6551X	**Telemetry GPS module 2.0, TQi radio system (for use only with #6550X telemetry expander)**
6538	**Telemetry trigger magnet holders, spur gear/ magnet, 5x2mm (1)/ 3x8mm CCS (3)/ 3x10mm CCS (3)**
6540	**Telemetry trigger magnet, 5X2mm (1)**
6509R	**TQi 2.4 GHz High Output radio system, 2-channel, Traxxas Link™ enabled, TSM (2-ch transmitter, 5-ch micro receiver)**
6507R	**TQi 2.4 GHz High Output radio system, 4-channel with Traxxas Link™ Wireless Module, TSM (4-ch transmitter, 5-ch micro receiver)**
6516	Transmitter, TQ 2.4GHz, 2-channel (transmitter only)
6528	**Transmitter, TQi Traxxas Link™ enabled, 2.4GHz high output, 2-channel (transmitter only)**
6529	**Transmitter, TQi Traxxas Link™ enabled, 2.4GHz high output, 3-channel (transmitter only)**
6530	**Transmitter, TQi Traxxas Link™ enabled, 2.4GHz high output, 4-channel (transmitter only)**
6511	**Traxxas Link™ Wireless Module**
6537	**Wire retainers, gear cover/ 3x4mm BCS (2)**
3018R	XL-5 Electronic Speed Control, waterproof (land version, low-voltage detection, fwd/rev/brake)

Ready-To-Race Model

36054-4	Stampede®: 1/10 Scale Monster Truck with TQ 2.4GHz radio system

Rear Suspension

5116	**Ball bearings, blue rubber sealed (5x11x4mm) (2)**
1675	Bushings, self-lubricating (5x11x4mm) (14)
3739	Screw pin set (Rustler®/ Bandit/ Stampede®)
3638	Shock tower (rear)
3752	Stub axle carriers (2) (requires 5x11x4mm bushings and bearings)
3652A	**Stub axle carriers, Rustler®/Stampede®/Bandit (2), 6061-T6 aluminum (blue-anodized)/ 5x11mm ball bearings (4)**
3652G	**Stub axle carriers, Rustler®/Stampede®/Bandit (2), 6061-T6 aluminum (green-anodized)/ 5x11mm ball bearings (4)**
3652P	**Stub axle carriers, Rustler®/Stampede®/Bandit (2), 6061-T6 aluminum (pink-anodized)/ 5x11mm ball bearings (4)**
3652P	**Stub axle carriers, Rustler®/Stampede®/Bandit (2), 6061-T6 aluminum (pink-anodized)/ 5x11mm ball bearings (4)**
3652X	**Stub axle carriers, Rustler®/Stampede®/Bandit (2), 6061-T6 aluminum (red-anodized)/ 5x11mm ball bearings (4)**
2753X	Stub axles, rear (2)
3655P	**Suspension arms, blue, front/rear (left & right), heavy duty (2)**
3655R	**Suspension arms, front/rear (left & right), heavy duty (2)**
3655G	**Suspension arms, green, front/rear (left & right), heavy duty (2)**
3655X	Suspension arms, left & right
3655T	**Suspension arms, orange, front/rear (left & right), heavy duty (2)**
3655L	**Suspension arms, red, front/rear (left & right), heavy duty (2)**
3655A	**Suspension arms, white, front/rear (left & right), heavy duty (2)**
3640	**Suspension screw pin set, steel (hex drive) (requires part #2640 for a complete suspension pin set) (Bandit, Rustler®, Stampede®)**

Shocks (Pro-level Aluminum)

2664	**Big Bore shock cylinder (long) (1)**
2666	**Big Bore shock cylinder (XX-long) (1)**
5862	**Big Bore shocks (hard-anodized & PTFE-coated T6 aluminum) (assembled with TiN shafts and springs) (front & rear) (4)**
2660	**Big Bore shocks (long) (hard-anodized & PTFE-coated T6 aluminum) (assembled with TiN shafts) w/o springs (front) (2)**
2662	**Big Bore shocks (XX-long) (hard-anodized & PTFE-coated T6 aluminum) (assembled with TiN shafts) w/o springs (rear) (2)**
2669	**Piston head set (2-hole (2)/ 3-hole (2))/ shock mounting bushings & washers (2) (Big Bore Shocks)**
2362	**Rebuild kit, Ultra shocks (for 2 shocks)**
1942	Rod ends (16 long & 4 short)/ hollow ball connectors (18)/ ball screws (2)
2742X	Rod ends, short (6)/ hollow balls (6)
2667	**Shock caps, aluminum (Big Bore Shocks) (2)**
1664T	**Shock shafts, hardened steel, titanium nitride coated (long) (2)**
2656T	**Shock shafts, hardened steel, titanium nitride coated (xx-long) (2)**
1664	Shock shafts, steel, chrome finish (long) (2)
2656	Shock shafts, steel, chrome finish (xx-long) (2)
1765	Silicone diaphragms (4)
1666	Silicone shock oil (30 wt)
2668	**Spring retainers, upper & lower (2)/ spring pre-load spacers: 1mm (4)/ 1.5mm (2)/ 2mm (2)/ 4mm (2)/ 8mm (2) (Big Bore Shocks)**
5860	**Springs, front (white) (progressive rate) (2) (fits #5862 aluminum Big Bore shocks)**
5859	**Springs, rear (white) (progressive rate) (2) (fits #5862 aluminum Big Bore shocks)**

Shocks (Ultra Shocks)

3642	**Shoulder screws, Ultra Shocks (3x12) (6)**
3765A	Body, Ultra Shock(s) (long) (grey) (2)
3766A	Body, Ultra Shock(s) (XXL) (grey) (2)
2362	**Rebuild kit, Ultra shocks (for 2 shocks)**
1942	Rod ends (16 long & 4 short)/ hollow ball connectors (18)/ ball screws (2)
2742X	Rod ends, short (6)/ hollow balls (6)
3767	**Shock caps (2)/ shock bottoms (2)**
8361	Shock caps (black) (4) (assembled with hollow balls)
3767A	**Shock caps, aluminum (blue-anodized) (4) (fits all Ultra Shocks)**
3767G	**Shock caps, aluminum (green-anodized) (4) (fits all Ultra Shocks)**
3767P	**Shock caps, aluminum (pink-anodized) (4) (fits all Ultra Shocks)**
3767X	**Shock caps, aluminum (red-anodized) (4) (fits all Ultra Shocks)**
1664T	**Shock shafts, hardened steel, titanium nitride coated (long) (2)**
2656T	**Shock shafts, hardened steel, titanium nitride coated (xx-long) (2)**
1664	Shock shafts, steel, chrome finish (long) (2)
2656	Shock shafts, steel, chrome finish (xx-long) (2)
1765	Silicone diaphragms (4)
1666	Silicone shock oil (30 wt)
3769	Spring pre-load spacers: 1mm (4)/ 2mm (2)/ 4mm (2)/ 8mm (2)
3768	Spring retainers, upper & lower (2)/ piston head set (2-hole (2)/ 3-hole (2))
3758	**Springs, front (black) (2)**
3758T	**Springs, front (blue) (2)**
3758A	**Springs, front (green) (2)**
3758P	**Springs, front (pink) (2)**
3758X	Springs, front (white) (2)
3757	**Springs, rear (black) (2)**
3757T	**Springs, rear (blue) (2)**
3757A	**Springs, rear (green) (2)**
3757P	**Springs, rear (pink) (2)**
3757X	Springs, rear (white) (2)
4957	**Springs, red (for Ultra Shocks only) (2.5 rate) (f/r) (2)**
3760	**Ultra Shocks (black) (long) (complete w/ spring pre-load spacers & springs) (front) (2)**
3762	**Ultra Shocks (black) (xx-long) (complete w/ spring pre-load spacers & springs) (rear) (2)**
3760A	Ultra Shocks (grey) (long) (complete w/ spring pre-load spacers & springs) (2)
3762A	Ultra Shocks (grey) (xx-long) (complete w/ spring pre-load spacers & springs) (rear) (2)

STAMPEDE® (36054-1/36054-4)

Slipper Clutch Components

3793 Input shaft (slipper shaft) / spring pin
5552X Rebuild kit, slipper clutch (steel disc/ friction pads (3)/ spring (2)/ pin/ 4.0mm NL (1)/ 5.0mm NL (1))
2554 Screws, 3x6mm cap-head machine (hex drive) (6)
5556 Slipper pressure plate & hub (aluminum alloy)

Spur Gears & Pinion Gears

3790 Gear adapter, fixed
2416 Gear, 16-T pinion (48-pitch) / set screw
1918 Gear, 18-T pinion (48-pitch) / set screw
2419 Gear, 19-T pinion (48-pitch) / set screw
2421 Gear, 21-T pinion (48-pitch) / set screw
2423 Gear, 23-T pinion (48-pitch) / set screw
4725 Gear, pinion (25-tooth) (48-pitch) / set screw
4676 Spur gear, 76-tooth (48-pitch) (for models with Torque-Control slipper clutch)
4683 Spur gear, 83-tooth (48-pitch) (for models with Torque-Control slipper clutch)
4686 Spur gear, 86-tooth (48-pitch) (for models with Torque-Control slipper clutch)
4690 Spur gear, 90-tooth (48-pitch) (for models with Torque-Control slipper clutch)

Steering Components

2728 Ball bearings (5x8x2.5mm) (2)
2545 Bellcrank bushings (plastic) (5x8x2.5mm) (4)
2742 Rod ends, long (6)/ hollow ball connectors (6)
1844 Servo saver
2336 Turnbuckles, 78mm (2)
2336A Turnbuckles, aluminum (blue-anodized), toe links, 61mm (2) (assembled w/ rod ends & hollow balls) (fits Stampede®) (requires 5mm aluminum wrench #5477)
2336X Turnbuckles, aluminum (red-anodized), toe links, 61mm (2) (assembled with rod ends & hollow balls) (fits Stampede®) (requires 5mm aluminum wrench #5477)
3645 Turnbuckles, toe link, 61mm (96mm center to center) (2) (assembled with rod ends and hollow balls) (fits Stampede®)

Suspension Linkage

3642 Shoulder screws, Ultra Shocks (3x12) (6)
3641A Camber link set (plastic / non-adjustable) (front & rear) (grey)
3641 Camber link set (plastic/ non-adjustable) (front & rear) (black)
1942 Rod ends (16 long & 4 short)/ hollow ball connectors (18)/ ball screws (2)
2742 Rod ends, long (6)/ hollow ball connectors (6)
2742X Rod ends, short (6)/ hollow balls (6)
3739 Screw pin set (Rustler®/ Bandit/ Stampede®)
3740 Suspension pins, 2.5x29mm (king pins) w/ e-clips (2) (strengthens caster blocks)
2637 Suspension pins, 31.5mm, chrome (2) w/ E-clips (4)
2640 Suspension pins, 44mm (2) w/ E-clips (Use with tie bar to strengthen front bulkhead)
3640 Suspension screw pin set, steel (hex drive) (requires part #2640 for a complete suspension pin set) (Bandit, Rustler®, Stampede®)
3737A Turnbuckle, aluminum (blue-anodized), camber link, front, 39mm (1)(assembled w/rod ends)/ hollow balls (2) (See part 3741A for complete camber link set)
3738A Turnbuckle, aluminum (blue-anodized), camber link, rear, 49mm (1) (assembled w/ rod ends & hollow balls) (See part 3741A for complete camber link set)
3737 Turnbuckle, aluminum (red-anodized), camber link, front, 39mm (1) (assembled w/rod ends)/ hollow balls (2)(See part 3741X for complete camber link set)
3738 Turnbuckle, aluminum (red-anodized), camber link, rear, 49mm (1) (assembled with rod ends & hollow balls) (See part 3741X for complete camber link set)
1937 Turnbuckles (54mm) (2)/ 3x6x4mm aluminum spacers (rear camber links)
2336 Turnbuckles, 78mm (optional rear camber rods) (2)
3741A Turnbuckles, aluminum (blue-anodized), camber links, front, 39mm (2), rear, 49mm (2) (assembled w/rod ends & hollow balls)/ wrench
2336A Turnbuckles, aluminum (blue-anodized), toe links, 61mm (2) (assembled w/ rod ends & hollow balls) (fits Stampede®) (requires 5mm aluminum wrench #5477)
3741X Turnbuckles, aluminum (red-anodized), camber links, front, 39mm (2), rear, 49mm (2) (assembled w/ rod ends & hollow balls)/wrench
2336X Turnbuckles, aluminum (red-anodized), toe links, 61mm (2) (assembled with rod ends & hollow balls) (fits Stampede®) (requires 5mm aluminum wrench #5477)
3644 Turnbuckles, camber link, 39mm (69mm center to center) (assembled with rod ends and hollow balls) (1 left, 1 right)
3643 Turnbuckles, camber link, 49mm (82mm center to center) (assembled with rod ends and hollow balls) (1 left, 1 right)
3645 Turnbuckles, toe link, 61mm (96mm center to center) (2) (assembled with rod ends and hollow balls) (fits Stampede®)

Team Traxxas Items

2514 Decal sheet, racing sponsors
6160X DVD, Maxx® Power! Full Throttle Action (sleeve)
9950 Official Team Traxxas® racing decal set (flag logo/ 6-color)
9909 Traxxas® racing banner, red & black (3x7 feet)

Tires & Wheels

5116 Ball bearings, blue rubber sealed (5x11x4mm) (2)
1675 Bushings, self-lubricating (5x11x4mm) (14)
5854 Hub retainer, 17mm hubs, M4 X 0.7 (4) (use with #5853X, #6856X, #6469)
3647 Nuts, 4mm flanged nylon locking (steel, serrated) (8)
1747R Nuts, aluminum, flanged, serrated (4mm) (blue-anodized) (4)
1747G Nuts, aluminum, flanged, serrated (4mm) (green-anodized) (4)
1747P Nuts, aluminum, flanged, serrated (4mm) (pink-anodized) (4)
1747P Nuts, aluminum, flanged, serrated (4mm) (pink-anodized) (4)
1985 PTFE-coated washers, 5x8x0.5mm (20) (use with ball bearings)
1647 Silicone grease
2754 Stub axle pins (4)
3689 Tires & wheels, assembled, glued (2.8") (All-Star black chrome wheels, paddle tires, foam inserts) (2WD electric rear) (2) (TSM rated)
3668A Tires & wheels, assembled, glued (2.8") (All-Star black chrome wheels, Talon tires, foam inserts) (2WD electric rear) (2) (TSM rated)
3669A Tires & wheels, assembled, glued (2.8") (All-Star black chrome wheels, Talon tires, foam inserts) (nitro rear/ electric front) (2) (TSM rated)
3668 Tires & wheels, assembled, glued (2.8") (All-Star chrome wheels, Talon tires, foam inserts) (2WD electric rear) (2)
3669 Tires & wheels, assembled, glued (2.8") (All-Star chrome wheels, Talon tires, foam inserts) (nitro rear/ electric front) (2)
3773A Tires & wheels, assembled, glued (All Star black chrome wheels, Anaconda® tires, foam inserts) (2WD electric rear) (1 left, 1 right)
3773 Tires & wheels, assembled, glued (All Star chrome wheels, Anaconda® tires, foam inserts) (2WD electric rear) (1 left, 1 right)
3776A Tires & wheels, assembled, glued (All-Star black chrome wheels, Anaconda® tires, foam inserts) (nitro rear/ electric front) (1 left, 1 right)
5576R Tires & wheels, assembled, glued (All-Star chrome wheels, Anaconda® tires, foam inserts) (nitro rear/ electric front) (1 left, 1 right)
5578 Tires, Anaconda® 2.8" (2)/ foam inserts (2)
1970 Tires, low-profile spiked 2.2" (2)
4791 Tires, Pro-Trax mini-spiked 2.2" (rear) (2)
4790R Tires, Pro-Trax spiked 2.2" (soft-compound)(rear) (2)/ foam inserts (2)
1870 Tires, Sledgehammer terra-spiked (2)
3671 Tires, Talon 2.8" (2)/ foam inserts (2)
1654 Wheel hubs, hex (rear) (2)/ stub axle pins (2)
3654 Wheel hubs, hex (front) (tall offset) (2)/ axle pins (2.5x12mm) (2)
5853X Wheel hubs, splined, 17mm, short (2), long (2)/wheel nuts, splined, 17mm (4) (blue-anodized)/ hub retainer M4x0.7 (4)/axle pin (4)/wrench, 5mm
5353 Wheel nuts, splined, 17mm (blue-anodized) (4)
5480X Wheel wrench, splined, 17mm
3772A Wheels, All-Star 2.8" (black chrome) (2WD electric rear)
5576A Wheels, All-Star 2.8" (black chrome) (nitro rear/ electric front) (2)
3772 Wheels, All-Star 2.8" (chrome) (2WD electric rear)
5576 Wheels, All Star 2.8" (chrome) (2) (Rustler/Stampede front)
3673 Wheels, chrome (2.2") (front) (2)
3672 Wheels, chrome (2.2") (rear) (2)
3675 Wheels, dyeable nylon 2.2 (front) (2)
3674 Wheels, dyeable nylon 2.2 (rear) (2)
3774 Wheels, Twin-Spoke 2.8" (chrome) (2WD electric rear) (2)
5572 Wheels, Twin-Spoke 2.8" (chrome) (nitro rear/ electric front) (2)

Transmission Components

1552 Motor screws (3x8mm hex cap) (6)/washers (6)/ wrench
4607 Ball bearings (5x11x4mm) (8)
5116 Ball bearings, blue rubber sealed (5x11x4mm) (2)
3792 Cover, gear/ rubber gear cover plug/ 3x6 RM (2)
5478 Flat wrench, 8mm (blue-anodized aluminum)
3790 Gear adapter, fixed
3691 Gearbox halves (l&r) (black) w/ idler gear shaft
3691A Gearbox halves (l&r) (grey) w/ idler gear shaft

5148	Grease, white lithium
3696	Idler gear, steel (30-tooth)
3793	Input shaft (slipper shaft) / spring pin
2381X	Main diff with steel ring gear/ side cover plate/ screws (Bandit, Stampede®, Rustler®)
2382	Planet gears (4)/ planet shafts (4)/ sun gears (2)/sun gear alignment shaft (1) all hardened steel
2388X	Planetary gear differential with steel ring gear (complete) (fits Bandit, Stampede®, Rustler®)
5552X	Rebuild kit, slipper clutch (steel disc/ friction pads (3)/ spring (2)/ pin/ 4.0mm NL (1)/ 5.0mm NL (1))
2554	Screws, 3x6mm cap-head machine (hex drive) (6)
3185X	Screws, 3x8mm washerhead machine (large head for motor mount) (6)
1647	Silicone grease
5556	Slipper pressure plate & hub (aluminum alloy)
3195	Top drive gear, steel (22-tooth)

Traxxas Tools

3433X	**Body reamer (aluminum handle)**
3433	**Body reamer (plastic handle)**
3436	**Cap, body reamer**
3432	**Scissors, curved tip**
3431	**Scissors, straight tip**
8712	**Speed Bit Essentials Set, hex and nut driver, 7-piece, includes premium handle (medium), travel pouch, hex drivers (straight: 1.5mm, 2.0mm, 2.5mm) and nut drivers (5.0mm, 5.5mm, 7.0mm, and 8.0mm), 1/4" drive**
8721	**Speed bit handle, medium (one piece)**
8720	**Speed bit handle, premium, large (rubber overmold)**
8722	**Speed bit handle, premium, medium (rubber overmold)**
8710	**Speed Bit Master Set, hex and nut driver, 13-piece, includes premium handle (medium), travel pouch, hex drivers (straight: 1.5mm, 2.0mm, 2.5mm, 3.0mm), (ball-end: 2.0mm, 2.5mm, 3.0mm), and nut drivers (4.00mm, 4.50mm, 5.00mm, 5.50mm, 7.00mm, 8.00mm),**
8711	**Speed Bit Master Set, hex driver, 7-piece straight and ball end, includes premium handle (medium), travel pouch, hex drivers (straight: 1.5mm, 2.0mm, 2.5mm, 3.0mm) (ball end: 2.0mm, 2.5mm, 3.0mm), 1/4" drive**
8719	**Speed Bit Master Set, nut driver, 6-piece, includes premium handle (medium), travel pouch, and nut drivers (4.0mm, 4.5mm, 5.0mm, 5.5mm, 7.0mm, 8.0mm), 1/4" drive**
8716	**Speed Bit Set, hex driver, 2-piece ball-end (2.0mm, 2.5mm), 1/4" drive**
8716X	**Speed Bit Set, hex driver, 3-piece ball-end (2.0mm, 2.5mm, 3.0mm), 1/4" drive**
8715	**Speed Bit Set, hex driver, 3-piece straight (1.5mm, 2.0mm, 2.5mm), 1/4" drive**
8715X	**Speed Bit Set, hex driver, 4-piece straight (1.5mm, 2.0mm, 2.5mm, 3.0mm), 1/4" drive**
3415	**Tool set with pouch (includes 1.5mm, 2.0mm, 2.5mm, 3.0mm, 3.5mm, 4mm drivers/ 4mm, 5mm, 5.5mm, 7mm and 8mm nut drivers/ 2mm, 4mm, and 5mm slotted screwdrivers/ #00 Phillips, #0 Phillips, and #1 Phillips screwdrivers/ 4mm and 8mm wrench/ driver handle**

Turnbuckles & Threaded Rods

1942	Rod ends (16 long & 4 short)/ hollow ball connectors (18)/ ball screws (2)
5525R	**Rod ends, heavy duty (Jato®/Slayer) (8)**
2742	Rod ends, long (6)/ hollow ball connectors (6)
5347	**Rod ends, Revo® (large) with hollow balls (12)**
2742X	Rod ends, short (6)/ hollow balls (6)
3737A	**Turnbuckle, aluminum (blue-anodized), camber link, front, 39mm (1)(assembled w/rod ends)/ hollow balls (2) (See part 3741A for complete camber link set)**
3738A	**Turnbuckle, aluminum (blue-anodized), camber link, rear, 49mm (1) (assembled w/ rod ends & hollow balls) (See part 3741A for complete camber link set)**
3737	**Turnbuckle, aluminum (red-anodized), camber link, front, 39mm (1) (assembled w/rod ends)/ hollow balls (2)(See part 3741X for complete camber link set)**
3738	**Turnbuckle, aluminum (red-anodized), camber link, rear, 49mm (1) (assembled with rod ends & hollow balls) (See part 3741X for complete camber link set)**
1937	**Turnbuckles (54mm) (2)/ 3x6x4mm aluminum spacers (rear camber links)**
2336	Turnbuckles, 78mm (optional rear camber rods) (2)
3741A	**Turnbuckles, aluminum (blue-anodized), camber links, front, 39mm (2), rear, 49mm (2) (assembled w/rod ends & hollow balls)/ wrench**
2336A	**Turnbuckles, aluminum (blue-anodized), toe links, 61mm (2) (assembled w/ rod ends & hollow balls) (fits Stampede®) (requires 5mm aluminum wrench #5477)**
3741X	**Turnbuckles, aluminum (red-anodized), camber links, front, 39mm (2), rear, 49mm (2) (assembled w/ rod ends & hollow balls)/wrench**
2336X	**Turnbuckles, aluminum (red-anodized), toe links, 61mm (2) (assembled with rod ends & hollow balls) (fits Stampede®) (requires 5mm aluminum wrench #5477)**
3645	**Turnbuckles, toe link, 61mm (96mm center to center) (2) (assembled with rod ends and hollow balls) (fits Stampede®)**

If you have questions or need technical assistance, call Traxxas at:

1-888-TRAXXAS

(1-888-872-9927) (U.S. residents only)

For orders, calls outside the U.S., and other information, call 972-549-3000, or fax to 972-549-3011 e-mail Traxxas at support@Traxxas.com

TRAXXAS.COM

REV. 201002 1248

TSM
TRAXXAS STABILITY MANAGEMENT

STAMPEDE VXL BRUSHLESS

MODEL 36076-4

ELECTRIC POWERED 2WD
BRUSHLESS MONSTER TRUCK



65+ mph*

HIGH-CAPACITY 3000 MAH 7-CELL BATTERY AND 4-AMP DC FAST CHARGER

VELINEON BRUSHLESS POWER SYSTEM

TQi 2.4GHz TRANSMITTER COMPATIBLE WITH TRAXXAS LINK WIRELESS MODULE

THE WORLD'S MOST EXTREME MONSTER TRUCK!

Stampede` has always been the first name in monster truck fun, but with Velineon` brushless power and Traxxas Stability Management on board , the ground-pounding, high-speed wheelie popping antics are completely over-the-top. The included wheelie bar keeps the altitude in check, but with this kind of power, the wheelies don't stop just because your going over 50mph. If you have the nerve and skill, the fun is just getting started! With a top speed of over 65mph, the Velineon Brushless Power System is designed to let you explore the outer limits of what's possible with brushless. Chances are you've never experienced throttle response and speed like this in a monster truck. Tough and unbelievably fast, Stampede is the ultimate play truck that's always at hand, ready for instant R/C fun. No matter what kind of R/C racing you're into, a Stampede VXL belongs in your arsenal.

* With 3S LiPo (sold separately) and optional gearing

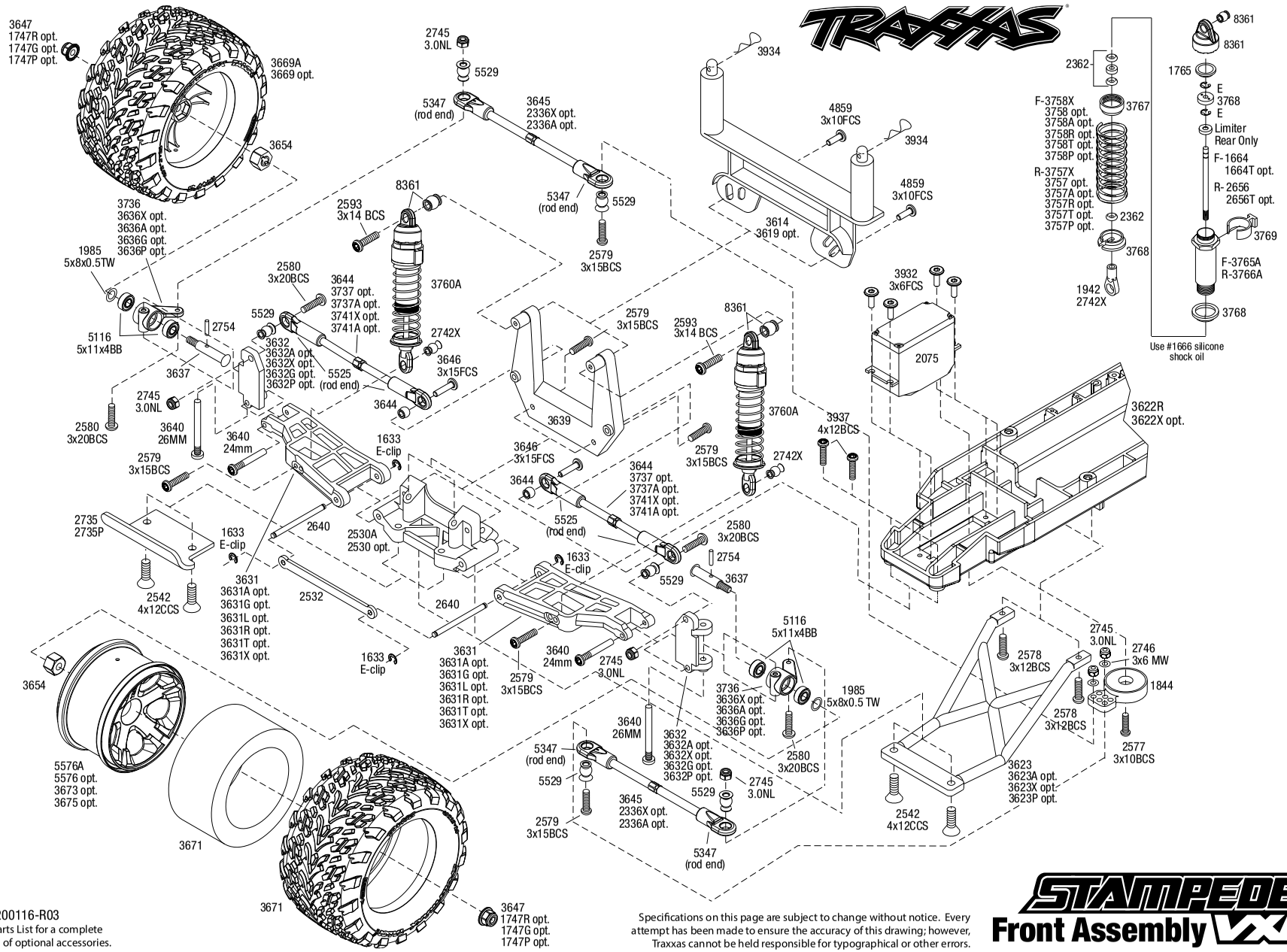

REV 200116-R03
See Parts List for a complete listing of optional accessories.

Specifications on this page are subject to change without notice. Every attempt has been made to ensure the accuracy of this drawing; however, Traxxas cannot be held responsible for typographical or other errors.

STAMPEDE VXL Front Assembly

STAMPEDE VXL® (36076-4)

STAMPEDE VXL Chassis Assembly

REV 200116-R03

Specifications on this page are subject to change without notice. Every attempt has been made to ensure the accuracy of this drawing; however, Traxxas cannot be held responsible for typographical or other errors.

See Parts List for a complete listing of optional accessories.

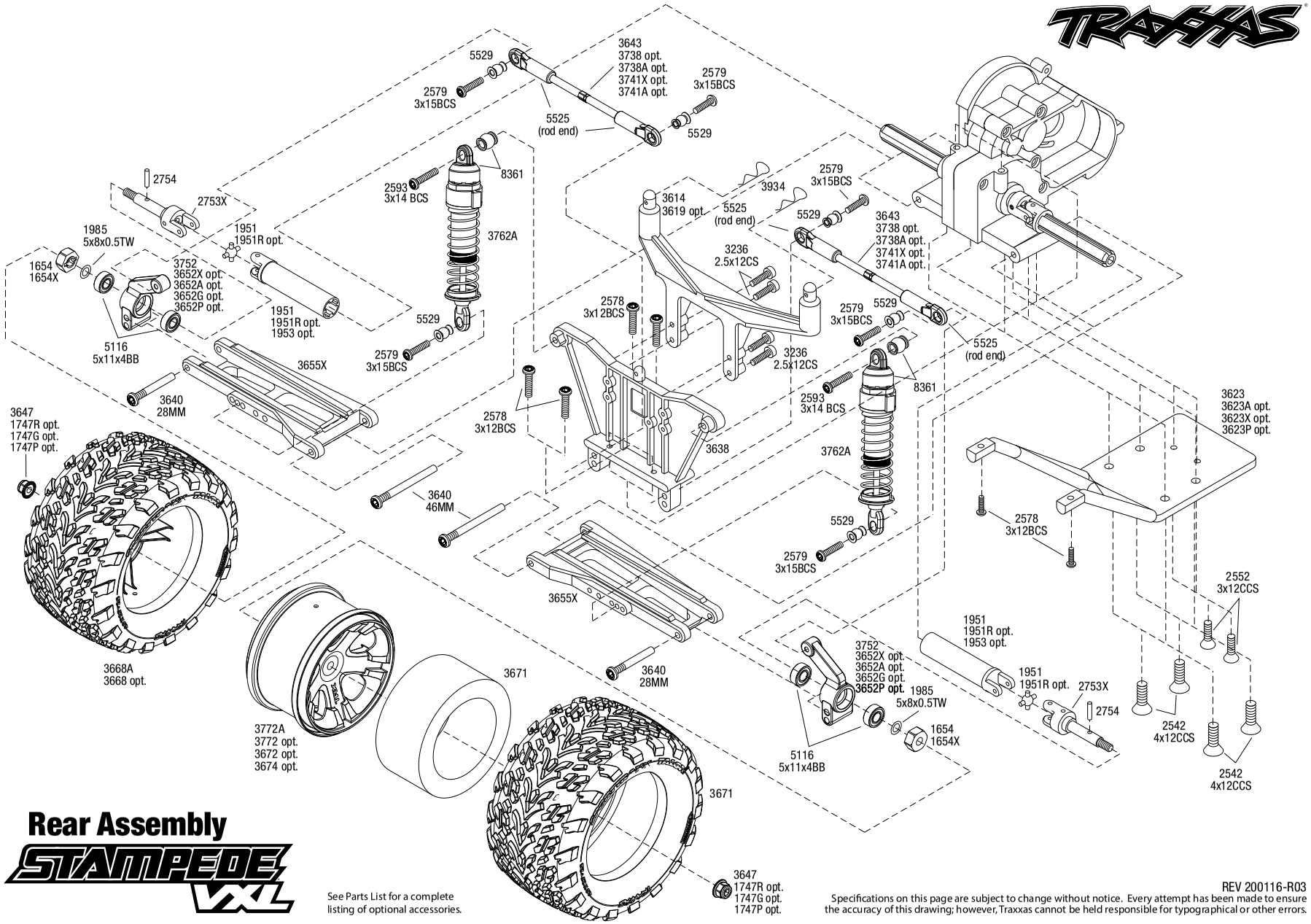

Rear Assembly

STAMPEDE VXL

See Parts List for a complete listing of optional accessories.

REV 200116-R03

Specifications on this page are subject to change without notice. Every attempt has been made to ensure the accuracy of this drawing; however, Traxxas cannot be held responsible for typographical or other errors.

STAMPEDE VXL® (36076-4)

Transmission Assembly

Specifications on this page are subject to change without notice. Every attempt has been made to ensure the accuracy of this drawing; however, Traxxas cannot be held responsible for typographical or other errors.

See Parts List for a complete listing of optional accessories.

PARTS SHOWN IN BOLD ARE OPTIONAL ACCESSORIES.

Part categories and individual part listings are arranged alphabetically.

Bearings & Bushings

4607 **Ball bearings (5x11x4mm) (8)**
5116 Ball bearings, blue rubber sealed (5x11x4mm) (2)
1675 **Bushings, self-lubricating (5x11x4mm) (14)**
1985 PTFE-coated washers, 5x8x0.5mm (20) (use with ball bearings)

Body & Accessories

1926 **Antenna caps, vinyl (2)/ antenna spool**
1726 Antenna, tube (1)/ vinyl antenna cap (1)/ wire retainer (1)
1834 Body clips (12) (standard size)
3934 Body clips, heavy duty (12)
1914R **Body mount, front & rear (black)/ body posts, 52mm (2), 38mm (2), 25mm (2), 6.5mm (2)/ body post extensions (4)/ hardware**
3614 Body mounts (front & rear)
3619 **Body mounts, front & rear/ body mount posts, front & rear (adjustable)/ 2.5x18mm screw pins (4)**
1815 Body washers (8)
6716 **Body washers, foam, 2mm (2)/ 3mm (2)/ 4mm (4)**
3617 **Body, Stampede® (clear, requires painting) (requires #3614 to mount)**
2514 **Decal sheet, racing sponsors**
3613R Decal sheets, Stampede® VXL
9950 **Official Team Traxxas® racing decal set (flag logo/ 6-color)**
5185 **Tires, rubber (2) (fits Traxxas® wheelie bar wheels)**
3677A **Wheelie bar mount (1) / hardware (green)**
3677P **Wheelie bar mount (1) / hardware (pink)**
3677 Wheelie bar mount (1)/ hardware (black)
3677X **Wheelie bar mount (1)/ hardware (blue)**
3678 Wheelie bar, assembled (black) (fits Slash, Bandit, Rustler®, Stampede® series)
3678X **Wheelie bar, assembled (blue) (fits Slash, Bandit, Rustler®, Stampede® series)**
3678A **Wheelie bar, assembled (green) (fits Slash, Bandit, Rustler®, Stampede® series)**
3678P **Wheelie bar, assembled (pink) (fits Slash, Bandit, Rustler®, Stampede® series)**
4976 Wheels (4)/ axles (2) (for T-Maxx®/E-Maxx wheelie bar)
5186A **Wheels, aluminum (blue-anodized) (2)/ 5x8mm ball bearings (4)/ axles (2)/ rubber tires (2)**
5186 **Wheels, aluminum (red-anodized) (2)/ 5x8mm ball bearings (4)/ axles (2)/ rubber tires (2)**

Chassis & Attachments

3725X **Battery expansion kit (allows for installation of taller multi-cell battery packs) (Rustler, Bandit, Stampede) (requires part #3627X)**
3627X Battery hold-down (grey) (1) / receiver hold-down (grey) (1) / metal posts (2)/ spacers (2)/ body clips (2)/ servo tape/ adhesive foam pad
3628 Box, receiver (sealed)/ foam pad/2.5x8mm CS (4)/ 3x10mm CS (2)
2735 Bumper (front)
2735P **Bumper (front) (pink)**
3622X **Main chassis (black) (164mm long battery compartment) (fits both flat and hump style battery packs) (use only with #3626R ESC mounting plate)**
3622R Main chassis (grey) (164mm long battery compartment) (fits both flat and hump style battery packs) (use only with #3626R ESC mounting plate)
3626R Mounting plate, electronic speed control/receiver box (for installation of XL-5/VXL and waterproof receiver box into Stampede®)
3629 Seal kit, receiver box (includes o-ring, seals, and silicone grease)
3623 Skid plates, front & rear (black)
3623X **Skid plates, front & rear (blue)**
3623A **Skid plates, front & rear (green)**
3623P **Skid plates, front & rear (pink)**
5185 **Tires, rubber (2) (fits Traxxas® wheelie bar wheels)**
3677A **Wheelie bar mount (1) / hardware (green)**
3677P **Wheelie bar mount (1) / hardware (pink)**
3677 Wheelie bar mount (1)/ hardware (black)
3677X **Wheelie bar mount (1)/ hardware (blue)**
3678 Wheelie bar, assembled (black) (fits Slash, Bandit, Rustler®, Stampede® series)
3678X **Wheelie bar, assembled (blue) (fits Slash, Bandit, Rustler®, Stampede® series)**
3678A **Wheelie bar, assembled (green) (fits Slash, Bandit, Rustler®, Stampede® series)**
3678P **Wheelie bar, assembled (pink) (fits Slash, Bandit, Rustler®, Stampede® series)**
4976 Wheels (4)/ axles (2) (for T-Maxx®/E-Maxx wheelie bar)
5186A **Wheels, aluminum (blue-anodized) (2)/ 5x8mm ball bearings (4)/ axles (2)/ rubber tires (2)**
5186 **Wheels, aluminum (red-anodized) (2)/ 5x8mm ball bearings (4)/ axles (2)/ rubber tires (2)**

Differential Components

2381X Main diff with steel ring gear/ side cover plate/ screws (Bandit, Stampede®, Rustler®)
2382 Planet gears (4)/ planet shafts (4)/ sun gears (2)/sun gear alignment shaft (1) all hardened steel
2388X Planetary gear differential with steel ring gear (complete) (fits Bandit, Stampede®, Rustler®)
5169 Screws, 2.6x8mm countersunk machine (6)
1647 Silicone grease

Driveline Components

4628R Differential output yokes, black (2)/ 3x5mm countersunk screws (2)/ screw pin (2)
4628X **Differential output yokes, hardened steel (w/ U-joints) (2)**
6828X **Differential output yokes, heavy duty (2)/ screw pin (2)**
1951R **Driveshafts, rear, steel-spline constant-velocity (complete assembly) (2) (fits 2WD Rustler/Stampede)**
1953 **Half shaft pro-pack (internal-splined (6)/ external-splined (6) (plastic shafts only)**
6752 **Half shaft, external splined (steel-spline constant-velocity) (1) (fits 2WD Rustler/Stampede)**
6751 **Half shaft, internal splined (steel-spline constant-velocity) (1)**
6850X **Half shafts, heavy duty (external splined (2)/ internal splined (2))/ metal u-joints (4)**
1951 Half shafts, long truck (external-splined (2) & internal-splined (2)/ metal U-joints (4)
6757 **Rebuild kit, steel-splined constant-velocity driveshafts (includes pins, dustboots, lube, and hardware)**
3752 Stub axle carriers (2) (requires 5x11x4mm bearings)
3652A **Stub axle carriers, Rustler®/Stampede®/Bandit (2), 6061-T6 aluminum (blue-anodized)/ 5x11mm ball bearings (4)**
3652G **Stub axle carriers, Rustler®/Stampede®/Bandit (2), 6061-T6 aluminum (green-anodized)/ 5x11mm ball bearings (4)**
3652P **Stub axle carriers, Rustler®/Stampede®/Bandit (2), 6061-T6 aluminum (pink-anodized)/ 5x11mm ball bearings (4)**
3652X **Stub axle carriers, Rustler®/Stampede®/Bandit (2), 6061-T6 aluminum (red-anodized)/ 5x11mm ball bearings (4)**
2754 Stub axle pins (4)
6753 **Stub axle, rear, 5mm (steel-splined constant-velocity driveshaft) (1)**
2753X Stub axles, rear (2)
6853X **Stub axles, rear, heavy duty (2)/pins (2)**

Front Suspension & Steering

3637 Axles (front) (2)
5116 Ball bearings, blue rubber sealed (5x11x4mm) (2)
2530 **Bulkhead (front) (black)**
2530A Bulkhead (front) (grey)
3632 Caster blocks (l&r) (30-degree)
3632A **Caster blocks, 30-degree, blue-anodized 6061-T6 aluminum (left & right)/ suspension screw pin (2)**
3632G **Caster blocks, 30-degree, green-anodized 6061-T6 aluminum (left & right)/ suspension screw pin (2)**
3632P **Caster blocks, 30-degree, pink-anodized 6061-T6 aluminum (left & right)/ suspension screw pin (2)**
3632X **Caster blocks, 30-degree, red-anodized 6061-T6 aluminum (left & right)/ suspension screw pin (2)**
3646 Screws, 3x15mm flat-head machine (hex drive) (6)
1844 Servo saver
3639 Shock tower (front)
3736 Steering blocks, left & right (2) (requires 5x11x4mm bearings)
3636A **Steering blocks, Rustler®/Stampede®/Bandit (2), 6061-T6 aluminum (blue-anodized)/ 5x11mm ball bearings (4)**
3636G **Steering blocks, Rustler®/Stampede®/Bandit (2), 6061-T6 aluminum (green-anodized)/ 5x11mm ball bearings (4)**
3636P **Steering blocks, Rustler®/Stampede®/Bandit (2), 6061-T6 aluminum (pink-anodized)/ 5x11mm ball bearings (4)**
3636X **Steering blocks, Rustler®/Stampede®/Bandit (2), 6061-T6 aluminum (red-anodized)/ 5x11mm ball bearings (4)**
3631 Suspension arms (front) (2)
3631X **Suspension arms, black, front, heavy duty (2)**
3631A **Suspension arms, blue, front, heavy duty (2)**
3631G **Suspension arms, green, front, heavy duty (2)**
3631T **Suspension arms, orange, front, heavy duty (2)**
3631R **Suspension arms, red, front, heavy duty (2)**

STAMPEDE VXL® (36076-4)

3631L **Suspension arms, white, front, heavy duty (2)**
2640 Suspension pins, 44mm (2) w/ e-clips
3640 Suspension screw pin set, steel (hex drive) (requires part #2640 for a complete suspension pin set) (Bandit, Rustler®, Stampede®)
2532 Tie bar, fiberglass
3644 Turnbuckles, camber link, 39mm (69mm center to center) (assembled with rod ends and hollow balls) (1 left, 1 right)
3645 Turnbuckles, toe link, 61mm (96mm center to center) (2) (assembled with rod ends and hollow balls) (fits Stampede®)

Hardware

1926 **Antenna caps, vinyl (2)/ antenna spool**
1726 Antenna, tube (1)/ vinyl antenna cap (1)/ wire retainer (1)
1552 **Backplate screws (3x8mm cap-head machine) (6)/washers (6)/ wrench**
1834 Body clips (12) (standard size)
3934 Body clips, heavy duty (12)
1633 E-clips/ C-rings
2586 Screws, 3x15mm cap-head machine (hex drive) (6)
2745 Nuts, 3mm nylon locking (12)
3647 Nuts, 4mm flanged nylon locking (steel, serrated) (8)
1747 Nuts, 4mm nylon locking (10)
1747A **Nuts, aluminum, flanged, serrated (4mm) (red-anodized) (4)**
1985 PTFE-coated washers, 5x8x0.5mm (20) (use with ball bearings)
5525 Rod ends (12)/ hollow balls (12)
5347 Rod ends, Revo® (large) with hollow balls (12)
2742X Rod ends, short (6)/ hollow balls (6)
3236 Screws, 2.5x12mm cap-head machine (6)
3347 Screws, 2.5x5mm button-head machine (hex drive) (6)
2577 Screws, 3x10mm button-head machine (hex drive) (6)
4859 Screws, 3x10mm flat-head machine (hex drive) (4)
2578 Screws, 3x12mm button-head machine (hex drive) (6)
2552 Screws, 3x12mm countersunk machine (6) (hex drive)
2579 Screws, 3x15mm button-head machine (hex drive) (6)
3646 Screws, 3x15mm flat-head machine (hex drive) (6)
2580 Screws, 3x20mm button-head machine (hex drive) (6)
2591 Screws, 3x23mm button-head machine (hex drive) (6)
2582 Screws, 3x30mm button-head machine (hex drive) (6)
2592 Screws, 3x40mm button-head machine (hex drive) (6)
2575 Screws, 3x6mm button-head machine (hex drive) (6)
2554 Screws, 3x6mm cap-head machine (hex drive) (6)
3932 Screws, 3x6mm flat-head machine (hex drive) (6)
3931 Screws, 3x8mm flat-head machine (hex drive) (6)
3937 Screws, 4x12mm button-head machine (hex drive) (6)
2542 Screws, 4x12mm countersunk machine (hex drive) (6)
2743 Set (grub) screws, 3mm hardened (12)
5529 Shim set, 3x7x1mm (2), 3x6x0.5mm (4), 3x7x2mm (2)/ hollow balls, captured (4)
3642X **Shoulder screws, Ultra Shocks (3x12 hex drive) (6)**
2754 Stub axle pins (4)
2746 **Washers, 3x6mm metal (12)**

Motors & Electronics

1552 **Motor screws (3x8mm hex cap) (6)/washers (6)/ wrench**
2260 **BEC assembly (complete)**
3342 Bullet connectors, male, 3.5mm (3)/ heat shrink
3340 **Cooling fan, Velineon® VXL-3s ESC**
3790 Gear adapter, fixed
2072A Gear set (for 2070, 2075 servos)
3354R Motor cover, endbell (Velineon® 3500)
3351R Motor, Velineon® 3500, brushless (assembled with 12-gauge wire and gold-plated bullet connectors)
3626R Mounting plate, electronic speed control/receiver box (for installation of XL-5/VXL and waterproof receiver box into Stampede®)
3352R Rebuild kit, Velineon® 3500 (includes plastic endbell, 5x11x4mm ball bearings (2), 2.5x5mm BCS (with threadlock) (4), rear bushing)
3347 Screws, 2.5x5mm button-head machine (hex drive) (6)
3931 Screws, 3x8mm flat-head machine (hex drive) (6)
2074 Servo case/gaskets (for 2056 and 2075 waterproof servos)
2075R **Servo, digital high-speed, metal gear (ball bearing), waterproof**
2075 Servo, digital high-torque (ball bearing), waterproof
2075X **Servo, digital high-torque, metal gear (ball bearing), waterproof**
3350R Velineon® VXL-3s Brushless Power System, waterproof (includes VXL-3s waterproof ESC, Velineon 3500 motor, and speed control mounting plate (part #3725R))
3355R Velineon® VXL-3s Electronic Speed Control, waterproof (brushless) (fwd/rev/brake)
3343 Wire, 12-gauge, silicone (Maxx® Cable) (650mm or 26 inches)

Radio System, Batteries & Chargers

2849X **4000mAh 11.1v 3-Cell 25C LiPo Battery**
2872X **5000mAh 11.1v 3-Cell 25C LiPo Battery**
2842X **5000mAh 7.4v 2-Cell 25C LiPo Battery**
2843X **5800mAh 7.4v 2-Cell 25C LiPo Battery**
2857X **6400mAh 11.1v 3-Cell 25C LiPo Battery**
2869X **7600mAh 7.4v 2-Cell 25C LiPo Battery**
2976 **AC to DC converter, 40W**
2938X **Adapter, Traxxas® iD® LiPo battery (adapts Traxxas iD batteries to separate balance ports)**
1726 Antenna, tube (1)/ vinyl antenna cap (1)/ wire retainer (1)
2943 **Battery charge indicators (green (4), blue (4), grey (4))**
6548 Battery door, transmitter (replacement for #6516, 6517, 6528, 6529, 6530 transmitters)
2914 **Battery, Power Cell AA Alkaline (4)**
2922X **Battery, Power Cell, 3000mAh (NiMH, 6-C flat, 7.2V)**
2923X **Battery, Power Cell, 3000mAh (NiMH, 7-C flat, 8.4V)**
2926X **Battery, Power Cell, 3000mAh (NiMH, 7-C hump, 8.4V)**
2942X **Battery, Series 3 Power Cell, 3300mAh (NiMH, 6-C flat, 7.2V)**
2940X **Battery, Series 3 Power Cell, 3300mAh (NiMH, 7-C flat, 8.4V)**
2941X **Battery, Series 3 Power Cell, 3300mAh (NiMH, 7-C hump, 8.4V)**
2952X **Battery, Series 4 Power Cell, 4200mAh (NiMH, 6-C flat, 7.2V)**
2950X **Battery, Series 4 Power Cell, 4200mAh (NiMH, 7-C flat, 8.4V)**
2951X **Battery, Series 4 Power Cell, 4200mAh (NiMH, 7-C hump, 8.4V)**
2960X **Battery, Series 5 Power Cell, 5000mAh (NiMH, 7-C flat, 8.4V)**
2961X **Battery, Series 5 Power Cell, 5000mAh (NiMH, 7-C hump, 8.4V)**
2963X **Battery, Series 5 Power Cell, 5000mAh (NiMH, 8-C hump, 9.6V)**
2984 **Battery/charger completer pack (includes #2969 2-amp NiMH peak detecting AC charger (1), #2926X 3000mAh 8.4V 7-cell NiMH battery (1))**
2992 **Battery/charger completer pack (includes #2970 iD® charger (1), #2843X 5800mAh 7.4V 2-cell 25C LiPo battery (1))**
2994 **Battery/charger completer pack (includes #2970 iD® charger (1), #2849X 4000mAh 11.1v 3-Cell 25C LiPo Battery (1))**
2260 **BEC assembly (complete)**
2975 **Charger, DC, 4 amp (6 - 7 cell, 7.2 - 8.4 volt, NiMH)**
2972 **Charger, EZ-Peak® Dual, 100W, NiMH/LiPo with iD® Auto Battery Identification**
2973 **Charger, EZ-Peak® Live Dual, 200W, NiMH/LiPo with iD® Auto Battery Identification**
2971 **Charger, EZ-Peak® Live, 100W, NiMH/LiPo with iD® Auto Battery Identification**
2970 **Charger, EZ-Peak® Plus, 4 amp, NiMH/LiPo with iD® Auto Battery Identification**
6525 **Communication link, telemetry expander**
6541 **Connector, power tap (with cable) (long)/ wire tie**
6512 Cover plate, Traxxas Link™ Wireless Module
2978 **Fuse, charger, 5A (2) (for #2974, 2975, 2977)**
2072A Gear set (for 2070, 2075 servos)
2968X **LiPo cell voltage checker/balancer (includes #2938X adapter for Traxxas® iD® batteries)**
2968 **LiPo cell voltage checker/balancer (requires #2938X adapter for Traxxas® iD® batteries)**
6535 **Mount, temperature sensor (electric motors)/ wire tie/ thermal pad**
6533 Receiver, micro, TQi 2.4GHz with telemetry & TSM (5-channel)
6552 **Seal kit, expander box (includes o-ring, seals, and silicone grease)**
6526 **Sensor, auto-detectable, temperature**
6527 **Sensor, auto-detectable, voltage**
6522 **Sensor, RPM (short)/ 3x4mm BCS (2)**
6521 **Sensor, temperature and voltage (long)**
2074 Servo case/gaskets (for 2056 and 2075 waterproof servos)
2075R **Servo, digital high-speed, metal gear (ball bearing), waterproof**
2075 Servo, digital high-torque (ball bearing), waterproof
2075X **Servo, digital high-torque, metal gear (ball bearing), waterproof**
6553X **Telemetry expander 2.0 and GPS module 2.0, TQi radio system**
6550X **Telemetry expander 2.0, TQi radio system (for use only with #6551X GPS module)**
6551X **Telemetry GPS module 2.0, TQi radio system (for use only with #6550X telemetry expander)**
6538 **Telemetry trigger magnet holders, spur gear/ magnet, 5x2mm (1)/ 3x8mm CCS (3)/ 3x10mm CCS (3)**
6540 **Telemetry trigger magnet, 5X2mm (1)**
6509R TQi 2.4 GHz High Output radio system, 2-channel, Traxxas Link™ enabled, TSM (2-ch transmitter, 5-ch micro receiver)
6507R **TQi 2.4 GHz High Output radio system, 4-channel with Traxxas Link™ Wireless Module, TSM (4-ch transmitter, 5-ch micro receiver)**
6528 Transmitter, TQi Traxxas Link™ enabled, 2.4GHz high output, 2-channel (transmitter only)
6529 **Transmitter, TQi Traxxas Link™ enabled, 2.4GHz high output, 3-channel (transmitter only)**
6530 **Transmitter, TQi Traxxas Link™ enabled, 2.4GHz high output, 4-channel (transmitter only)**
6511 **Traxxas Link™ Wireless Module**

REV. 201002 1242

3355R Velineon® VXL-3s Electronic Speed Control, waterproof (brushless) (fwd/rev/brake)
6537 Wire retainers, gear cover/ 3x4mm BCS (2)

Ready-To-Race Model

36076-4 Stampede® VXL: 1/10 Scale Monster Truck with TQi Traxxas Link™ Enabled 2.4GHz Radio System & Traxxas Stability Management (TSM)®

Rear Suspension

5116 Ball bearings, blue rubber sealed (5x11x4mm) (2)
3638 Shock tower (rear)
3752 Stub axle carriers (2) (requires 5x11x4mm bearings)
3652A Stub axle carriers, Rustler®/Stampede®/Bandit (2), 6061-T6 aluminum (blue-anodized)/ 5x11mm ball bearings (4)
3652G Stub axle carriers, Rustler®/Stampede®/Bandit (2), 6061-T6 aluminum (green-anodized)/ 5x11mm ball bearings (4)
3652P Stub axle carriers, Rustler®/Stampede®/Bandit (2), 6061-T6 aluminum (pink-anodized)/ 5x11mm ball bearings (4)
3652X Stub axle carriers, Rustler®/Stampede®/Bandit (2), 6061-T6 aluminum (red-anodized)/ 5x11mm ball bearings (4)
2753X Stub axles, rear (2)
3655P Suspension arms, blue, front/rear (left & right), heavy duty (2)
3655R Suspension arms, front/rear (left & right), heavy duty (2)
3655G Suspension arms, green, front/rear (left & right), heavy duty (2)
3655X Suspension arms, left & right
3655T Suspension arms, orange, front/rear (left & right), heavy duty (2)
3655L Suspension arms, red, front/rear (left & right), heavy duty (2)
3655A Suspension arms, white, front/rear (left & right), heavy duty (2)
3640 Suspension screw pin set, steel (hex drive) (requires part #2640 for a complete suspension pin set) (Bandit, Rustler®, Stampede®)

Shocks (Pro-level Aluminum)

2664 Big Bore shock cylinder (long) (1)
2666 Big Bore shock cylinder (XX-long) (1)
5862 Big Bore shocks (hard-anodized & PTFE-coated T6 aluminum) (assembled with TiN shafts and springs) (front & rear) (4)
2660 Big Bore shocks (long) (hard-anodized & PTFE-coated T6 aluminum) (assembled with TiN shafts) w/o springs (front) (2)
2662 Big Bore shocks (XX-long) (hard-anodized & PTFE-coated T6 aluminum) (assembled with TiN shafts) w/o springs (rear) (2)
2669 Piston head set (2-hole (2)/ 3-hole (2))/ shock mounting bushings & washers (2) (Big Bore Shocks)
2362 Rebuild kit, Ultra shocks (for 2 shocks)
1942 Rod ends (16 long & 4 short)/ hollow ball connectors (18)/ ball screws (2)
2742X Rod ends, short (6)/ hollow balls (6)
2667 Shock caps, aluminum (Big Bore Shocks) (2)
1664T Shock shafts, hardened steel, titanium nitride coated (long) (2)
2656T Shock shafts, hardened steel, titanium nitride coated (xx-long) (2)
1664 Shock shafts, steel, chrome finish (long) (2)
2656 Shock shafts, steel, chrome finish (xx-long) (2)
1765 Silicone diaphragms (4)
1666 Silicone shock oil (30 wt)
2668 Spring retainers, upper & lower (2)/ spring pre-load spacers: 1mm (4)/ 1.5mm (2)/ 2mm (2)/ 4mm (2)/ 8mm (2) (Big Bore Shocks)
5860 Springs, front (white) (progressive rate) (2) (fits #5862 aluminum Big Bore shocks)
5859 Springs, rear (white) (progressive rate) (2) (fits #5862 aluminum Big Bore shocks)

Shocks (Ultra Shocks)

3642 Attachment screws, shock (3x12mm shoulder screws) (6)
3765A Body, Ultra Shock(s) (long) (grey) (2)
3766A Body, Ultra Shock(s) (XXL) (grey) (2)
2362 Rebuild kit, Ultra shocks (for 2 shocks)
1942 Rod ends (16 long & 4 short)/ hollow ball connectors (18)/ ball screws (2)
2742X Rod ends, short (6)/ hollow balls (6)
3767 Shock caps (2)/ shock bottoms (2)
8361 Shock caps (black) (4) (assembled with hollow balls)
3767A Shock caps, aluminum (blue-anodized) (4) (fits all Ultra Shocks)
3767G Shock caps, aluminum (green-anodized) (4) (fits all Ultra Shocks)
3767P Shock caps, aluminum (pink-anodized) (4) (fits all Ultra Shocks)
3767X Shock caps, aluminum (red-anodized) (4) (fits all Ultra Shocks)
1664T Shock shafts, hardened steel, titanium nitride coated (long) (2)
2656T Shock shafts, hardened steel, titanium nitride coated (xx-long) (2)
1664 Shock shafts, steel, chrome finish (long) (2)
2656 Shock shafts, steel, chrome finish (xx-long) (2)
1765 Silicone diaphragms (4)
1666 Silicone shock oil (30 wt)
3769 Spring pre-load spacers: 1mm (4)/ 2mm (2)/ 4mm (2)/ 8mm (2)
3768 Spring retainers, upper & lower (2)/ piston head set (2-hole (2)/ 3-hole (2))
3758 Springs, front (black) (2)
3758T Springs, front (blue) (2)
3758A Springs, front (green) (2)
3758P Springs, front (pink) (2)
3758X Springs, front (white) (2)
3757 Springs, rear (black) (2)
3757T Springs, rear (blue) (2)
3757A Springs, rear (green) (2)
3757P Springs, rear (pink) (2)
3757R Springs, rear (red) (2.9 rate) (2)
3757X Springs, rear (white) (2)
4957 Springs, red (for Ultra Shocks only) (2.5 rate) (f/r) (2)
3760 Ultra Shocks (black) (long) (complete w/ spring pre-load spacers & springs) (front) (2)
3762 Ultra Shocks (black) (xx-long) (complete w/ spring pre-load spacers & springs) (rear) (2)
3760A Ultra Shocks (grey) (long) (complete w/ spring pre-load spacers & springs) (2)
3762A Ultra Shocks (grey) (xx-long) (complete w/ spring pre-load spacers & springs) (rear) (2)

Slipper Clutch Components

3793 Input shaft (slipper shaft) / spring pin
5552X Rebuild kit, slipper clutch (steel disc/ friction pads (3)/ spring (2)/ pin/ 4.0mm NL (1)/ 5.0mm NL (1))
2554 Screws, 3x6mm cap-head machine (hex drive) (6)
5556 Slipper pressure plate & hub (aluminum alloy)

Spur Gears & Pinion Gears

3790 Gear adapter, fixed
2416 Gear, 16-T pinion (48-pitch) / set screw
1918 Gear, 18-T pinion (48-pitch) / set screw
2419 Gear, 19-T pinion (48-pitch) / set screw
2421 Gear, 21-T pinion (48-pitch) / set screw
2423 Gear, 23-T pinion (48-pitch) / set screw
2426 Gear, 26-T pinion (48-pitch)/set screw
2431 Gear, 31-T pinion (48-pitch) / set screw
4725 Gear, pinion (25-tooth) (48-pitch) / set screw
4728 Gear, pinion (28-tooth) (48-pitch)/ set screw
4676 Spur gear, 76-tooth (48-pitch) (for models with Torque-Control slipper clutch)
4683 Spur gear, 83-tooth (48-pitch) (for models with Torque-Control slipper clutch)
4686 Spur gear, 86-tooth (48-pitch) (for models with Torque-Control slipper clutch)
4690 Spur gear, 90-tooth (48-pitch) (for models with Torque-Control slipper clutch)

Steering Components

5347 Rod ends, Revo® (large) with hollow balls (12)
1844 Servo saver
2336A Turnbuckles, aluminum (blue-anodized), toe links, 61mm (2) (assembled w/ rod ends & hollow balls) (fits Stampede®) (requires 5mm aluminum wrench #5477)
2336X Turnbuckles, aluminum (red-anodized), toe links, 61mm (2) (assembled with rod ends & hollow balls) (fits Stampede®) (requires 5mm aluminum wrench #5477)
3645 Turnbuckles, toe link, 61mm (96mm center to center) (2) (assembled with rod ends and hollow balls) (fits Stampede®)

Suspension Linkage

5525 Rod ends (12)/ hollow balls (12)
5347 Rod ends, Revo® (large) with hollow balls (12)
1844 Servo saver
2640 Suspension pins, 44mm (2) w/ e-clips
3640 Suspension screw pin set, steel (hex drive) (requires part #2640 for a complete suspension pin set) (Bandit, Rustler®, Stampede®)
3737A Turnbuckle, aluminum (blue-anodized), camber link, front, 39mm (1)(assembled w/rod ends)/ hollow balls (2) (See part 3741A for complete camber link set)
3738A Turnbuckle, aluminum (blue-anodized), camber link, rear, 49mm (1) (assembled w/ rod ends & hollow balls) (See part 3741A for complete camber link set)
3737 Turnbuckle, aluminum (red-anodized), camber link, front, 39mm (1) (assembled w/rod ends)/ hollow balls (2)(See part 3741X for complete camber link set)
3738 Turnbuckle, aluminum (red-anodized), camber link, rear, 49mm (1) (assembled with rod ends & hollow balls) (See part 3741X for complete camber link set)
3741A Turnbuckles, aluminum (blue-anodized), camber links, front, 39mm (2), rear, 49mm (2) (assembled w/rod ends & hollow balls)/ wrench

STAMPEDE VXL® (36076-4)

2336A **Turnbuckles, aluminum (blue-anodized), toe links, 61mm (2) (assembled w/ rod ends & hollow balls) (fits Stampede®) (requires 5mm aluminum wrench #5477)**
3741X **Turnbuckles, aluminum (red-anodized), camber links, front, 39mm (2), rear, 49mm (2) (assembled w/ rod ends & hollow balls)/wrench**
2336X **Turnbuckles, aluminum (red-anodized), toe links, 61mm (2) (assembled with rod ends & hollow balls) (fits Stampede®) (requires 5mm aluminum wrench #5477)**
3644 Turnbuckles, camber link, 39mm (69mm center to center) (assembled with rod ends and hollow balls) (1 left, 1 right)
3643 Turnbuckles, camber link, 49mm (82mm center to center) (assembled with rod ends and hollow balls) (1 left, 1 right)
3645 Turnbuckles, toe link, 61mm (96mm center to center) (2) (assembled with rod ends and hollow balls) (fits Stampede®)

Team Traxxas Items

2514 **Decal sheet, racing sponsors**
6160X **DVD, Maxx® Power! Full Throttle Action (sleeve)**
9950 **Official Team Traxxas® racing decal set (flag logo/ 6-color)**
9909 **Traxxas® racing banner, red & black (3x7 feet)**

Tires & Wheels

5116 Ball bearings, blue rubber sealed (5x11x4mm) (2)
5854 **Hub retainer, 17mm hubs, M4 X 0.7 (4) (use with #5853X, #6856X, #6469)**
3647 Nuts, 4mm flanged nylon locking (steel, serrated) (8)
1985 PTFE-coated washers, 5x8x0.5mm (20) (use with ball bearings)
1647 Silicone grease
2754 Stub axle pins (4)
3689 **Tires & wheels, assembled, glued (2.8") (All-Star black chrome wheels, paddle tires, foam inserts) (2WD electric rear) (2) (TSM rated)**
3668A Tires & wheels, assembled, glued (2.8") (All-Star black chrome wheels, Talon tires, foam inserts) (2WD electric rear) (2) (TSM rated)
3669A Tires & wheels, assembled, glued (2.8") (All-Star black chrome wheels, Talon tires, foam inserts) (nitro rear/ electric front) (2) (TSM rated)
3668 **Tires & wheels, assembled, glued (2.8") (All-Star chrome wheels, Talon tires, foam inserts) (2WD electric rear) (2)**
3669 **Tires & wheels, assembled, glued (2.8") (All-Star chrome wheels, Talon tires, foam inserts) (nitro rear/ electric front) (2)**
1970 **Tires, low-profile spiked 2.2" (2)**
4791 **Tires, Pro-Trax mini-spiked 2.2" (rear) (2)**
4790R **Tires, Pro-Trax spiked 2.2" (soft-compound)(rear) (2)/ foam inserts (2)**
1870 **Tires, Sledgehammer terra-spiked (2)**
3671 Tires, Talon 2.8" (2)/ foam inserts (2)
1654 Wheel hubs, hex (rear) (2)/ stub axle pins (2)
3654 Wheel hubs, hex (front) (tall offset) (2)/ axle pins (2.5x12mm) (2)
5853X **Wheel hubs, splined, 17mm, short (2), long (2)/wheel nuts, splined, 17mm (4) (blue-anodized)/ hub retainer M4x0.7 (4)/axle pin (4)/wrench, 5mm**
5353 **Wheel nuts, splined, 17mm (blue-anodized) (4)**
5480X **Wheel wrench, splined, 17mm**
3772A Wheels, All-Star 2.8" (black chrome) (2WD electric rear)
5576A Wheels, All-Star 2.8" (black chrome) (nitro rear/ electric front) (2)
3772 **Wheels, All-Star 2.8" (chrome) (2WD electric rear)**
5576 **Wheels, All Star 2.8" (chrome) (2) (Rustler/Stampede front)**
3673 **Wheels, chrome (2.2") (front) (2)**
3672 **Wheels, chrome (2.2") (rear) (2)**
3675 **Wheels, dyeable nylon 2.2 (front) (2)**
3674 **Wheels, dyeable nylon 2.2 (rear) (2)**
3774 **Wheels, Twin-Spoke 2.8" (chrome) (2WD electric rear) (2)**
5572 **Wheels, Twin-Spoke 2.8" (chrome) (nitro rear/ electric front) (2)**

Transmission Components

1552 **Motor screws (3x8mm hex cap) (6)/washers (6)/ wrench**
4607 **Ball bearings (5x11x4mm) (8)**
5116 Ball bearings, blue rubber sealed (5x11x4mm) (2)
3792 Cover, gear/ rubber gear cover plug/ 3x6 RM (2)
5478 Flat wrench, 8mm (blue-anodized aluminum)
3790 Gear adapter, fixed
3691 **Gearbox halves (l&r) (black) w/ idler gear shaft**
3691A Gearbox halves (l&r) (grey) w/ idler gear shaft
5148 Grease, white lithium
3696 Idler gear, steel (30-tooth)
3793 Input shaft (slipper shaft) / spring pin
2381X Main diff with steel ring gear/ side cover plate/ screws (Bandit, Stampede®, Rustler®)
2382 Planet gears (4)/ planet shafts (4)/ sun gears (2)/sun gear alignment shaft (1) all hardened steel
2388X Planetary gear differential with steel ring gear (complete) (fits Bandit, Stampede®, Rustler®)
5552X Rebuild kit, slipper clutch (steel disc/ friction pads (3)/ spring (2)/ pin/ 4.0mm NL (1)/ 5.0mm NL (1))
2554 Screws, 3x6mm cap-head machine (hex drive) (6)
3931 Screws, 3x8mm flat-head machine (hex drive) (6)
3185X Screws, 3x8mm washerhead machine (large head for motor mount) (6)
1647 Silicone grease
5556 Slipper pressure plate & hub (aluminum alloy)
3195 Top drive gear, steel (22-tooth)

Traxxas Tools

3433X **Body reamer (aluminum handle)**
3433 **Body reamer (plastic handle)**
3436 **Cap, body reamer**
3432 **Scissors, curved tip**
3431 **Scissors, straight tip**
8712 **Speed Bit Essentials Set, hex and nut driver, 7-piece, includes premium handle (medium), travel pouch, hex drivers (straight: 1.5mm, 2.0mm, 2.5mm) and nut drivers (5.0mm, 5.5mm, 7.0mm, and 8.0mm), 1/4" drive**
8721 **Speed bit handle, medium (one piece)**
8720 **Speed bit handle, premium, large (rubber overmold)**
8722 **Speed bit handle, premium, medium (rubber overmold)**
8710 **Speed Bit Master Set, hex and nut driver, 13-piece, includes premium handle (medium), travel pouch, hex drivers (straight: 1.5mm, 2.0mm, 2.5mm, 3.0mm), (ball-end: 2.0mm, 2.5mm, 3.0mm), and nut drivers (4.00mm, 4.50mm, 5.00mm, 5.50mm, 7.00mm, 8.00mm),**
8711 **Speed Bit Master Set, hex driver, 7-piece straight and ball end, includes premium handle (medium), travel pouch, hex drivers (straight: 1.5mm, 2.0mm, 2.5mm, 3.0mm) (ball end: 2.0mm, 2.5mm, 3.0mm), 1/4" drive**
8719 **Speed Bit Master Set, nut driver, 6-piece, includes premium handle (medium), travel pouch, and nut drivers (4.0mm, 4.5mm, 5.0mm, 5.5mm, 7.0mm, 8.0mm), 1/4" drive**
8716 **Speed Bit Set, hex driver, 2-piece ball-end (2.0mm, 2.5mm), 1/4" drive**
8716X **Speed Bit Set, hex driver, 3-piece ball-end (2.0mm, 2.5mm, 3.0mm), 1/4" drive**
8715 **Speed Bit Set, hex driver, 3-piece straight (1.5mm, 2.0mm, 2.5mm), 1/4" drive**
8715X **Speed Bit Set, hex driver, 4-piece straight (1.5mm, 2.0mm, 2.5mm, 3.0mm), 1/4" drive**
3415 **Tool set with pouch (includes 1.5mm, 2.0mm, 2.5mm, 3.0mm, 3.5mm, 4mm drivers/ 4mm, 5mm, 5.5mm, 7mm and 8mm nut drivers/ 2mm, 4mm, and 5mm slotted screwdrivers/ #00 Phillips, #0 Phillips, and #1 Phillips screwdrivers/ 4mm and 8mm wrench/ driver handle**

Turnbuckles & Threaded Rods

5525 Rod ends (12)/ hollow balls (12)
5347 Rod ends, Revo® (large) with hollow balls (12)
3737A **Turnbuckle, aluminum (blue-anodized), camber link, front, 39mm (1)(assembled w/rod ends)/ hollow balls (2) (See part 3741A for complete camber link set)**
3738A **Turnbuckle, aluminum (blue-anodized), camber link, rear, 49mm (1) (assembled w/ rod ends & hollow balls) (See part 3741A for complete camber link set)**
3737 **Turnbuckle, aluminum (red-anodized), camber link, front, 39mm (1) (assembled w/rod ends)/ hollow balls (2)(See part 3741X for complete camber link set)**
3738 **Turnbuckle, aluminum (red-anodized), camber link, rear, 49mm (1) (assembled with rod ends & hollow balls) (See part 3741X for complete camber link set)**
3741A **Turnbuckles, aluminum (blue-anodized), camber links, front, 39mm (2), rear, 49mm (2) (assembled w/rod ends & hollow balls)/ wrench**
2336A **Turnbuckles, aluminum (blue-anodized), toe links, 61mm (2) (assembled w/ rod ends & hollow balls) (fits Stampede®) (requires 5mm aluminum wrench #5477)**
3741X **Turnbuckles, aluminum (red-anodized), camber links, front, 39mm (2), rear, 49mm (2) (assembled w/ rod ends & hollow balls)/wrench**
2336X **Turnbuckles, aluminum (red-anodized), toe links, 61mm (2) (assembled with rod ends & hollow balls) (fits Stampede®) (requires 5mm aluminum wrench #5477)**
3644 Turnbuckles, camber link, 39mm (69mm center to center) (assembled with rod ends and hollow balls) (1 left, 1 right)
3643 Turnbuckles, camber link, 49mm (82mm center to center) (assembled with rod ends and hollow balls) (1 left, 1 right)
3645 Turnbuckles, toe link, 61mm (96mm center to center) (2) (assembled with rod ends and hollow balls) (fits Stampede®)

REV. 201002 1242

RUSTLER

MODEL 37054-1/37054-4

ELECTRIC POWERED 2WD
STADIUM TRUCK



HIGH-CAPACITY 3000 MAH 7-CELL BATTERY AND 4-AMP DC FAST CHARGER

WATERPROOF XL-5 ESC AND TITAN 12T MOTOR

TQ 2.4GHz TRANSMITTER

THE NUMBER-ONE SELLING RTR STADIUM RACER!

The best-selling Traxxas Rustler is a proven favorite with a formula for rugged fun that nothing else can touch. The new Rustler blows the doors off the competition with more power, smoother control, better grip, and performance that makes it the fastest Ready-To-Race® electric truck available. The Rustler rips off-road with its new 12-turn 550 modified motor, XL-5 electronic speed control, and Revo®-Spec Torque-Control™ slipper clutch. It's made for power-sliding, full-throttle, off-road action and aggressive diving fun. With a top speed of 35+mph possible, Rustler leaves everything else back on the work bench. Racing style suspension geometry, high performance 2.8" off-road tires, and super smooth Ultra Shocks keep you in complete control. Rustler makes the race track anywhere you want to drive.

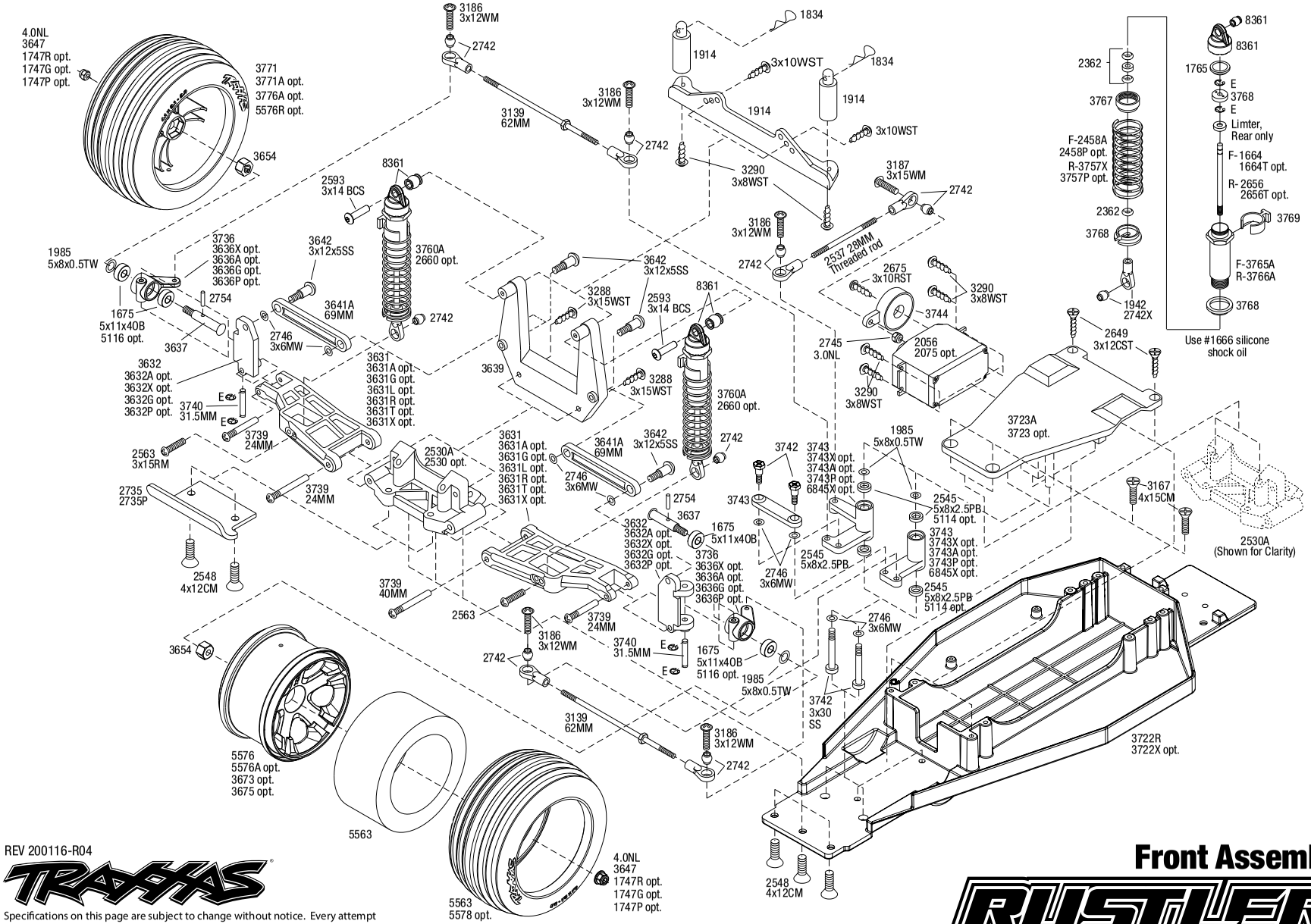

REV 200116-R04

TRAXXAS

Specifications on this page are subject to change without notice. Every attempt has been made to ensure the accuracy of this drawing; however, Traxxas cannot be held responsible for typographical or other errors.

See Parts List for a complete listing of optional accessories.

Front Assembly

RUSTLER

Questions? **Call toll-free, 1-888-TRAXXAS**

RUSTLER® (37054-1/37054-4)

RUSTLER Chassis Assembly

REV 200116-R04

TRAXXAS

See Parts List for a complete listing of optional accessories.

Specifications on this page are subject to change without notice. Every attempt has been made to ensure the accuracy of this drawing; however, Traxxas cannot be held responsible for typographical or other errors.

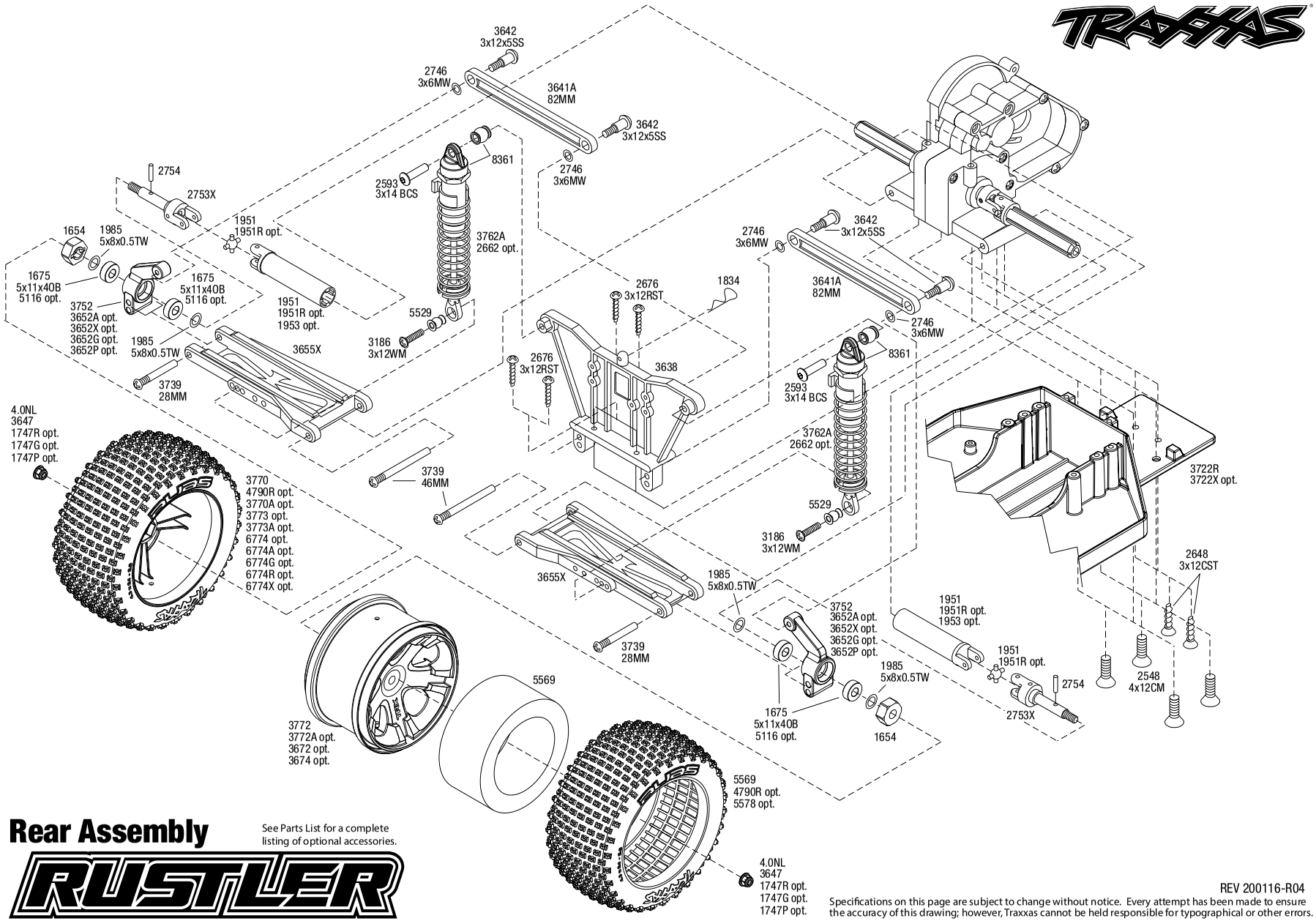

Rear Assembly

See Parts List for a complete listing of optional accessories.

RUSTLER

REV 200116-R04

Specifications on this page are subject to change without notice. Every attempt has been made to ensure the accuracy of this drawing; however, Traxxas cannot be held responsible for typographical or other errors.

RUSTLER

Transmission Assembly

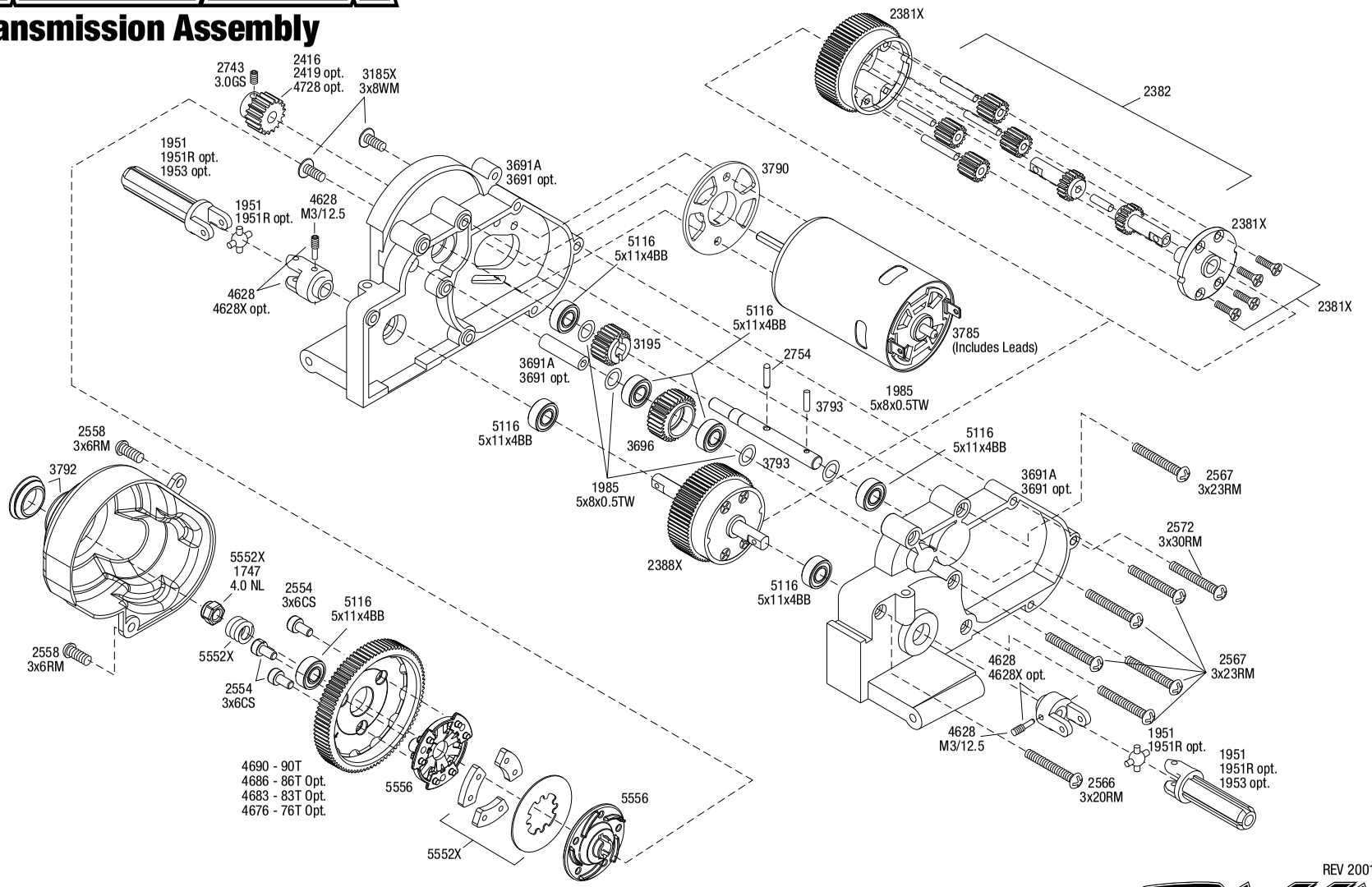

REV 200116-R04

See Parts List for a complete listing of optional accessories.

Specifications on this page are subject to change without notice. Every attempt has been made to ensure the accuracy of this drawing; however, Traxxas cannot be held responsible for typographical or other errors.

PARTS SHOWN IN BOLD ARE OPTIONAL ACCESSORIES.

Part categories and individual part listings are arranged alphabetically.

Bearings & Bushings

4607 **Ball bearings (5x11x4mm) (8)**
4608 **Ball Bearings (5x11x4mm) (6)/ 5x8x2.5mm (8)**
2728 **Ball bearings (5x8x2.5mm) (2)**
5116 Ball bearings, blue rubber sealed (5x11x4mm) (2)
5114 **Ball bearings, blue rubber sealed (5x8x2.5mm) (2)**
2545 Bellcrank bushings (plastic) (5x8x2.5mm) (4)
1675 Bushings, self-lubricating (5x11x4mm) (14)
1985 PTFE-coated washers, 5x8x0.5mm (20) (use with ball bearings)

Body & Accessories

1926 **Antenna caps, vinyl (2)/ antenna spool**
1726 Antenna, tube (1)/ vinyl antenna cap (1)/ wire retainer (1)
1834 Body clips (12) (standard size)
3934 **Body clips, heavy duty (12)**
1914R Body mount, front & rear (black)/ body posts, 52mm (2), 38mm (2), 25mm (2), 6.5mm (2)/ body post extensions (4)/ hardware
3614 **Body mounts (front & rear)**
1815 Body washers (8)
6716 **Body washers, foam, 2mm (2)/ 3mm (2)/ 4mm (4)**
3714 **Body, Rustler® (clear, requires painting)/window, lights decal sheet/ wing and aluminum hardware**
3749 **Body, Rustler®, Hawaiian graphics (painted, decals applied)**
3748 **Body, Rustler®, Rock n' Roll (painted, decals applied)**
3617 **Body, Stampede® (clear, requires painting) (requires #3614 to mount)**
2514 **Decal sheet, racing sponsors**
3716 Decal sheets, Rustler®
9950 **Official Team Traxxas® racing decal set (flag logo/ 6-color)**
5185 **Tires, rubber (2) (fits Traxxas® wheelie bar wheels)**
4974 **Wheelie bar arm (1)/ connector (1)/ 3x12 SS (hex drive) (4)**
3677A **Wheelie bar mount (1) / hardware (green)**
3677P **Wheelie bar mount (1) / hardware (pink)**
3677 **Wheelie bar mount (1)/ hardware (black)**
3677X **Wheelie bar mount (1)/ hardware (blue)**
3678 **Wheelie bar, assembled (black) (fits Slash, Bandit, Rustler®, Stampede® series)**
3678X **Wheelie bar, assembled (blue) (fits Slash, Bandit, Rustler®, Stampede® series)**
3678A **Wheelie bar, assembled (green) (fits Slash, Bandit, Rustler®, Stampede® series)**
3678P **Wheelie bar, assembled (pink) (fits Slash, Bandit, Rustler®, Stampede® series)**
4976 **Wheels (4)/ axles (2) (for T-Maxx®/E-Maxx wheelie bar)**
5186A **Wheels, aluminum (blue-anodized) (2)/ 5x8mm ball bearings (4)/ axles (2)/ rubber tires (2)**
5186 **Wheels, aluminum (red-anodized) (2)/ 5x8mm ball bearings (4)/ axles (2)/ rubber tires (2)**

Chassis & Attachments

3725X **Battery expansion kit (allows for installation of taller multi-cell battery packs)**
3727 **Battery hold-down plate (black)/ metal posts (2)/body clips (2)**
3727A Battery hold-down plate (grey) / metal posts (2) / body clips (2)
3628 Box, receiver (sealed)/ foam pad/2.5x8mm CS (4)/ 3x10mm CS (2)
2735 Bumper (front)
2735P **Bumper (front) (pink)**
3722X **Lower chassis (black) (166mm long battery compartment) (fits both flat and hump style battery packs) (use only with #3725R ESC mounting plate)**
3722R Lower chassis (grey) (166mm long battery compartment) (fits both flat and hump style battery packs) (use only with #3725R ESC mounting plate)
3725R Mounting plate, electronic speed control (for installation of XL-5/VXL into Bandit or Rustler®)
3629 Seal kit, receiver box (includes o-ring, seals, and silicone grease)
5185 **Tires, rubber (2) (fits Traxxas® wheelie bar wheels)**
3723 **Upper chassis (black)**
3723A Upper chassis (grey)
4974 **Wheelie bar arm (1)/ connector (1)/ 3x12 SS (hex drive) (4)**
3677A **Wheelie bar mount (1) / hardware (green)**
3677P **Wheelie bar mount (1) / hardware (pink)**
3677 **Wheelie bar mount (1)/ hardware (black)**
3677X **Wheelie bar mount (1)/ hardware (blue)**
3678 **Wheelie bar, assembled (black) (fits Slash, Bandit, Rustler®, Stampede® series)**
3678X **Wheelie bar, assembled (blue) (fits Slash, Bandit, Rustler®, Stampede® series)**
3678A **Wheelie bar, assembled (green) (fits Slash, Bandit, Rustler®, Stampede® series)**
3678P **Wheelie bar, assembled (pink) (fits Slash, Bandit, Rustler®, Stampede® series)**
4976 **Wheels (4)/ axles (2) (for T-Maxx®/E-Maxx wheelie bar)**
5186A **Wheels, aluminum (blue-anodized) (2)/ 5x8mm ball bearings (4)/ axles (2)/ rubber tires (2)**
5186 **Wheels, aluminum (red-anodized) (2)/ 5x8mm ball bearings (4)/ axles (2)/ rubber tires (2)**

Differential Components

2381X Main diff with steel ring gear/ side cover plate/ screws (Bandit, Stampede®, Rustler®)
2382 Planet gears (4)/ planet shafts (4)/ sun gears (2)/sun gear alignment shaft (1) all hardened steel
2388X Planetary gear differential with steel ring gear (complete) (fits Bandit, Stampede®, Rustler®)
5169 Screws, 2.6x8mm countersunk machine (6)
1647 Silicone grease

Driveline Components

5116 **Ball bearings, blue rubber sealed (5x11x4mm) (2)**
1675 Bushings, self-lubricating (5x11x4mm) (14)
4628R Differential output yokes, black (2)/ 3x5mm countersunk screws (2)/ screw pin (2)
4628X **Differential output yokes, hardened steel (w/ U-joints) (2)**
6828X **Differential output yokes, heavy duty (2)/ screw pin (2)**
1951R **Driveshafts, rear, steel-spline constant-velocity (complete assembly) (2) (fits 2WD Rustler/Stampede)**
1953 **Half shaft pro-pack (internal-splined (6)/ external-splined (6) (plastic shafts only)**
6752 **Half shaft, external splined (steel-spline constant-velocity) (1) (fits 2WD Rustler/Stampede)**
6751 **Half shaft, internal splined (steel-spline constant-velocity) (1)**
6850X **Half shafts, heavy duty (external splined (2)/ internal splined (2))/ metal u-joints (4)**
1951 Half shafts, long truck (external-splined (2) & internal-splined (2)/ metal U-joints (4)
6757 **Rebuild kit, steel-splined constant-velocity driveshafts (includes pins, dustboots, lube, and hardware)**
3752 Stub axle carriers (2) (requires 5x11x4mm bushings or bearings)
3652A **Stub axle carriers, Rustler®/Stampede®/Bandit (2), 6061-T6 aluminum (blue-anodized)/ 5x11mm ball bearings (4)**
3652G **Stub axle carriers, Rustler®/Stampede®/Bandit (2), 6061-T6 aluminum (green-anodized)/ 5x11mm ball bearings (4)**
3652P **Stub axle carriers, Rustler®/Stampede®/Bandit (2), 6061-T6 aluminum (pink-anodized)/ 5x11mm ball bearings (4)**
3652P **Stub axle carriers, Rustler®/Stampede®/Bandit (2), 6061-T6 aluminum (pink-anodized)/ 5x11mm ball bearings (4)**
3652X **Stub axle carriers, Rustler®/Stampede®/Bandit (2), 6061-T6 aluminum (red-anodized)/ 5x11mm ball bearings (4)**
2754 Stub axle pins (4)
6753 **Stub axle, rear, 5mm (steel-splined constant-velocity driveshaft) (1)**
2753X Stub axles, rear (2)
6853X **Stub axles, rear, heavy duty (2)/pins (2)**

Front Suspension & Steering

3637 Axles (front) (2)
2728 **Ball bearings (5x8x2.5mm) (2)**
5116 **Ball bearings, blue rubber sealed (5x11x4mm) (2)**
2545 Bellcrank bushings (plastic) (5x8x2.5mm) (4)
2530 **Bulkhead (front) (black)**
2530A Bulkhead (front) (grey)
1675 Bushings, self-lubricating (5x11x4mm) (14)
3632 Caster blocks (l&r) (30-degree)
3632A **Caster blocks, 30-degree, blue-anodized 6061-T6 aluminum (left & right)/ suspension screw pin (2)**
3632G **Caster blocks, 30-degree, green-anodized 6061-T6 aluminum (left & right)/ suspension screw pin (2)**
3632P **Caster blocks, 30-degree, pink-anodized 6061-T6 aluminum (left & right)/ suspension screw pin (2)**
3632X **Caster blocks, 30-degree, red-anodized 6061-T6 aluminum (left & right)/ suspension screw pin (2)**
1942 Rod ends (16 long & 4 short)/ hollow ball connectors (18)/ ball screws (2)
5525R **Rod ends, heavy duty (Jato®/Slayer) (8)**

RUSTLER® (37054-1/37054-4)

2742	Rod ends, long (6)/ hollow ball connectors (6)
5347	**Rod ends, Revo® (large) with hollow balls (12)**
2742X	Rod ends, short (6)/ hollow balls (6)
3744	Servo saver w/adapters
3639	Shock tower (front)
3736	Steering blocks, left & right (2) (requires 5x11x4mm bushings or bearings)
3636A	**Steering blocks, Rustler®/Stampede®/Bandit (2), 6061-T6 aluminum (blue-anodized)/ 5x11mm ball bearings (4)**
3636G	**Steering blocks, Rustler®/Stampede®/Bandit (2), 6061-T6 aluminum (green-anodized)/ 5x11mm ball bearings (4)**
3636P	**Steering blocks, Rustler®/Stampede®/Bandit (2), 6061-T6 aluminum (pink-anodized)/ 5x11mm ball bearings (4)**
3636X	**Steering blocks, Rustler®/Stampede®/Bandit (2), 6061-T6 aluminum (red-anodized)/ 5x11mm ball bearings (4)**
3631	Suspension arms (front) (2)
3631X	**Suspension arms, black, front, heavy duty (2)**
3631A	**Suspension arms, blue, front, heavy duty (2)**
3655P	**Suspension arms, blue, front/rear (left & right), heavy duty (2)**
3655R	**Suspension arms, front/rear (left & right), heavy duty (2)**
3631G	**Suspension arms, green, front, heavy duty (2)**
3655G	**Suspension arms, green, front/rear (left & right), heavy duty (2)**
3631T	**Suspension arms, orange, front, heavy duty (2)**
3655T	**Suspension arms, orange, front/rear (left & right), heavy duty (2)**
3631R	**Suspension arms, red, front, heavy duty (2)**
3655L	**Suspension arms, red, front/rear (left & right), heavy duty (2)**
3631L	**Suspension arms, white, front, heavy duty (2)**
3655A	**Suspension arms, white, front/rear (left & right), heavy duty (2)**
3740	**Suspension pins, 2.5x29mm (king pins) w/ e-clips (2) (strengthens caster blocks)**
2640	**Suspension pins, 44mm (2) w/ E-clips (Use with tie bar to strengthen front bulkhead)**
3640	**Suspension screw pin set, steel (hex drive) (requires part #2640 for a complete suspension pin set) (Bandit, Rustler®, Stampede®)**
2537	Threaded rods (20/25/44mm 1 ea.)/ (1) 12mm set screw
2532	**Tie bar, fiberglass (requires suspension pins, part# 2640)**
3737A	**Turnbuckle, aluminum (blue-anodized), camber link, front, 39mm (1)(assembled w/rod ends)/ hollow balls (2) (See part 3741A for complete camber link set)**
3737	**Turnbuckle, aluminum (red-anodized), camber link, front, 39mm (1) (assembled w/rod ends)/ hollow balls (2)(See part 3741X for complete camber link set)**
3139	Turnbuckles (62mm) (front tie rods) (2)
3741A	**Turnbuckles, aluminum (blue-anodized), camber links, front, 39mm (2), rear, 49mm (2) (assembled w/rod ends & hollow balls)/ wrench**
3139A	**Turnbuckles, aluminum (blue-anodized), toe links, 59mm (2) (assembled w/ rod ends & hollow balls) (requires 5mm aluminum wrench #5477)**
3741X	**Turnbuckles, aluminum (red-anodized), camber links, front, 39mm (2), rear, 49mm (2) (assembled w/ rod ends & hollow balls)/wrench**
3139X	**Turnbuckles, aluminum (red-anodized), toe links, 59mm (2) (assembled with rod ends & hollow balls) (requires 5mm aluminum wrench #5477)**
3644	**Turnbuckles, camber link, 39mm (69mm center to center) (assembled with rod ends and hollow balls) (1 left, 1 right)**
3745	**Turnbuckles, toe link, 59mm (78mm center to center) (2) (assembled with rod ends and hollow balls)**

Hardware

1926	**Antenna caps, vinyl (2)/ antenna spool**
1726	Antenna, tube (1)/ vinyl antenna cap (1)/ wire retainer (1)
3642	**Shoulder screws, Ultra Shocks (3x12) (6)**
1552	**Motor screws (3x8mm hex cap) (6)/washers (6)/ wrench**
2545	Bellcrank bushings (plastic) (5x8x2.5mm) (4)
1834	Body clips (12) (standard size)
3934	**Body clips, heavy duty (12)**
1589	Double-sided adhesive tape (25mm x 25mm) (2)
3647	Nuts, 4mm flanged nylon locking (steel, serrated) (8)
1747	Nuts, 4mm nylon locking (10)
1747R	**Nuts, aluminum, flanged, serrated (4mm) (blue-anodized) (4)**
1747G	**Nuts, aluminum, flanged, serrated (4mm) (green-anodized) (4)**
1747P	**Nuts, aluminum, flanged, serrated (4mm) (pink-anodized) (4)**
1747P	**Nuts, aluminum, flanged, serrated (4mm) (pink-anodized) (4)**
1747A	**Nuts, aluminum, flanged, serrated (4mm) (red-anodized) (4)**
1985	PTFE-coated washers, 5x8x0.5mm (20) (use with ball bearings)
1942	Rod ends (16 long & 4 short)/ hollow ball connectors (18)/ ball screws (2)
5525R	**Rod ends, heavy duty (Jato®/Slayer) (8)**
2742	Rod ends, long (6)/ hollow ball connectors (6)
5347	**Rod ends, Revo® (large) with hollow balls (12)**
2742X	Rod ends, short (6)/ hollow balls (6)
3739	Screw pin set (Rustler®/ Bandit/ Stampede®)
3229	Screws, 2.5x10mm cap-head machine (hex drive) (6)
3965	Screws, 2.5x8mm cap-head machine (6)
2587	Screws, 3x10mm cap-head machine (6) (no washer)
2676	Screws, 3x12mm roundhead self-tapping (6)
3186	Screws, 3x12mm washerhead machine (6)
2649	Screws, 3x15mm countersunk self-tapping (6)
3187	Screws, 3x15mm washerhead machine (6)
3185X	Screws, 3x8mm washerhead machine (large head for motor mount) (6)
3290	Screws, 3x8mm washerhead self-tapping (6)
2548	Screws, 4x12mm countersunk machine (100-degree) (6)
3167	Screws, 4x15mm countersunk machine (6)
2743	Set (grub) screws, 3mm hardened (12)
5529	Shim set, 3x7x1mm (2), 3x6x0.5mm (4), 3x7x2mm (2)/ hollow balls, captured (4)
3742	Shoulder screws, steering bellcranks (3x30mm cap-head machine) (2)/ draglink shoulder screws (chrome) (2)
2754	Stub axle pins (4)
3740	Suspension pins, 2.5x29mm (king pins) w/ e-clips (2) (strengthens caster blocks)
2537	Threaded rods (20/25/44mm 1 ea.)/ (1) 12mm set screw
2746	**Washers, 3x6mm metal (12)**

Motors & Electronics

1726	Antenna, tube (1)/ vinyl antenna cap (1)/ wire retainer (1)
1552	**Motor screws (3x8mm hex cap) (6)/washers (6)/ wrench**
2260	**BEC assembly (complete)**
3790	Gear adapter, fixed
2072A	**Gear set (for 2070, 2075 servos)**
2252	**Gear set, metal (for 2250, 2255 servos)**
1275	**Motor, Stinger (20-turn, 540 size) (requires 19-tooth pinion with factory installed spur gear on models originally equipped with the Titan 12T)**
3785	Motor, Titan® 12T (12-Turn, 550 size)
3351R	**Motor, Velineon® 3500, brushless (assembled with 12-gauge wire and gold-plated bullet connectors)**
3725R	Mounting plate, electronic speed control (for installation of XL-5/VXL into Bandit or Rustler®)
2254	**Servo case, aluminum (blue-anodized) (middle) (for 2250 servo)**
2253	**Servo case, aluminum (red-anodized) (middle) (for 2255 servo)**
2251	**Servo case, plastic (top, middle, bottom)/ gaskets/ hardware (for 2250, 2255 servos)**
2074	Servo case/gaskets (for 2056 and 2075 waterproof servos)
2053	Servo gears (for 2055, 2056 servos)
2075R	**Servo, digital high-speed, metal gear (ball bearing), waterproof**
2075	**Servo, digital high-torque (ball bearing), waterproof**
2250	**Servo, digital high-torque 330 coreless, metal gear (ball bearing), waterproof**
2255	**Servo, digital high-torque 400 brushless, metal gear (ball bearing), waterproof**
2075X	**Servo, digital high-torque, metal gear (ball bearing), waterproof**
2056	Servo, high-torque, waterproof (blue case)
3350R	**Velineon® VXL-3s Brushless Power System, waterproof (includes VXL-3s waterproof ESC, Velineon 3500 motor, and speed control mounting plate (part #3725R))**
3355R	**Velineon® VXL-3s Electronic Speed Control, waterproof (brushless) (fwd/rev/brake)**
3018R	XL-5 Electronic Speed Control, waterproof (land version, low-voltage detection, fwd/rev/brake)

Radio System, Batteries & Chargers

2842X	**5000mAh 7.4v 2-Cell 25C LiPo Battery**
2843X	**5800mAh 7.4v 2-Cell 25C LiPo Battery**
2869X	**7600mAh 7.4v 2-Cell 25C LiPo Battery**
2976	**AC to DC converter, 40W**
2938X	**Adapter, Traxxas® iD® LiPo battery (adapts Traxxas iD batteries to separate balance ports)**
1726	Antenna, tube (1)/ vinyl antenna cap (1)/ wire retainer (1)
2943	**Battery charge indicators (green (4), blue (4), grey (4))**
6548	Battery door, transmitter (replacement for #6516, 6517, 6528, 6529, 6530 transmitters)
2914	**Battery, Power Cell AA Alkaline (4)**
2923X	**Battery, Power Cell, 3000mAh (NiMH, 7-C flat, 8.4V)**
2926X	**Battery, Power Cell, 3000mAh (NiMH, 7-C hump, 8.4V)**
2942X	**Battery, Series 3 Power Cell, 3300mAh (NiMH, 6-C flat, 7.2V)**
2940X	**Battery, Series 3 Power Cell, 3300mAh (NiMH, 7-C flat, 8.4V)**
2941X	**Battery, Series 3 Power Cell, 3300mAh (NiMH, 7-C hump, 8.4V)**
2952X	**Battery, Series 4 Power Cell, 4200mAh (NiMH, 6-C flat, 7.2V)**
2950X	**Battery, Series 4 Power Cell, 4200mAh (NiMH, 7-C flat, 8.4V)**
2951X	**Battery, Series 4 Power Cell, 4200mAh (NiMH, 7-C hump, 8.4V)**
2960X	**Battery, Series 5 Power Cell, 5000mAh (NiMH, 7-C flat, 8.4V)**

REV. 201002 1249

2961X **Battery, Series 5 Power Cell, 5000mAh (NiMH, 7-C hump, 8.4V)**
2984 **Battery/charger completer pack (includes #2969 2-amp NiMH peak detecting AC charger (1), #2926X 3000mAh 8.4V 7-cell NiMH battery (1))**
2992 **Battery/charger completer pack (includes #2970 iD® charger (1), #2843X 5800mAh 7.4V 2-cell 25C LiPo battery (1))**
2260 **BEC assembly (complete)**
2975 **Charger, DC, 4 amp (6 - 7 cell, 7.2 - 8.4 volt, NiMH)**
2972 **Charger, EZ-Peak® Dual, 100W, NiMH/LiPo with iD® Auto Battery Identification**
2973 **Charger, EZ-Peak® Live Dual, 200W, NiMH/LiPo with iD® Auto Battery Identification**
2971 **Charger, EZ-Peak® Live, 100W, NiMH/LiPo with iD® Auto Battery Identification**
2970 **Charger, EZ-Peak® Plus, 4 amp, NiMH/LiPo with iD® Auto Battery Identification**
6525 **Communication link, telemetry expander**
6541 **Connector, power tap (with cable) (long)/ wire tie**
2978 **Fuse, charger, 5A (2) (for #2974, 2975, 2977)**
2072A **Gear set (for 2070, 2075 servos)**
2252 **Gear set, metal (for 2250, 2255 servos)**
2968X **LiPo cell voltage checker/balancer (includes #2938X adapter for Traxxas® iD® batteries)**
2968 **LiPo cell voltage checker/balancer (requires #2938X adapter for Traxxas® iD® batteries)**
6554 **Mount, telemetry expander (fits Bandit, Rustler®, Slash 2WD)**
6535 **Mount, temperature sensor (electric motors)/ wire tie/ thermal pad**
6519 Receiver, micro, TQ 2.4GHz (3-channel)
6518 **Receiver, micro, TQi 2.4GHz with telemetry (5-channel)**
6552 **Seal kit, expander box (includes o-ring, seals, and silicone grease)**
6526 **Sensor, auto-detectable, temperature**
6527 **Sensor, auto-detectable, voltage**
6520 **Sensor, RPM (long)/ 3x4mm BCS (2)/ 3x4 GS (1)**
6521 **Sensor, temperature and voltage (long)**
2254 **Servo case, aluminum (blue-anodized) (middle) (for 2250 servo)**
2253 **Servo case, aluminum (red-anodized) (middle) (for 2255 servo)**
2251 **Servo case, plastic (top, middle, bottom)/ gaskets/ hardware (for 2250, 2255 servos)**
2074 Servo case/gaskets (for 2056 and 2075 waterproof servos)
2053 Servo gears (for 2055, 2056 servos)
2075R **Servo, digital high-speed, metal gear (ball bearing), waterproof**
2075 **Servo, digital high-torque (ball bearing), waterproof**
2250 **Servo, digital high-torque 330 coreless, metal gear (ball bearing), waterproof**
2255 **Servo, digital high-torque 400 brushless, metal gear (ball bearing), waterproof**
2075X **Servo, digital high-torque, metal gear (ball bearing), waterproof**
2056 Servo, high-torque, waterproof (blue case)
6553X **Telemetry expander 2.0 and GPS module 2.0, TQi radio system**
6550X **Telemetry expander 2.0, TQi radio system (for use only with #6551X GPS module)**
6551X **Telemetry GPS module 2.0, TQi radio system (for use only with #6550X telemetry expander)**
6538 **Telemetry trigger magnet holders, spur gear/ magnet, 5x2mm (1)/ 3x8mm CCS (3)/ 3x10mm CCS (3)**
6540 **Telemetry trigger magnet, 5X2mm (1)**
6509R **TQi 2.4 GHz High Output radio system, 2-channel, Traxxas Link™ enabled, TSM (2-ch transmitter, 5-ch micro receiver)**
6507R **TQi 2.4 GHz High Output radio system, 4-channel with Traxxas Link™ Wireless Module, TSM (4-ch transmitter, 5-ch micro receiver)**
6516 Transmitter, TQ 2.4GHz, 2-channel (transmitter only)
6528 **Transmitter, TQi Traxxas Link™ enabled, 2.4GHz high output, 2-channel (transmitter only)**
6529 **Transmitter, TQi Traxxas Link™ enabled, 2.4GHz high output, 3-channel (transmitter only)**
6530 **Transmitter, TQi Traxxas Link™ enabled, 2.4GHz high output, 4-channel (transmitter only)**
6511 **Traxxas Link™ Wireless Module**
6537 **Wire retainers, gear cover/ 3x4mm BCS (2)**
3018R XL-5 Electronic Speed Control, waterproof (land version, low-voltage detection, fwd/rev/brake)

Ready-To-Race Model

37054-4 Rustler®: 1/10 Scale Stadium Truck with TQ 2.4 GHz radio system

Rear Suspension

5116 **Ball bearings, blue rubber sealed (5x11x4mm) (2)**
1675 Bushings, self-lubricating (5x11x4mm) (14)
3739 Screw pin set (Rustler®/ Bandit/ Stampede®)
3638 Shock tower (rear)
3752 Stub axle carriers (2) (requires 5x11x4mm bushings or bearings)
3652A **Stub axle carriers, Rustler®/Stampede®/Bandit (2), 6061-T6 aluminum (blue-anodized)/ 5x11mm ball bearings (4)**
3652G **Stub axle carriers, Rustler®/Stampede®/Bandit (2), 6061-T6 aluminum (green-anodized)/ 5x11mm ball bearings (4)**
3652P **Stub axle carriers, Rustler®/Stampede®/Bandit (2), 6061-T6 aluminum (pink-anodized)/ 5x11mm ball bearings (4)**
3652P **Stub axle carriers, Rustler®/Stampede®/Bandit (2), 6061-T6 aluminum (pink-anodized)/ 5x11mm ball bearings (4)**
3652X **Stub axle carriers, Rustler®/Stampede®/Bandit (2), 6061-T6 aluminum (red-anodized)/ 5x11mm ball bearings (4)**
2753X Stub axles, rear (2)
3655P **Suspension arms, blue, front/rear (left & right), heavy duty (2)**
3655R **Suspension arms, front/rear (left & right), heavy duty (2)**
3655G **Suspension arms, green, front/rear (left & right), heavy duty (2)**
3655X Suspension arms, left & right
3655T **Suspension arms, orange, front/rear (left & right), heavy duty (2)**
3655L **Suspension arms, red, front/rear (left & right), heavy duty (2)**
3655A **Suspension arms, white, front/rear (left & right), heavy duty (2)**
3640 **Suspension screw pin set, steel (hex drive) (requires part #2640 for a complete suspension pin set) (Bandit, Rustler®, Stampede®)**

Shocks (Pro-level Aluminum)

2664 **Big Bore shock cylinder (long) (1)**
2666 **Big Bore shock cylinder (XX-long) (1)**
5862 **Big Bore shocks (hard-anodized & PTFE-coated T6 aluminum) (assembled with TiN shafts and springs) (front & rear) (4)**
2660 **Big Bore shocks (long) (hard-anodized & PTFE-coated T6 aluminum) (assembled with TiN shafts) w/o springs (front) (2)**
2662 **Big Bore shocks (XX-long) (hard-anodized & PTFE-coated T6 aluminum) (assembled with TiN shafts) w/o springs (rear) (2)**
2669 **Piston head set (2-hole (2)/ 3-hole (2))/ shock mounting bushings & washers (2) (Big Bore Shocks)**
2362 **Rebuild kit, Ultra shocks (for 2 shocks)**
1942 Rod ends (16 long & 4 short)/ hollow ball connectors (18)/ ball screws (2)
2742X Rod ends, short (6)/ hollow balls (6)
2667 **Shock caps, aluminum (Big Bore Shocks) (2)**
1664T **Shock shafts, hardened steel, titanium nitride coated (long) (2)**
2656T **Shock shafts, hardened steel, titanium nitride coated (xx-long) (2)**
1664 Shock shafts, steel, chrome finish (long) (2)
2656 Shock shafts, steel, chrome finish (xx-long) (2)
1765 Silicone diaphragms (4)
1666 Silicone shock oil (30 wt)
2668 **Spring retainers, upper & lower (2)/ spring pre-load spacers: 1mm (4)/ 1.5mm (2)/ 2mm (2)/ 4mm (2)/ 8mm (2) (Big Bore Shocks)**
5860 **Springs, front (white) (progressive rate) (2) (fits #5862 aluminum Big Bore shocks)**
5859 **Springs, rear (white) (progressive rate) (2) (fits #5862 aluminum Big Bore shocks)**

Shocks (Ultra Shocks)

3642 **Shoulder screws, Ultra Shocks (3x12) (6)**
3765A Body, Ultra Shock(s) (long) (grey) (2)
3766A Body, Ultra Shock(s) (XXL) (grey) (2)
2362 **Rebuild kit, Ultra shocks (for 2 shocks)**
1942 Rod ends (16 long & 4 short)/ hollow ball connectors (18)/ ball screws (2)
2742X Rod ends, short (6)/ hollow balls (6)
3767 **Shock caps (2)/ shock bottoms (2)**
8361 Shock caps (black) (4) (assembled with hollow balls)
3767A **Shock caps, aluminum (blue-anodized) (4) (fits all Ultra Shocks)**
3767G **Shock caps, aluminum (green-anodized) (4) (fits all Ultra Shocks)**
3767P **Shock caps, aluminum (pink-anodized) (4) (fits all Ultra Shocks)**
3767X **Shock caps, aluminum (red-anodized) (4) (fits all Ultra Shocks)**
1664T **Shock shafts, hardened steel, titanium nitride coated (long) (2)**
2656T **Shock shafts, hardened steel, titanium nitride coated (xx-long) (2)**
1664 **Shock shafts, steel, chrome finish (long) (2)**
2656 Shock shafts, steel, chrome finish (xx-long) (2)
1765 Silicone diaphragms (4)
1666 Silicone shock oil (30 wt)
3769 Spring pre-load spacers: 1mm (4)/ 2mm (2)/ 4mm (2)/ 8mm (2)
3768 Spring retainers, upper & lower (2)/ piston head set (2-hole (2)/ 3-hole (2))
2458 **Springs, front (black) (2)**
3758 **Springs, front (black) (2)**
3758T **Springs, front (blue) (2)**
3758A **Springs, front (green) (2)**
2458P **Springs, front (pink) (2)**

RUSTLER® (37054-1/37054-4)

3758R **Springs, front (red) (2)**
2458A Springs, front (white) (2)
3758X **Springs, front (white) (2)**
3757 **Springs, rear (black) (2)**
3757T **Springs, rear (blue) (2)**
3757A **Springs, rear (green) (2)**
3757P **Springs, rear (pink) (2)**
3757X Springs, rear (white) (2)
4957 **Springs, red (for Ultra Shocks only) (2.5 rate) (f/r) (2)**
3760 **Ultra Shocks (black) (long) (complete w/ spring pre-load spacers & springs) (front) (2)**
3762 **Ultra Shocks (black) (xx-long) (complete w/ spring pre-load spacers & springs) (rear) (2)**
3760A Ultra Shocks (grey) (long) (complete w/ spring pre-load spacers & springs) (2)
3762A Ultra Shocks (grey) (xx-long) (complete w/ spring pre-load spacers & springs) (rear) (2)

Slipper Clutch Components

3793 Input shaft (slipper shaft) / spring pin
5552X Rebuild kit, slipper clutch (steel disc/ friction pads (3)/ spring (2)/ pin/ 4.0mm NL (1)/ 5.0mm NL (1))
2554 Screws, 3x6mm cap-head machine (hex drive) (6)
5556 Slipper pressure plate & hub (aluminum alloy)

Spur Gears & Pinion Gears

3790 Gear adapter, fixed
2416 Gear, 16-T pinion (48-pitch) / set screw
1918 **Gear, 18-T pinion (48-pitch) / set screw**
2419 **Gear, 19-T pinion (48-pitch) / set screw**
2423 **Gear, 23-T pinion (48-pitch) / set screw**
4725 **Gear, pinion (25-tooth) (48-pitch) / set screw**
4728 **Gear, pinion (28-tooth) (48-pitch)/ set screw**
4676 **Spur gear, 76-tooth (48-pitch) (for models with Torque-Control slipper clutch)**
4683 **Spur gear, 83-tooth (48-pitch) (for models with Torque-Control slipper clutch)**
4686 **Spur gear, 86-tooth (48-pitch) (for models with Torque-Control slipper clutch)**
4690 Spur gear, 90-tooth (48-pitch) (for models with Torque-Control slipper clutch)

Steering Components

2728 **Ball bearings (5x8x2.5mm) (2)**
5114 **Ball bearings, blue rubber sealed (5x8x2.5mm) (2)**
2545 Bellcrank bushings (plastic) (5x8x2.5mm) (4)
1942 Rod ends (16 long & 4 short)/ hollow ball connectors (18)/ ball screws (2)
2742 Rod ends, long (6)/ hollow ball connectors (6)
5347 **Rod ends, Revo® (large) with hollow balls (12)**
2742X Rod ends, short (6)/ hollow balls (6)
3744 Servo saver w/adapters
3742 Shoulder screws, steering bellcranks (3x30mm cap-head machine) (2)/ draglink shoulder screws (chrome) (2)
3743 Steering bellcranks (l&r)/ draglink
3743A **Steering bellcranks, drag link (blue-anodized 6061-T6 aluminum)/ 5x8mm ball bearings (4)/ hardware (assembled)**
3743G **Steering bellcranks, drag link (green-anodized 6061-T6 aluminum)/ 5x8mm ball bearings (4)/ hardware (assembled)**
3743P **Steering bellcranks, drag link (pink-anodized 6061-T6 aluminum)/ 5x8mm ball bearings (4)/ hardware (assembled)**
3743X **Steering bellcranks, drag link (red-anodized 6061-T6 aluminum)/ 5x8mm ball bearings (4)/ hardware (assembled)**
6845X **Steering bellcranks/ servo saver/ servo saver spring/ servo spring retainer/servo horn, steering**
2537 Threaded rods (20/25/44mm 1 ea.)/ (1) 12mm set screw
3139 Turnbuckles (62mm) (front tie rods) (2)
3139A **Turnbuckles, aluminum (blue-anodized), toe links, 59mm (2) (assembled w/ rod ends & hollow balls) (requires 5mm aluminum wrench #5477)**
3139X **Turnbuckles, aluminum (red-anodized), toe links, 59mm (2) (assembled with rod ends & hollow balls) (requires 5mm aluminum wrench #5477)**
3745 **Turnbuckles, toe link, 59mm (78mm center to center) (2) (assembled with rod ends and hollow balls)**

Suspension Linkage

3642 **Shoulder screws, Ultra Shocks (3x12) (6)**
3641A Camber link set (plastic / non-adjustable) (front & rear) (grey)
3641 **Camber link set (plastic/ non-adjustable) (front & rear) (black)**
1942 Rod ends (16 long & 4 short)/ hollow ball connectors (18)/ ball screws (2)
5525R **Rod ends, heavy duty (Jato®/Slayer) (8)**
2742 Rod ends, long (6)/ hollow ball connectors (6)
5347 **Rod ends, Revo® (large) with hollow balls (12)**
2742X Rod ends, short (6)/ hollow balls (6)
3739 Screw pin set (Rustler®/ Bandit/ Stampede®)
3740 **Suspension pins, 2.5x29mm (king pins) w/ e-clips (2) (strengthens caster blocks)**
2637 **Suspension pins, 31.5mm, chrome (2) w/ E-clips (4)**
2640 **Suspension pins, 44mm (2) w/ E-clips (Use with tie bar to strengthen front bulkhead)**
3640 **Suspension screw pin set, steel (hex drive) (requires part #2640 for a complete suspension pin set) (Bandit, Rustler®, Stampede®)**
2537 Threaded rods (20/25/44mm 1 ea.)/ (1) 12mm set screw
3737A **Turnbuckle, aluminum (blue-anodized), camber link, front, 39mm (1)(assembled w/rod ends)/ hollow balls (2) (See part 3741A for complete camber link set)**
3738A **Turnbuckle, aluminum (blue-anodized), camber link, rear, 49mm (1) (assembled w/ rod ends & hollow balls) (See part 3741A for complete camber link set)**
3737 **Turnbuckle, aluminum (red-anodized), camber link, front, 39mm (1) (assembled w/rod ends)/ hollow balls (2)(See part 3741X for complete camber link set)**
3738 **Turnbuckle, aluminum (red-anodized), camber link, rear, 49mm (1) (assembled with rod ends & hollow balls) (See part 3741X for complete camber link set)**
1937 **Turnbuckles (54mm) (2)/ 3x6x4mm aluminum spacers (rear camber links) (requires #2742 rod ends)**
3139 Turnbuckles (62mm) (front tie rods) (2)
2336 **Turnbuckles, 78mm (optional rear camber rods) (2)**
3741A **Turnbuckles, aluminum (blue-anodized), camber links, front, 39mm (2), rear, 49mm (2) (assembled w/rod ends & hollow balls)/ wrench**
3139A **Turnbuckles, aluminum (blue-anodized), toe links, 59mm (2) (assembled w/ rod ends & hollow balls) (requires 5mm aluminum wrench #5477)**
3741X **Turnbuckles, aluminum (red-anodized), camber links, front, 39mm (2), rear, 49mm (2) (assembled w/ rod ends & hollow balls)/wrench**
3139X **Turnbuckles, aluminum (red-anodized), toe links, 59mm (2) (assembled with rod ends & hollow balls) (requires 5mm aluminum wrench #5477)**
3644 **Turnbuckles, camber link, 39mm (69mm center to center) (assembled with rod ends and hollow balls) (1 left, 1 right)**
3643 **Turnbuckles, camber link, 49mm (82mm center to center) (assembled with rod ends and hollow balls) (1 left, 1 right)**
3745 **Turnbuckles, toe link, 59mm (78mm center to center) (2) (assembled with rod ends and hollow balls)**

Team Traxxas Items

2514 **Decal sheet, racing sponsors**
6160X **DVD, Maxx® Power! Full Throttle Action (sleeve)**
9950 **Official Team Traxxas® racing decal set (flag logo/ 6-color)**
9909 **Traxxas® racing banner, red & black (3x7 feet)**

Tires & Wheels

4608 **Ball Bearings (5x11x4mm) (6)/ 5x8x2.5mm (8)**
5116 Ball bearings, blue rubber sealed (5x11x4mm) (2)
5114 Ball bearings, blue rubber sealed (5x8x2.5mm) (2)
1675 Bushings, self-lubricating (5x11x4mm) (14)
5854 **Hub retainer, 17mm hubs, M4 X 0.7 (4) (use with #5853X, #6856X, #6469)**
3647 Nuts, 4mm flanged nylon locking (steel, serrated) (8)
1747R **Nuts, aluminum, flanged, serrated (4mm) (blue-anodized) (4)**
1747G **Nuts, aluminum, flanged, serrated (4mm) (green-anodized) (4)**
1747P **Nuts, aluminum, flanged, serrated (4mm) (pink-anodized) (4)**
1747P **Nuts, aluminum, flanged, serrated (4mm) (pink-anodized) (4)**
1985 PTFE-coated washers, 5x8x0.5mm (20) (use with ball bearings)
1647 Silicone grease
2754 Stub axle pins (4)
3770A **Tires & wheels, assembled, glued (2.8") (All-Star black chrome wheels, Alias® tires, foam inserts) (rear) (2) (TSM rated)**
3776 **Tires & wheels, assembled, glued (2.8") (All-Star black chrome wheels, paddle tires, foam inserts) (2WD electric rear) (2) (TSM rated)**
3771A **Tires & wheels, assembled, glued (2.8") (All-Star black chrome wheels, ribbed tires, foam inserts) (electric front) (2)**
3770 Tires & wheels, assembled, glued (2.8") (All-Star chrome wheels, Alias® tires, foam inserts) (2WD electric rear) (2)
3771 Tires & wheels, assembled, glued (2.8") (All-Star chrome wheels, ribbed tires, foam inserts) (electric front) (2)
6773G **Tires & wheels, assembled, glued (2.8") (RXT 4X4 green wheels, Talon Extreme tires, foam inserts) (4WD electric front/rear, 2WD electric front only) (2) (TSM rated)**

REV. 201002 1249

6774X **Tires & wheels, assembled, glued (2.8") (RXT black chrome wheels, Talon Extreme tires, foam inserts) (2WD electric rear) (2) (TSM rated)**
6773X **Tires & wheels, assembled, glued (2.8") (RXT black chrome wheels, Talon Extreme tires, foam inserts) (4WD electric front/rear, 2WD electric front only) (2) (TSM rated)**
6774 **Tires & wheels, assembled, glued (2.8") (RXT black wheels, Talon Extreme tires, foam inserts) (2WD electric rear) (2) (TSM rated)**
6773 **Tires & wheels, assembled, glued (2.8") (RXT black wheels, Talon Extreme tires, foam inserts) (4WD electric front/rear, 2WD electric front only) (2) (TSM rated)**
6774G **Tires & wheels, assembled, glued (2.8") (RXT green wheels, Talon Extreme tires, foam inserts) (2WD electric rear) (2) (TSM rated)**
6774A **Tires & wheels, assembled, glued (2.8") (RXT orange wheels, Talon Extreme tires, foam inserts) (2WD electric rear) (2) (TSM rated)**
6773A **Tires & wheels, assembled, glued (2.8") (RXT orange wheels, Talon Extreme tires, foam inserts) (4WD electric front/rear, 2WD electric front only) (2) (TSM rated)**
6774R **Tires & wheels, assembled, glued (2.8") (RXT satin chrome wheels, Talon Extreme tires, foam inserts) (2WD electric rear) (2) (TSM rated)**
6773R **Tires & wheels, assembled, glued (2.8") (RXT satin chrome wheels, Talon Extreme tires, foam inserts) (4WD electric front/rear, 2WD electric front only) (2) (TSM rated)**
3773A **Tires & wheels, assembled, glued (All Star black chrome wheels, Anaconda® tires, foam inserts) (2WD electric rear) (1 left, 1 right)**
3773 **Tires & wheels, assembled, glued (All Star chrome wheels, Anaconda® tires, foam inserts) (2WD electric rear) (1 left, 1 right)**
3776A **Tires & wheels, assembled, glued (All-Star black chrome wheels, Anaconda® tires, foam inserts) (nitro rear/ electric front) (1 left, 1 right)**
5576R **Tires & wheels, assembled, glued (All-Star chrome wheels, Anaconda® tires, foam inserts) (nitro rear/ electric front) (1 left, 1 right)**
5569 Tires, Alias 2.8" (rear) (2)/ foam inserts (2)
5578 **Tires, Anaconda® 2.8" (2)/ foam inserts (2)**
4791 **Tires, Pro-Trax mini-spiked 2.2" (rear) (2)**
4790R **Tires, Pro-Trax spiked 2.2" (soft-compound)(rear) (2)/ foam inserts (2)**
5563 Tires, Ribbed 2.8" (front) (2)/ foam inserts (2)
1654 Wheel hubs, hex (rear) (2)/ stub axle pins (2)
3654 Wheel hubs, hex (front) (tall offset) (2)/ axle pins (2.5x12mm) (2)
5853X **Wheel hubs, splined, 17mm, short (2), long (2)/wheel nuts, splined, 17mm (4) (blue-anodized)/ hub retainer M4x0.7 (4)/axle pin (4)/wrench, 5mm**
5353 **Wheel nuts, splined, 17mm (blue-anodized) (4)**
5480X **Wheel wrench, splined, 17mm**
3772A **Wheels, All-Star 2.8" (black chrome) (2WD electric rear)**
5576A **Wheels, All-Star 2.8" (black chrome) (nitro rear/ electric front) (2)**
3772 Wheels, All-Star 2.8" (chrome) (2WD electric rear)
5576 Wheels, All Star 2.8" (chrome) (2) (Rustler/Stampede front)
3673 **Wheels, chrome (2.2") (front) (2)**
3672 **Wheels, chrome (2.2") (rear) (2)**
3675 **Wheels, dyeable nylon 2.2 (front) (2)**
3674 **Wheels, dyeable nylon 2.2 (rear) (2)**
3774 **Wheels, Twin-Spoke 2.8" (chrome) (2WD electric rear) (2)**
5572 **Wheels, Twin-Spoke 2.8" (chrome) (nitro rear/ electric front) (2)**

Transmission Components

1552 **Motor screws (3x8mm hex cap) (6)/washers (6)/ wrench**
4607 **Ball bearings (5x11x4mm) (8)**
5116 Ball bearings, blue rubber sealed (5x11x4mm) (2)
3792 Cover, gear/ rubber gear cover plug/ 3x6 RM (2)
5478 **Flat wrench, 8mm (blue-anodized aluminum)**
3790 Gear adapter, fixed
3691 **Gearbox halves (l&r) (black) w/ idler gear shaft**
3691A Gearbox halves (l&r) (grey) w/ idler gear shaft
5148 Grease, white lithium
3696 Idler gear, steel (30-tooth)
3793 Input shaft (slipper shaft) / spring pin
2381X Main diff with steel ring gear/ side cover plate/ screws (Bandit, Stampede®, Rustler®)
2382 Planet gears (4)/ planet shafts (4)/ sun gears (2)/sun gear alignment shaft (1) all hardened steel
2388X Planetary gear differential with steel ring gear (complete) (fits Bandit, Stampede®, Rustler®)
5552X Rebuild kit, slipper clutch (steel disc/ friction pads (3)/ spring (2)/ pin/ 4.0mm NL (1)/ 5.0mm NL (1))
2554 Screws, 3x6mm cap-head machine (hex drive) (6)
3185X Screws, 3x8mm washerhead machine (large head for motor mount) (6)
1647 Silicone grease
5556 Slipper pressure plate & hub (aluminum alloy)
3195 Top drive gear, steel (22-tooth)

Traxxas Tools

3433X **Body reamer (aluminum handle)**
3433 **Body reamer (plastic handle)**
3436 **Cap, body reamer**
3432 **Scissors, curved tip**
3431 **Scissors, straight tip**
8712 **Speed Bit Essentials Set, hex and nut driver, 7-piece, includes premium handle (medium), travel pouch, hex drivers (straight: 1.5mm, 2.0mm, 2.5mm) and nut drivers (5.0mm, 5.5mm, 7.0mm, and 8.0mm), 1/4" drive**
8721 **Speed bit handle, medium (one piece)**
8720 **Speed bit handle, premium, large (rubber overmold)**
8722 **Speed bit handle, premium, medium (rubber overmold)**
8710 **Speed Bit Master Set, hex and nut driver, 13-piece, includes premium handle (medium), travel pouch, hex drivers (straight: 1.5mm, 2.0mm, 2.5mm, 3.0mm), (ball-end: 2.0mm, 2.5mm, 3.0mm), and nut drivers (4.00mm, 4.50mm, 5.00mm, 5.50mm, 7.00mm, 8.00mm),**
8711 **Speed Bit Master Set, hex driver, 7-piece straight and ball end, includes premium handle (medium), travel pouch, hex drivers (straight: 1.5mm, 2.0mm, 2.5mm, 3.0mm) (ball end: 2.0mm, 2.5mm, 3.0mm), 1/4" drive**
8719 **Speed Bit Master Set, nut driver, 6-piece, includes premium handle (medium), travel pouch, and nut drivers (4.0mm, 4.5mm, 5.0mm, 5.5mm, 7.0mm, 8.0mm), 1/4" drive**
8716 **Speed Bit Set, hex driver, 2-piece ball-end (2.0mm, 2.5mm), 1/4" drive**
8716X **Speed Bit Set, hex driver, 3-piece ball-end (2.0mm, 2.5mm, 3.0mm), 1/4" drive**
8715 **Speed Bit Set, hex driver, 3-piece straight (1.5mm, 2.0mm, 2.5mm), 1/4" drive**
8715X **Speed Bit Set, hex driver, 4-piece straight (1.5mm, 2.0mm, 2.5mm, 3.0mm), 1/4" drive**
3415 **Tool set with pouch (includes 1.5mm, 2.0mm, 2.5mm, 3.0mm, 3.5mm, 4mm drivers/ 4mm, 5mm, 5.5mm, 7mm and 8mm nut drivers/ 2mm, 4mm, and 5mm slotted screwdrivers/ #00 Phillips, #0 Phillips, and #1 Phillips screwdrivers/ 4mm and 8mm wrench/ driver handle**

Turnbuckles & Threaded Rods

1942 Rod ends (16 long & 4 short)/ hollow ball connectors (18)/ ball screws (2)
5525R **Rod ends, heavy duty (Jato®/Slayer) (8)**
2742 Rod ends, long (6)/ hollow ball connectors (6)
5347 **Rod ends, Revo® (large) with hollow balls (12)**
2742X Rod ends, short (6)/ hollow balls (6)
2537 Threaded rods (20/25/44mm 1 ea.)/ (1) 12mm set screw
3737A **Turnbuckle, aluminum (blue-anodized), camber link, front, 39mm (1)(assembled w/rod ends)/ hollow balls (2) (See part 3741A for complete camber link set)**
3738A **Turnbuckle, aluminum (blue-anodized), camber link, rear, 49mm (1) (assembled w/ rod ends & hollow balls) (See part 3741A for complete camber link set)**
3737 **Turnbuckle, aluminum (red-anodized), camber link, front, 39mm (1) (assembled w/rod ends)/ hollow balls (2)(See part 3741X for complete camber link set)**
3738 **Turnbuckle, aluminum (red-anodized), camber link, rear, 49mm (1) (assembled with rod ends & hollow balls) (See part 3741X for complete camber link set)**
1937 **Turnbuckles (54mm) (2)/ 3x6x4mm aluminum spacers (rear camber links)**
3139 Turnbuckles (62mm) (front tie rods) (2)
2336 **Turnbuckles, 78mm (optional rear camber rods) (2)**
3741A **Turnbuckles, aluminum (blue-anodized), camber links, front, 39mm (2), rear, 49mm (2) (assembled w/rod ends & hollow balls)/ wrench**
3139A **Turnbuckles, aluminum (blue-anodized), toe links, 59mm (2) (assembled w/ rod ends & hollow balls) (requires 5mm aluminum wrench #5477)**
3741X **Turnbuckles, aluminum (red-anodized), camber links, front, 39mm (2), rear, 49mm (2) (assembled w/ rod ends & hollow balls)/wrench**
3139X **Turnbuckles, aluminum (red-anodized), toe links, 59mm (2) (assembled with rod ends & hollow balls) (requires 5mm aluminum wrench #5477)**
3644 **Turnbuckles, camber link, 39mm (69mm center to center) (assembled with rod ends and hollow balls) (1 left, 1 right)**
3643 **Turnbuckles, camber link, 49mm (82mm center to center) (assembled with rod ends and hollow balls) (1 left, 1 right)**
3745 **Turnbuckles, toe link, 59mm (78mm center to center) (2) (assembled with rod ends and hollow balls)**

REV. 201002 1249

TSM
TRAXXAS STABILITY MANAGEMENT

RUSTLER® VXL BRUSHLESS

MODEL 37076-4

ELECTRIC POWERED 2WD
BRUSHLESS STADIUM TRUCK



70+ mph

HIGH-CAPACITY 3000 MAH 7-CELL BATTERY AND 4-AMP DC FAST CHARGER

VELINEON BRUSHLESS POWER SYSTEM

TQi 2.4GHz TRANSMITTER COMPATIBLE WITH TRAXXAS LINK WIRELESS MODULE

THE FASTEST RTR ELECTRIC STADIUM TRUCK YOU CAN BUY!

Rustler® VXL combines Velineon® extreme brushless horsepower with Traxxas Stability Management and the proven fun and durability that have made Rustler the number 1 selling electric stadium racer. The new Velineon Brushless Power System launches Rustler VXL to new heights with speed potential that reaches beyond 70mph! Hard-core, wheel-standing acceleration completely blows everything else away. Out of the box, Velineon is optimized to actually deliver the tire-melting horsepower, benchmark speed, and precision throttle response you expect from brushless. Best of all, it's brushless done the Traxxas way: wicked fast and easy to use. There's no tricky programming to figure out or a glossary of new vocabulary to learn. Just plug it in and...it works.

* With 3S LiPo (sold separately) and optional gearing

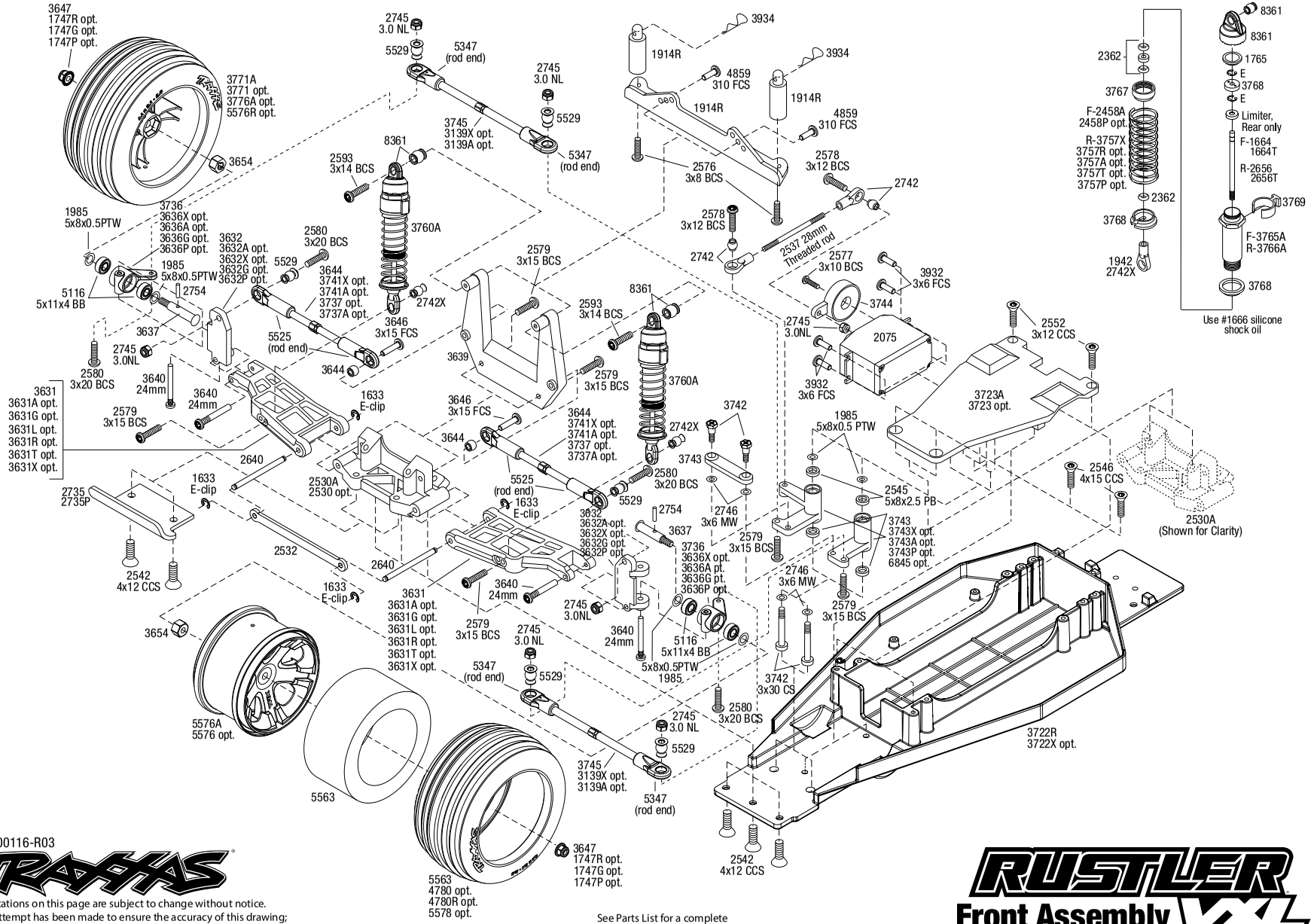

REV 200116-R03

TRAXXAS

Specifications on this page are subject to change without notice.
Every attempt has been made to ensure the accuracy of this drawing;
however, Traxxas cannot be held responsible for typographical or other errors.

See Parts List for a complete
listing of optional accessories.

RUSTLER VXL
Front Assembly

RUSTLER VXL® (37076-4)

EXPLODED VIEWS

RUSTLER VXL Chassis Assembly

REV 200116-R03

See Parts List for a complete listing of optional accessories.

Specifications on this page are subject to change without notice. Every attempt has been made to ensure the accuracy of this drawing; however, Traxxas cannot be held responsible for typographical or other errors.

RUSTLER VXL
Rear Assembly

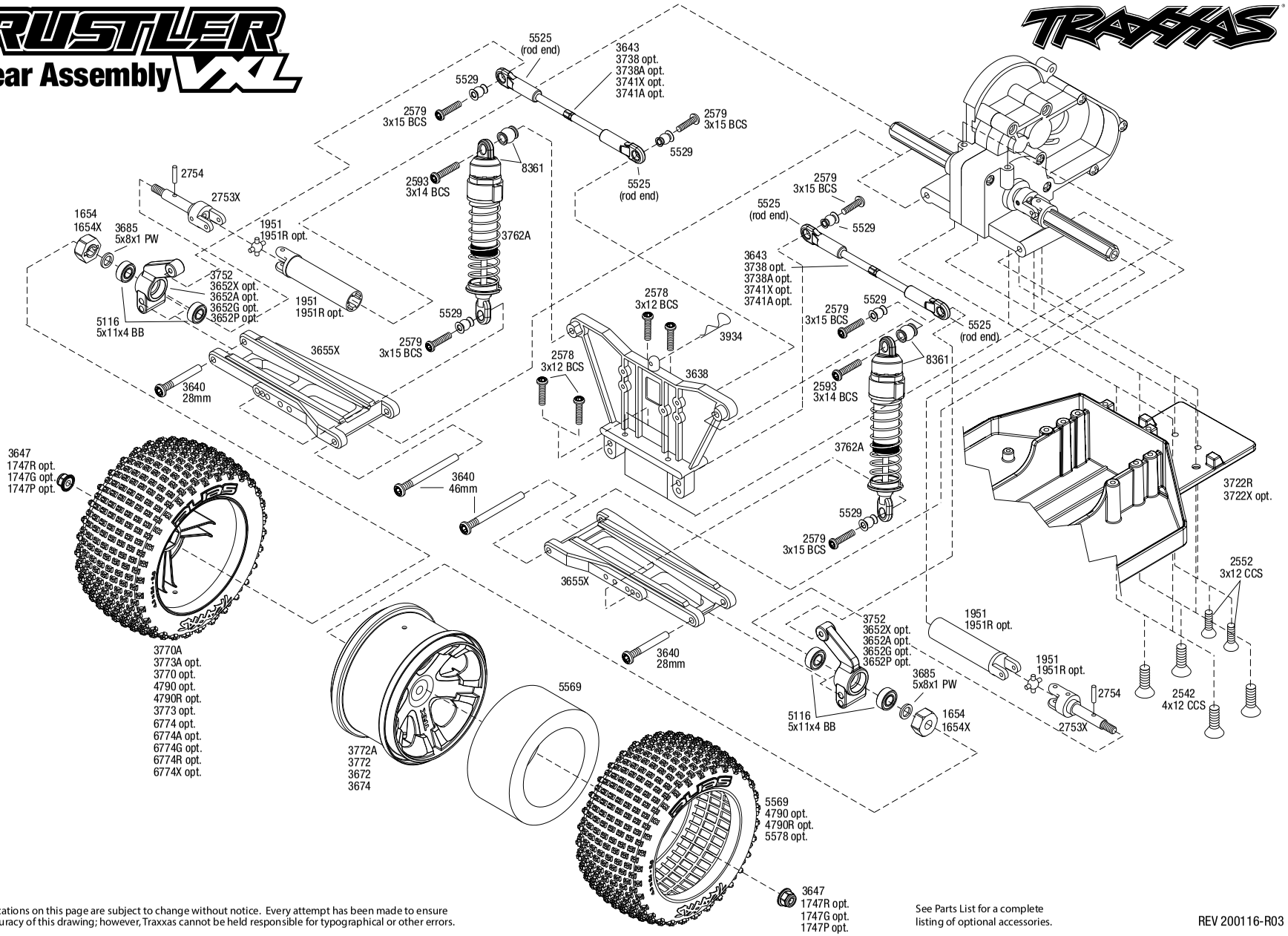

Specifications on this page are subject to change without notice. Every attempt has been made to ensure the accuracy of this drawing; however, Traxxas cannot be held responsible for typographical or other errors.

See Parts List for a complete listing of optional accessories.

REV 200116-R03

Questions? **Call toll-free, 1-888-TRAXXAS**

Questions? Call toll-free, 1-888-TRAXXAS

RUSTLER VXL
Transmission Assembly

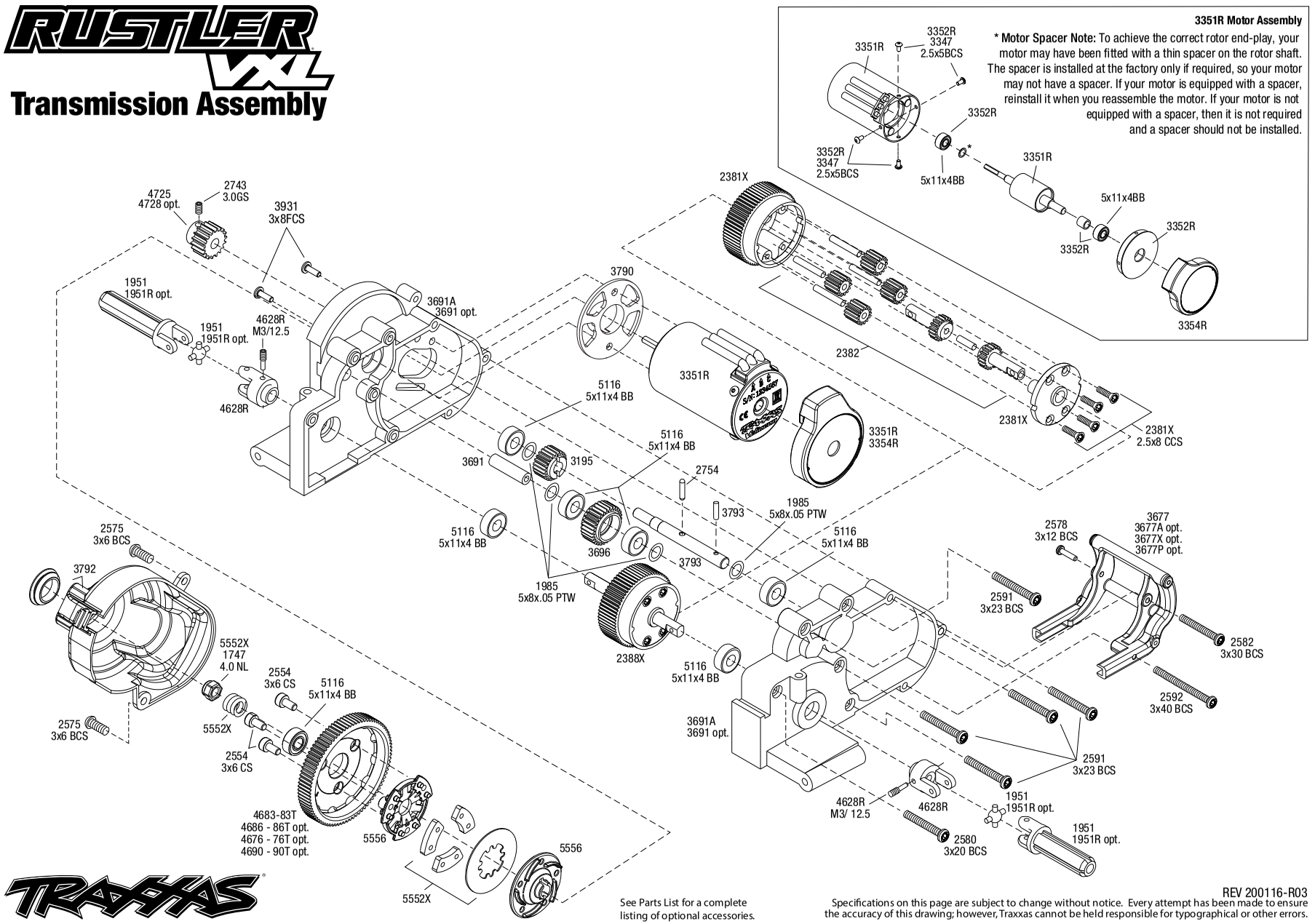

See Parts List for a complete listing of optional accessories.

REV 200116-R03

Specifications on this page are subject to change without notice. Every attempt has been made to ensure the accuracy of this drawing; however, Traxxas cannot be held responsible for typographical or other errors.

PARTS SHOWN IN BOLD ARE OPTIONAL ACCESSORIES.

Part categories and individual part listings are arranged alphabetically.

Bearings & Bushings

4607 Ball bearings (5x11x4mm) (8)
2728 Ball bearings (5x8x2.5mm) (2)
5116 Ball bearings, blue rubber sealed (5x11x4mm) (2)
5114 Ball bearings, blue rubber sealed (5x8x2.5mm) (2)
2545 Bellcrank bushings (plastic) (5x8x2.5mm) (4)
3934 Body clips, heavy duty (12)
1675 Bushings, self-lubricating (5x11x4mm) (14)
1985 PTFE-coated washers, 5x8x0.5mm (20) (use with ball bearings)

Body & Accessories

1926 Antenna caps, vinyl (2)/ antenna spool
1726 Antenna, tube (1)/ vinyl antenna cap (1)/ wire retainer (1)
1834 Body clips (12) (standard size)
1914R Body mount, front & rear (black)/ body posts, 52mm (2), 38mm (2), 25mm (2), 6.5mm (2)/ body post extensions (4)/ hardware
3614 Body mounts (front & rear)
1815 Body washers (8)
6716 Body washers, foam, 2mm (2)/ 3mm (2)/ 4mm (4)
3714 Body, Rustler® (clear, requires painting)/window, lights decal sheet/ wing and aluminum hardware
3719 Body, Rustler® VXL, ProGraphix® (replacement for the painted body. Graphics are printed, requires paint & final color application)/decal sheet/ wing and aluminum hardware
2514 Decal sheet, racing sponsors
3713R Decal sheets, Rustler® VXL
5185 Tires, rubber (2) (fits Traxxas® wheelie bar wheels)
4974 Wheelie bar arm (1)/ connector (1)/ 3x12 SS (hex drive) (4)
3677A Wheelie bar mount (1) / hardware (green)
3677P Wheelie bar mount (1) / hardware (pink)
3677 Wheelie bar mount (1)/ hardware (black)
3677X Wheelie bar mount (1)/ hardware (blue)
3678 Wheelie bar, assembled (black) (fits Slash, Bandit, Rustler®, Stampede® series)
3678X Wheelie bar, assembled (blue) (fits Slash, Bandit, Rustler®, Stampede® series)
3678A Wheelie bar, assembled (green) (fits Slash, Bandit, Rustler®, Stampede® series)
3678P Wheelie bar, assembled (pink) (fits Slash, Bandit, Rustler®, Stampede® series)
4976 Wheels (4)/ axles (2) (for T-Maxx®/E-Maxx wheelie bar)
5186A Wheels, aluminum (blue-anodized) (2)/ 5x8mm ball bearings (4)/ axles (2)/ rubber tires (2)
5186 Wheels, aluminum (red-anodized) (2)/ 5x8mm ball bearings (4)/ axles (2)/ rubber tires (2)

Chassis & Attachments

3725X Battery expansion kit (allows for installation of taller multi-cell battery packs)
3727 Battery hold-down plate (black)/ metal posts (2)/body clips (2)
3727A Battery hold-down plate (grey) / metal posts (2) / body clips (2)
3628 Box, receiver (sealed)/ foam pad/2.5x8mm CS (4)/ 3x10mm CS (2)
2735 Bumper (front)
2735P Bumper (front) (pink)
3722X Lower chassis (black) (166mm long battery compartment) (fits both flat and hump style battery packs) (use only with #3725R ESC mounting plate)
3722R Lower chassis (grey) (166mm long battery compartment) (fits both flat and hump style battery packs) (use only with #3725R ESC mounting plate)
3725R Mounting plate, electronic speed control (for installation of XL-5/VXL into Bandit or Rustler®)
3629 Seal kit, receiver box (includes o-ring, seals, and silicone grease)
5185 Tires, rubber (2) (fits Traxxas® wheelie bar wheels)
3723 Upper chassis (black)
3723A Upper chassis (grey)
4974 Wheelie bar arm (1)/ connector (1)/ 3x12 SS (hex drive) (4)
3677A Wheelie bar mount (1) / hardware (green)
3677P Wheelie bar mount (1) / hardware (pink)
3677 Wheelie bar mount (1)/ hardware (black)
3677X Wheelie bar mount (1)/ hardware (blue)
3678 Wheelie bar, assembled (black) (fits Slash, Bandit, Rustler®, Stampede® series)
3678X Wheelie bar, assembled (blue) (fits Slash, Bandit, Rustler®, Stampede® series)
3678A Wheelie bar, assembled (green) (fits Slash, Bandit, Rustler®, Stampede® series)
3678P Wheelie bar, assembled (pink) (fits Slash, Bandit, Rustler®, Stampede® series)
4976 Wheels (4)/ axles (2) (for T-Maxx®/E-Maxx wheelie bar)
5186A Wheels, aluminum (blue-anodized) (2)/ 5x8mm ball bearings (4)/ axles (2)/ rubber tires (2)
5186 Wheels, aluminum (red-anodized) (2)/ 5x8mm ball bearings (4)/ axles (2)/ rubber tires (2)

Differential Components

2381X Main diff with steel ring gear/ side cover plate/ screws (Bandit, Stampede®, Rustler®)
2382 Planet gears (4)/ planet shafts (4)/ sun gears (2)/sun gear alignment shaft (1) all hardened steel
2388X Planetary gear differential with steel ring gear (complete) (fits Bandit, Stampede®, Rustler®)
5169 Screws, 2.6x8mm countersunk machine (6)
1647 Silicone grease

Driveline Components

4628R Differential output yokes, black (2)/ 3x5mm countersunk screws (2)/ screw pin (2)
4628X Differential output yokes, hardened steel (w/ U-joints) (2)
6828X Differential output yokes, heavy duty (2)/ screw pin (2)
1951R Driveshafts, rear, steel-spline constant-velocity (complete assembly) (2) (fits 2WD Rustler/Stampede)
1953 Half shaft pro-pack (internal-splined (6)/ external-splined (6) (plastic shafts only)
6752 Half shaft, external splined (steel-spline constant-velocity) (1) (fits 2WD Rustler/Stampede)
6751 Half shaft, internal splined (steel-spline constant-velocity) (1)
6850X Half shafts, heavy duty (external splined (2)/ internal splined (2))/ metal u-joints (4)
1951 Half shafts, long truck (external-splined (2) & internal-splined (2)/ metal U-joints (4)
6757 Rebuild kit, steel-splined constant-velocity driveshafts (includes pins, dustboots, lube, and hardware)
3752 Stub axle carriers (2) (requires 5x11x4mm bearings)
3652A Stub axle carriers, Rustler®/Stampede®/Bandit (2), 6061-T6 aluminum (blue-anodized)/ 5x11mm ball bearings (4)
3652G Stub axle carriers, Rustler®/Stampede®/Bandit (2), 6061-T6 aluminum (green-anodized)/ 5x11mm ball bearings (4)
3652P Stub axle carriers, Rustler®/Stampede®/Bandit (2), 6061-T6 aluminum (pink-anodized)/ 5x11mm ball bearings (4)
3652X Stub axle carriers, Rustler®/Stampede®/Bandit (2), 6061-T6 aluminum (red-anodized)/ 5x11mm ball bearings (4)
2754 Stub axle pins (4)
6753 Stub axle, rear, 5mm (steel-splined constant-velocity driveshaft) (1)
2753X Stub axles, rear (2)
6853X Stub axles, rear, heavy duty (2)/pins (2)

Front Suspension & Steering

3637 Axles (front) (2)
2728 Ball bearings (5x8x2.5mm) (2)
2545 Bellcrank bushings (plastic) (5x8x2.5mm) (4)
2530 Bulkhead (front) (black)
2530A Bulkhead (front) (grey)
3632 Caster blocks (l&r) (30-degree)
3632A Caster blocks, 30-degree, blue-anodized 6061-T6 aluminum (left & right)/ suspension screw pin (2)
3632G Caster blocks, 30-degree, green-anodized 6061-T6 aluminum (left & right)/ suspension screw pin (2)
3632P Caster blocks, 30-degree, pink-anodized 6061-T6 aluminum (left & right)/ suspension screw pin (2)
3632X Caster blocks, 30-degree, red-anodized 6061-T6 aluminum (left & right)/ suspension screw pin (2)
5525R Rod ends, heavy duty (Jato®/Slayer) (8)
5347 Rod ends, Revo® (large) with hollow balls (12)
3646 Screws, 3x15mm flat-head machine (hex drive) (6)
3744 Servo saver w/adapters
3639 Shock tower (front)
3736 Steering blocks, left & right (2) (requires 5x11x4mm bearings)
3636A Steering blocks, Rustler®/Stampede®/Bandit (2), 6061-T6 aluminum (blue-anodized)/ 5x11mm ball bearings (4)
3636G Steering blocks, Rustler®/Stampede®/Bandit (2), 6061-T6 aluminum (green-anodized)/ 5x11mm ball bearings (4)
3636P Steering blocks, Rustler®/Stampede®/Bandit (2), 6061-T6 aluminum (pink-anodized)/ 5x11mm ball bearings (4)

RUSTLER VXL® (37076-4)

3636X	**Steering blocks, Rustler®/Stampede®/Bandit (2), 6061-T6 aluminum (red-anodized)/ 5x11mm ball bearings (4)**
3631	Suspension arms (front) (2)
3631X	**Suspension arms, black, front, heavy duty (2)**
3631A	**Suspension arms, blue, front, heavy duty (2)**
3631G	**Suspension arms, green, front, heavy duty (2)**
3631T	**Suspension arms, orange, front, heavy duty (2)**
3631R	**Suspension arms, red, front, heavy duty (2)**
3631L	**Suspension arms, white, front, heavy duty (2)**
2640	Suspension pins, 44mm (2) w/ e-clips
3640	Suspension screw pin set, steel (hex drive) (requires part #2640 for a complete suspension pin set) (Bandit, Rustler®, Stampede®)
2537	Threaded rods (20/25/44mm 1 ea.)/ (1) 12mm set screw
2532	Tie bar, fiberglass
3741A	**Turnbuckles, aluminum (blue-anodized), camber links, front, 39mm (2), rear, 49mm (2) (assembled w/rod ends & hollow balls)/ wrench**
3139A	**Turnbuckles, aluminum (blue-anodized), toe links, 59mm (2) (assembled w/ rod ends & hollow balls) (fits Rustler) (requires 5mm aluminum wrench #5477)**
3741X	**Turnbuckles, aluminum (red-anodized), camber links, front, 39mm (2), rear, 49mm (2) (assembled w/ rod ends & hollow balls)/wrench**
3139X	**Turnbuckles, aluminum (red-anodized), toe links, 59mm (2) (assembled with rod ends & hollow balls) (requires 5mm aluminum wrench #5477)**
3644	Turnbuckles, camber link, 39mm (69mm center to center) (assembled with rod ends and hollow balls) (1 left, 1 right)
3745	Turnbuckles, toe link, 59mm (78mm center to center) (2) (assembled with rod ends and hollow balls)

Hardware

1926	**Antenna caps, vinyl (2)/ antenna spool**
1726	Antenna, tube (1)/ vinyl antenna cap (1)/ wire retainer (1)
1834	Body clips (12) (standard size)
3934	Body clips, heavy duty (12)
1589	Double-sided adhesive tape (25mm x 25mm) (2)
1633	E-clips/ C-rings
2586	Screws, 3x15mm cap-head machine (hex drive) (6)
2745	Nuts, 3mm nylon locking (12)
3647	Nuts, 4mm flanged nylon locking (steel, serrated) (8)
1747	Nuts, 4mm nylon locking (10)
1747A	**Nuts, aluminum, flanged, serrated (4mm) (red-anodized) (4)**
1985	PTFE-coated washers, 5x8x0.5mm (20) (use with ball bearings)
5525	Rod ends (12)/ hollow balls (12)
5347	Rod ends, Revo® (large) with hollow balls (12)
2742X	Rod ends, short (6)/ hollow balls (6)
3347	Screws, 2.5x5mm button-head machine (hex drive) (6)
3215	Screws, 2.5x6mm cap-head machine (hex drive) (6)
2577	Screws, 3x10mm button-head machine (hex drive) (6)
4859	Screws, 3x10mm flat-head machine (hex drive) (4)
2578	Screws, 3x12mm button-head machine (hex drive) (6)
2552	Screws, 3x12mm countersunk machine (6) (hex drive)
2579	Screws, 3x15mm button-head machine (hex drive) (6)
3646	Screws, 3x15mm flat-head machine (hex drive) (6)
2583	Screws, 3x18mm button-head machine (hex drive) (6)
2580	Screws, 3x20mm button-head machine (hex drive) (6)
2591	Screws, 3x23mm button-head machine (hex drive) (6)
2582	Screws, 3x30mm button-head machine (hex drive) (6)
2592	Screws, 3x40mm button-head machine (hex drive) (6)
2575	Screws, 3x6mm button-head machine (hex drive) (6)
3932	Screws, 3x6mm flat-head machine (hex drive) (6)
2576	Screws, 3x8mm button-head machine (hex drive) (6)
3931	Screws, 3x8mm flat-head machine (hex drive) (6)
3937	Screws, 4x12mm button-head machine (hex drive) (6)
2542	Screws, 4x12mm countersunk machine (hex drive) (6)
2546	Screws, 4x15mm countersunk machine (hex drive) (6)
2743	Set (grub) screws, 3mm hardened (12)
5529	Shim set, 3x7x1mm (2), 3x6x0.5mm (4), 3x7x2mm (2)/ hollow balls, captured (4)
3642X	**Shoulder screws, Ultra Shocks (3x12 hex drive) (6)**
2754	Stub axle pins (4)
2746	**Washers, 3x6mm metal (12)**
3685	White plastic washers (5x8x1.0mm) (6)

Motors & Electronics

1726	Antenna, tube (1)/ vinyl antenna cap (1)/ wire retainer (1)
2260	**BEC assembly (complete)**
3342	Bullet connectors, male, 3.5mm (3)/ heat shrink
3340	**Cooling fan, Velineon® VXL-3s ESC**
3790	Gear adapter, fixed
2072A	Gear set (for 2070, 2075 servos)
2252	**Gear set, metal (for 2250, 2255 servos)**
3354R	Motor cover, endbell (Velineon® 3500)
3351R	Motor, Velineon® 3500, brushless (assembled with 12-gauge wire and gold-plated bullet connectors)
3725R	Mounting plate, electronic speed control (for installation of XL-5/VXL into Bandit or Rustler®)
3352R	Rebuild kit, Velineon® 3500 (includes plastic endbell, 5x11x4mm ball bearings (2), 2.5x5mm BCS (with threadlock) (4), rear bushing)
3347	Screws, 2.5x5mm button-head machine (hex drive) (6)
3931	Screws, 3x8mm flat-head machine (hex drive) (6)
2254	**Servo case, aluminum (blue-anodized) (middle) (for 2250 servo)**
2253	**Servo case, aluminum (red-anodized) (middle) (for 2255 servo)**
2251	**Servo case, plastic (top, middle, bottom)/ gaskets/ hardware (for 2250, 2255 servos)**
2074	Servo case/gaskets (for 2056 and 2075 waterproof servos)
2075R	**Servo, digital high-speed, metal gear (ball bearing), waterproof**
2075	Servo, digital high-torque (ball bearing), waterproof
2250	**Servo, digital high-torque 330 coreless, metal gear (ball bearing), waterproof**
2255	**Servo, digital high-torque 400 brushless, metal gear (ball bearing), waterproof**
2075X	**Servo, digital high-torque, metal gear (ball bearing), waterproof**
3350R	Velineon® VXL-3s Brushless Power System, waterproof (includes VXL-3s waterproof ESC, Velineon 3500 motor, and speed control mounting plate (part #3725R))
3355R	Velineon® VXL-3s Electronic Speed Control, waterproof (brushless) (fwd/rev/brake)
3343	Wire, 12-gauge, silicone (Maxx® Cable) (650mm or 26 inches)

Radio System, Batteries & Chargers

2849X	**4000mAh 11.1v 3-Cell 25C LiPo Battery**
2872X	**5000mAh 11.1v 3-Cell 25C LiPo Battery**
2842X	**5000mAh 7.4v 2-Cell 25C LiPo Battery**
2843X	**5800mAh 7.4v 2-Cell 25C LiPo Battery**
2857X	**6400mAh 11.1v 3-Cell 25C LiPo Battery**
2869X	**7600mAh 7.4v 2-Cell 25C LiPo Battery**
2976	**AC to DC converter, 40W**
2938X	**Adapter, Traxxas® iD® LiPo battery (adapts Traxxas iD batteries to separate balance ports)**
2943	**Battery charge indicators (green (4), blue (4), grey (4))**
6548	Battery door, transmitter (replacement for #6516, 6517, 6528, 6529, 6530 transmitters)
2914	**Battery, Power Cell AA Alkaline (4)**
2922X	**Battery, Power Cell, 3000mAh (NiMH, 6-C flat, 7.2V)**
2923X	**Battery, Power Cell, 3000mAh (NiMH, 7-C flat, 8.4V)**
2926X	**Battery, Power Cell, 3000mAh (NiMH, 7-C hump, 8.4V)**
2942X	**Battery, Series 3 Power Cell, 3300mAh (NiMH, 6-C flat, 7.2V)**
2940X	**Battery, Series 3 Power Cell, 3300mAh (NiMH, 7-C flat, 8.4V)**
2941X	**Battery, Series 3 Power Cell, 3300mAh (NiMH, 7-C hump, 8.4V)**
2952X	**Battery, Series 4 Power Cell, 4200mAh (NiMH, 6-C flat, 7.2V)**
2950X	**Battery, Series 4 Power Cell, 4200mAh (NiMH, 7-C flat, 8.4V)**
2951X	**Battery, Series 4 Power Cell, 4200mAh (NiMH, 7-C hump, 8.4V)**
2960X	**Battery, Series 5 Power Cell, 5000mAh (NiMH, 7-C flat, 8.4V)**
2961X	**Battery, Series 5 Power Cell, 5000mAh (NiMH, 7-C hump, 8.4V)**
2963X	**Battery, Series 5 Power Cell, 5000mAh (NiMH, 8-C hump, 9.6V)**
2984	**Battery/charger completer pack (includes #2969 2-amp NiMH peak detecting AC charger (1), #2926X 3000mAh 8.4V 7-cell NiMH battery (1))**
2992	**Battery/charger completer pack (includes #2970 iD® charger (1), #2843X 5800mAh 7.4V 2-cell 25C LiPo battery (1))**
2994	**Battery/charger completer pack (includes #2970 iD® charger (1), #2849X 4000mAh 11.1v 3-Cell 25C LiPo Battery (1))**
2260	**BEC assembly (complete)**
2975	**Charger, DC, 4 amp (6 - 7 cell, 7.2 - 8.4 volt, NiMH)**
2972	**Charger, EZ-Peak® Dual, 100W, NiMH/LiPo with iD® Auto Battery Identification**
2973	**Charger, EZ-Peak® Live Dual, 200W, NiMH/LiPo with iD® Auto Battery Identification**
2971	**Charger, EZ-Peak® Live, 100W, NiMH/LiPo with iD® Auto Battery Identification**
2970	**Charger, EZ-Peak® Plus, 4 amp, NiMH/LiPo with iD® Auto Battery Identification**
6525	**Communication link, telemetry expander**
6541	**Connector, power tap (with cable) (long)/ wire tie**
6512	Cover plate, Traxxas Link™ Wireless Module
2978	**Fuse, charger, 5A (2) (for #2974, 2975, 2977)**
2072A	Gear set (for 2070, 2075 servos)
2252	**Gear set, metal (for 2250, 2255 servos)**
2968X	**LiPo cell voltage checker/balancer (includes #2938X adapter for Traxxas® iD® batteries)**
2968	**LiPo cell voltage checker/balancer (requires #2938X adapter for Traxxas® iD® batteries)**
6554	**Mount, telemetry expander (fits Bandit, Rustler®, Slash 2WD)**

6535 **Mount, temperature sensor (electric motors)/ wire tie/ thermal pad**
6533 Receiver, micro, TQi 2.4GHz with telemetry & TSM (5-channel)
6552 **Seal kit, expander box (includes o-ring, seals, and silicone grease)**
6526 **Sensor, auto-detectable, temperature**
6527 **Sensor, auto-detectable, voltage**
6520 **Sensor, RPM (long)/ 3x4mm BCS (2)/ 3x4 GS (1)**
6521 **Sensor, temperature and voltage (long)**
2254 **Servo case, aluminum (blue-anodized) (middle) (for 2250 servo)**
2253 **Servo case, aluminum (red-anodized) (middle) (for 2255 servo)**
2251 **Servo case, plastic (top, middle, bottom)/ gaskets/ hardware (for 2250, 2255 servos)**
2074 Servo case/gaskets (for 2056 and 2075 waterproof servos)
2075R **Servo, digital high-speed, metal gear (ball bearing), waterproof**
2075 Servo, digital high-torque (ball bearing), waterproof
2250 **Servo, digital high-torque 330 coreless, metal gear (ball bearing), waterproof**
2255 **Servo, digital high-torque 400 brushless, metal gear (ball bearing), waterproof**
2075X **Servo, digital high-torque, metal gear (ball bearing), waterproof**
6553X **Telemetry expander 2.0 and GPS module 2.0, TQi radio system**
6550X **Telemetry expander 2.0, TQi radio system (for use only with #6551X GPS module)**
6551X **Telemetry GPS module 2.0, TQi radio system (for use only with #6550X telemetry expander)**
6538 **Telemetry trigger magnet holders, spur gear/ magnet, 5x2mm (1)/ 3x8mm CCS (3)/ 3x10mm CCS (3)**
6540 **Telemetry trigger magnet, 5X2mm (1)**
6509R TQi 2.4 GHz High Output radio system, 2-channel, Traxxas Link™ enabled, TSM (2-ch transmitter, 5-ch micro receiver)
6507R **TQi 2.4 GHz High Output radio system, 4-channel with Traxxas Link™ Wireless Module, TSM (4-ch transmitter, 5-ch micro receiver)**
6528 Transmitter, TQi Traxxas Link™ enabled, 2.4GHz high output, 2-channel (transmitter only)
6529 **Transmitter, TQi Traxxas Link™ enabled, 2.4GHz high output, 3-channel (transmitter only)**
6530 **Transmitter, TQi Traxxas Link™ enabled, 2.4GHz high output, 4-channel (transmitter only)**
6511 **Traxxas Link™ Wireless Module**
3355R Velineon® VXL-3s Electronic Speed Control, waterproof (brushless) (fwd/rev/brake)
6537 **Wire retainers, gear cover/ 3x4mm BCS (2)**

Ready-To-Race Model

37076-4 Rustler® VXL: 1/10 Scale Stadium Truck with TQi Traxxas Link™ Enabled 2.4GHz Radio System & Traxxas Stability Management (TSM)®

Rear Suspension

3638 Shock tower (rear)
3752 Stub axle carriers (2) (requires 5x11x4mm bearings)
3652A **Stub axle carriers, Rustler®/Stampede®/Bandit (2), 6061-T6 aluminum (blue-anodized)/ 5x11mm ball bearings (4)**
3652G **Stub axle carriers, Rustler®/Stampede®/Bandit (2), 6061-T6 aluminum (green-anodized)/ 5x11mm ball bearings (4)**
3652P **Stub axle carriers, Rustler®/Stampede®/Bandit (2), 6061-T6 aluminum (pink-anodized)/ 5x11mm ball bearings (4)**
3652X **Stub axle carriers, Rustler®/Stampede®/Bandit (2), 6061-T6 aluminum (red-anodized)/ 5x11mm ball bearings (4)**
2753X Stub axles, rear (2)
3655P **Suspension arms, blue, front/rear (left & right), heavy duty (2)**
3655R **Suspension arms, front/rear (left & right), heavy duty (2)**
3655G **Suspension arms, green, front/rear (left & right), heavy duty (2)**
3655X Suspension arms, left & right
3655T **Suspension arms, orange, front/rear (left & right), heavy duty (2)**
3655L **Suspension arms, red, front/rear (left & right), heavy duty (2)**
3655A **Suspension arms, white, front/rear (left & right), heavy duty (2)**
3640 Suspension screw pin set, steel (hex drive) (requires part #2640 for a complete suspension pin set) (Bandit, Rustler®, Stampede®)
3741A **Turnbuckles, aluminum (blue-anodized), camber links, front, 39mm (2), rear, 49mm (2) (assembled w/rod ends & hollow balls)/ wrench**
3741X **Turnbuckles, aluminum (red-anodized), camber links, front, 39mm (2), rear, 49mm (2) (assembled w/ rod ends & hollow balls)/wrench**
3643 Turnbuckles, camber link, 49mm (82mm center to center) (assembled with rod ends and hollow balls) (1 left, 1 right)

Shocks (Pro-level Aluminum)

2664 **Big Bore shock cylinder (long) (1)**
2666 **Big Bore shock cylinder (XX-long) (1)**
5862 **Big Bore shocks (hard-anodized & PTFE-coated T6 aluminum) (assembled with TiN shafts and springs) (front & rear) (4)**
2660 **Big Bore shocks (long) (hard-anodized & PTFE-coated T6 aluminum) (assembled with TiN shafts) w/o springs (front) (2)**
2662 **Big Bore shocks (XX-long) (hard-anodized & PTFE-coated T6 aluminum) (assembled with TiN shafts) w/o springs (rear) (2)**
2669 **Piston head set (2-hole (2)/ 3-hole (2))/ shock mounting bushings & washers (2) (Big Bore Shocks)**
2362 **Rebuild kit, Ultra shocks (for 2 shocks)**
1942 Rod ends (16 long & 4 short)/ hollow ball connectors (18)/ ball screws (2)
2742X Rod ends, short (6)/ hollow balls (6)
2667 **Shock caps, aluminum (2)/ (Big Bore Shocks)**
1664T **Shock shafts, hardened steel, titanium nitride coated (long) (2)**
2656T **Shock shafts, hardened steel, titanium nitride coated (xx-long) (2)**
1664 Shock shafts, steel, chrome finish (long) (2)
2656 Shock shafts, steel, chrome finish (xx-long) (2)
1765 Silicone diaphragms (4)
1666 Silicone shock oil (30 wt)
2668 **Spring retainers, upper & lower (2)/ spring pre-load spacers: 1mm (4)/ 1.5mm (2)/ 2mm (2)/ 4mm (2)/ 8mm (2) (Big Bore Shocks)**
5860 **Springs, front (white) (progressive rate) (2) (fits #5862 aluminum Big Bore shocks)**
5859 **Springs, rear (white) (progressive rate) (2) (fits #5862 aluminum Big Bore shocks)**

Shocks (Ultra Shocks)

3642 **Attachment screws, shock (3x12mm shoulder screws) (6)**
3765A Body, Ultra Shock(s) (long) (grey) (2)
3766A Body, Ultra Shock(s) (XXL) (grey) (2)
2362 **Rebuild kit, Ultra shocks (for 2 shocks)**
1942 Rod ends (16 long & 4 short)/ hollow ball connectors (18)/ ball screws (2)
2742X Rod ends, short (6)/ hollow balls (6)
3767 **Shock caps (2)/ shock bottoms (2)**
8361 Shock caps (black) (4) (assembled with hollow balls)
3767A **Shock caps, aluminum (blue-anodized) (4) (fits all Ultra Shocks)**
3767G **Shock caps, aluminum (green-anodized) (4) (fits all Ultra Shocks)**
3767P **Shock caps, aluminum (pink-anodized) (4) (fits all Ultra Shocks)**
3767X **Shock caps, aluminum (red-anodized) (4) (fits all Ultra Shocks)**
1664T **Shock shafts, hardened steel, titanium nitride coated (long) (2)**
2656T **Shock shafts, hardened steel, titanium nitride coated (xx-long) (2)**
1664 **Shock shafts, steel, chrome finish (long) (2)**
2656 Shock shafts, steel, chrome finish (xx-long) (2)
1765 Silicone diaphragms (4)
1666 Silicone shock oil (30 wt)
3769 Spring pre-load spacers: 1mm (4)/ 2mm (2)/ 4mm (2)/ 8mm (2)
3768 Spring retainers, upper & lower (2)/ piston head set (2-hole (2)/ 3-hole (2))
2458 **Springs, front (black) (2)**
3758 **Springs, front (black) (2)**
3758T **Springs, front (blue) (2)**
3758A **Springs, front (green) (2)**
2458P **Springs, front (pink) (2)**
3758R **Springs, front (red) (2)**
2458A Springs, front (white) (2)
3758X **Springs, front (white) (2)**
3757 **Springs, rear (black) (2)**
3757T **Springs, rear (blue) (2)**
3757A **Springs, rear (green) (2)**
3757P **Springs, rear (pink) (2)**
3757R **Springs, rear (red) (2.9 rate) (2)**
3757X Springs, rear (white) (2)
4957 **Springs, red (for Ultra Shocks only) (2.5 rate) (f/r) (2)**
3760 **Ultra Shocks (black) (long) (complete w/ spring pre-load spacers & springs) (front) (2)**
3762 **Ultra Shocks (black) (xx-long) (complete w/ spring pre-load spacers & springs) (rear) (2)**
3760A Ultra Shocks (grey) (long) (complete w/ spring pre-load spacers & springs) (2)
3762A Ultra Shocks (grey) (xx-long) (complete w/ spring pre-load spacers & springs) (rear) (2)

Slipper Clutch Components

3793 Input shaft (slipper shaft) / spring pin
5552X Rebuild kit, slipper clutch (steel disc/ friction pads (3)/ spring (2)/ pin/ 4.0mm NL (1)/ 5.0mm NL (1))
2554 Screws, 3x6mm cap-head machine (hex drive) (6)
5556 Slipper pressure plate & hub (aluminum alloy)

RUSTLER VXL® (37076-4)

Spur Gears & Pinion Gears

3790 Gear adapter, fixed
2416 Gear, 16-T pinion (48-pitch) / set screw
1918 Gear, 18-T pinion (48-pitch) / set screw
2419 Gear, 19-T pinion (48-pitch) / set screw
2423 Gear, 23-T pinion (48-pitch) / set screw
2426 Gear, 26-T pinion (48-pitch)/set screw
2431 Gear, 31-T pinion (48-pitch) / set screw
4725 Gear, pinion (25-tooth) (48-pitch) / set screw
4728 Gear, pinion (28-tooth) (48-pitch)/ set screw
4676 Spur gear, 76-tooth (48-pitch) (for models with Torque-Control slipper clutch)
4683 Spur gear, 83-tooth (48-pitch) (for models with Torque-Control slipper clutch)
4686 Spur gear, 86-tooth (48-pitch) (for models with Torque-Control slipper clutch)
4690 Spur gear, 90-tooth (48-pitch) (for models with Torque-Control slipper clutch)

Steering Components

2728 Ball bearings (5x8x2.5mm) (2)
2545 Bellcrank bushings (plastic) (5x8x2.5mm) (4)
5347 Rod ends, Revo® (large) with hollow balls (12)
3744 Servo saver w/adapters
3743 Steering bellcranks (l&r)/ draglink
3743A Steering bellcranks, drag link (blue-anodized 6061-T6 aluminum)/ 5x8mm ball bearings (4)/ hardware (assembled)
3743G Steering bellcranks, drag link (green-anodized 6061-T6 aluminum)/ 5x8mm ball bearings (4)/ hardware (assembled)
3743P Steering bellcranks, drag link (pink-anodized 6061-T6 aluminum)/ 5x8mm ball bearings (4)/ hardware (assembled)
3743X Steering bellcranks, drag link (red-anodized 6061-T6 aluminum)/ 5x8mm ball bearings (4)/ hardware (assembled)
6845X Steering bellcranks/ servo saver/ servo saver spring/ servo spring retainer/servo horn, steering
2537 Threaded rods (20/25/44mm 1 ea.)/ (1) 12mm set screw
3139A Turnbuckles, aluminum (blue-anodized), toe links, 59mm (2) (assembled w/ rod ends & hollow balls) (requires 5mm aluminum wrench #5477)
3139X Turnbuckles, aluminum (red-anodized), toe links, 59mm (2) (assembled with rod ends & hollow balls) (requires 5mm aluminum wrench #5477)
3745 Turnbuckles, toe link, 59mm (78mm center to center) (2) (assembled with rod ends and hollow balls)

Suspension Linkage

5525 Rod ends (12)/ hollow balls (12)
5525R Rod ends, heavy duty (Jato®/Slayer) (8)
5347 Rod ends, Revo® (large) with hollow balls (12)
3739 Screw pin set (Rustler®/ Bandit/ Stampede®)
3744 Servo saver w/adapters
2640 Suspension pins, 44mm (2) w/ e-clips
3640 Suspension screw pin set, steel (hex drive) (requires part #2640 for a complete suspension pin set) (Bandit, Rustler®, Stampede®)
2537 Threaded rods (20/25/44mm 1 ea.)/ (1) 12mm set screw
3737A Turnbuckle, aluminum (blue-anodized), camber link, front, 39mm (1)(assembled w/rod ends)/ hollow balls (2) (See part 3741A for complete camber link set)
3738A Turnbuckle, aluminum (blue-anodized), camber link, rear, 49mm (1) (assembled w/ rod ends & hollow balls) (See part 3741A for complete camber link set)
3737 Turnbuckle, aluminum (red-anodized), camber link, front, 39mm (1) (assembled w/rod ends)/ hollow balls (2)(See part 3741X for complete camber link set)
3738 Turnbuckle, aluminum (red-anodized), camber link, rear, 49mm (1) (assembled with rod ends & hollow balls) (See part 3741X for complete camber link set)
3741A Turnbuckles, aluminum (blue-anodized), camber links, front, 39mm (2), rear, 49mm (2) (assembled w/rod ends & hollow balls)/ wrench
3139A Turnbuckles, aluminum (blue-anodized), toe links, 59mm (2) (assembled w/ rod ends & hollow balls) (requires 5mm aluminum wrench #5477)
3741X Turnbuckles, aluminum (red-anodized), camber links, front, 39mm (2), rear, 49mm (2) (assembled w/ rod ends & hollow balls)/wrench
3139X Turnbuckles, aluminum (red-anodized), toe links, 59mm (2) (assembled with rod ends & hollow balls) (requires 5mm aluminum wrench #5477)
3644 Turnbuckles, camber link, 39mm (69mm center to center) (assembled with rod ends and hollow balls) (1 left, 1 right)
3643 Turnbuckles, camber link, 49mm (82mm center to center) (assembled with rod ends and hollow balls) (1 left, 1 right)
3745 Turnbuckles, toe link, 59mm (78mm center to center) (2) (assembled with rod ends and hollow balls)

Team Traxxas Items

2514 Decal sheet, racing sponsors
6160X DVD, Maxx® Power! Full Throttle Action (sleeve)
9950 Official Team Traxxas® racing decal set (flag logo/ 6-color)
9909 Traxxas® racing banner, red & black (3x7 feet)

Tires & Wheels

5116 Ball bearings, blue rubber sealed (5x11x4mm) (2)
5114 Ball bearings, blue rubber sealed (5x8x2.5mm) (2)
5854 Hub retainer, 17mm hubs, M4 X 0.7 (4) (use with #5853X, #6856X, #6469)
3647 Nuts, 4mm flanged nylon locking (steel, serrated) (8)
1985 PTFE-coated washers, 5x8x0.5mm (20) (use with ball bearings)
1647 Silicone grease
2754 Stub axle pins (4)
3770A Tires & wheels, assembled, glued (2.8") (All-Star black chrome wheels, Alias® tires, foam inserts) (rear) (2) (TSM rated)
3776 Tires & wheels, assembled, glued (2.8") (All-Star black chrome wheels, paddle tires, foam inserts) (2WD electric rear) (2) (TSM rated)
3771A Tires & wheels, assembled, glued (2.8") (All-Star black chrome wheels, ribbed tires, foam inserts) (electric front) (2)
3770 Tires & wheels, assembled, glued (2.8") (All-Star chrome wheels, Alias® tires, foam inserts) (2WD electric rear) (2)
3771 Tires & wheels, assembled, glued (2.8") (All-Star chrome wheels, ribbed tires, foam inserts) (electric front) (2)
6773G Tires & wheels, assembled, glued (2.8") (RXT 4X4 green wheels, Talon Extreme tires, foam inserts) (4WD electric front/rear, 2WD electric front only) (2) (TSM rated)
6774X Tires & wheels, assembled, glued (2.8") (RXT black chrome wheels, Talon Extreme tires, foam inserts) (2WD electric rear) (2) (TSM rated)
6773X Tires & wheels, assembled, glued (2.8") (RXT black chrome wheels, Talon Extreme tires, foam inserts) (4WD electric front/rear, 2WD electric front only) (2) (TSM rated)
6774 Tires & wheels, assembled, glued (2.8") (RXT black wheels, Talon Extreme tires, foam inserts) (2WD electric rear) (2) (TSM rated)
6773 Tires & wheels, assembled, glued (2.8") (RXT black wheels, Talon Extreme tires, foam inserts) (4WD electric front/rear, 2WD electric front only) (2) (TSM rated)
6774G Tires & wheels, assembled, glued (2.8") (RXT green wheels, Talon Extreme tires, foam inserts) (2WD electric rear) (2) (TSM rated)
6774A Tires & wheels, assembled, glued (2.8") (RXT orange wheels, Talon Extreme tires, foam inserts) (2WD electric rear) (2) (TSM rated)
6773A Tires & wheels, assembled, glued (2.8") (RXT orange wheels, Talon Extreme tires, foam inserts) (4WD electric front/rear, 2WD electric front only) (2) (TSM rated)
6774R Tires & wheels, assembled, glued (2.8") (RXT satin chrome wheels, Talon Extreme tires, foam inserts) (2WD electric rear) (2) (TSM rated)
6773R Tires & wheels, assembled, glued (2.8") (RXT satin chrome wheels, Talon Extreme tires, foam inserts) (4WD electric front/rear, 2WD electric front only) (2) (TSM rated)
3773A Tires & wheels, assembled, glued (All Star black chrome wheels, Anaconda® tires, foam inserts) (2WD electric rear) (1 left, 1 right)
3773 Tires & wheels, assembled, glued (All Star chrome wheels, Anaconda® tires, foam inserts) (2WD electric rear) (1 left, 1 right)
3776A Tires & wheels, assembled, glued (All-Star black chrome wheels, Anaconda® tires, foam inserts) (nitro rear/ electric front) (1 left, 1 right)
5576R Tires & wheels, assembled, glued (All-Star chrome wheels, Anaconda® tires, foam inserts) (nitro rear/ electric front) (1 left, 1 right)
5569 Tires, Alias 2.8" (rear) (2)/ foam inserts (2)
5578 Tires, Anaconda® 2.8" (2)/ foam inserts (2)
4791 Tires, Pro-Trax mini-spiked 2.2" (rear) (2)
4790R Tires, Pro-Trax spiked 2.2" (soft-compound)(rear) (2)/ foam inserts (2)
5563 Tires, Ribbed 2.8" (front) (2)/ foam inserts (2)
1654 Wheel hubs, hex (rear) (2)/ stub axle pins (2)
3654 Wheel hubs, hex (front) (tall offset) (2)/ axle pins (2.5x12mm) (2)
5853X Wheel hubs, splined, 17mm, short (2), long (2)/wheel nuts, splined, 17mm (4) (blue-anodized)/ hub retainer M4x0.7 (4)/axle pin (4)/wrench, 5mm
5353 Wheel nuts, splined, 17mm (blue-anodized) (4)
5480X Wheel wrench, splined, 17mm
3772A Wheels, All-Star 2.8" (black chrome) (2WD electric rear)
5576A Wheels, All-Star 2.8" (black chrome) (nitro rear/ electric front) (2)

3772	**Wheels, All-Star 2.8" (chrome) (2WD electric rear)**
5576	**Wheels, All-Star 2.8" (chrome) (nitro rear/ electric front) (2)**
3673	**Wheels, chrome (2.2") (front) (2)**
3672	**Wheels, chrome (2.2") (rear) (2)**
3675	**Wheels, dyeable nylon 2.2 (front) (2)**
3674	**Wheels, dyeable nylon 2.2 (rear) (2)**
3774	**Wheels, Twin-Spoke 2.8" (chrome) (2WD electric rear) (2)**
5572	**Wheels, Twin-Spoke 2.8" (chrome) (nitro rear/ electric front) (2)**

Transmission Components

1552	**Motor screws (3x8mm hex cap) (6)/washers (6)/ wrench**
4607	Ball bearings (5x11x4mm) (8)
3792	Cover, gear/ rubber gear cover plug/ 3x6 RM (2)
5478	Flat wrench, 8mm (blue-anodized aluminum)
3790	Gear adapter, fixed
3691	**Gearbox halves (l&r) (black) w/ idler gear shaft**
3691A	Gearbox halves (l&r) (grey) w/ idler gear shaft
5148	Grease, white lithium
3696	Idler gear, steel (30-tooth)
3793	Input shaft (slipper shaft) / spring pin
2381X	Main diff with steel ring gear/ side cover plate/ screws (Bandit, Stampede®, Rustler®)
2382	Planet gears (4)/ planet shafts (4)/ sun gears (2)/sun gear alignment shaft (1) all hardened steel
2388X	Planetary gear differential with steel ring gear (complete) (fits Bandit, Stampede®, Rustler®)
5552X	Rebuild kit, slipper clutch (steel disc/ friction pads (3)/ spring (2)/ pin/ 4.0mm NL (1)/ 5.0mm NL (1))
2554	Screws, 3x6mm cap-head machine (hex drive) (6)
3931	Screws, 3x8mm flat-head machine (hex drive) (6)
3185X	Screws, 3x8mm washerhead machine (large head for motor mount) (6)
1647	Silicone grease
5556	Slipper pressure plate & hub (aluminum alloy)
3195	Top drive gear, steel (22-tooth)

Traxxas Tools

3433X	**Body reamer (aluminum handle)**
3433	**Body reamer (plastic handle)**
3436	**Cap, body reamer**
3432	**Scissors, curved tip**
3431	**Scissors, straight tip**
8712	**Speed Bit Essentials Set, hex and nut driver, 7-piece, includes premium handle (medium), travel pouch, hex drivers (straight: 1.5mm, 2.0mm, 2.5mm) and nut drivers (5.0mm, 5.5mm, 7.0mm, and 8.0mm), 1/4" drive**
8721	**Speed bit handle, medium (one piece)**
8720	**Speed bit handle, premium, large (rubber overmold)**
8722	**Speed bit handle, premium, medium (rubber overmold)**
8710	**Speed Bit Master Set, hex and nut driver, 13-piece, includes premium handle (medium), travel pouch, hex drivers (straight: 1.5mm, 2.0mm, 2.5mm, 3.0mm), (ball-end: 2.0mm, 2.5mm, 3.0mm), and nut drivers (4.00mm, 4.50mm, 5.00mm, 5.50mm, 7.00mm, 8.00mm),**
8711	**Speed Bit Master Set, hex driver, 7-piece straight and ball end, includes premium handle (medium), travel pouch, hex drivers (straight: 1.5mm, 2.0mm, 2.5mm, 3.0mm) (ball end: 2.0mm, 2.5mm, 3.0mm), 1/4" drive**
8719	**Speed Bit Master Set, nut driver, 6-piece, includes premium handle (medium), travel pouch, and nut drivers (4.0mm, 4.5mm, 5.0mm, 5.5mm, 7.0mm, 8.0mm), 1/4" drive**
8716	**Speed Bit Set, hex driver, 2-piece ball-end (2.0mm, 2.5mm), 1/4" drive**
8716X	**Speed Bit Set, hex driver, 3-piece ball-end (2.0mm, 2.5mm, 3.0mm), 1/4" drive**
8715	**Speed Bit Set, hex driver, 3-piece straight (1.5mm, 2.0mm, 2.5mm), 1/4" drive**
8715X	**Speed Bit Set, hex driver, 4-piece straight (1.5mm, 2.0mm, 2.5mm, 3.0mm), 1/4" drive**
3415	**Tool set with pouch (includes 1.5mm, 2.0mm, 2.5mm, 3.0mm, 3.5mm, 4mm drivers/ 4mm, 5mm, 5.5mm, 7mm and 8mm nut drivers/ 2mm, 4mm, and 5mm slotted screwdrivers/ #00 Phillips, #0 Phillips, and #1 Phillips screwdrivers/ 4mm and 8mm wrench/ driver handle**

Turnbuckles & Threaded Rods

5525	Rod ends (12)/ hollow balls (12)
5525R	**Rod ends, heavy duty (Jato®/Slayer) (8)**
5347	Rod ends, Revo® (large) with hollow balls (12)
2537	Threaded rods (20/25/44mm 1 ea.)/ (1) 12mm set screw
3737A	**Turnbuckle, aluminum (blue-anodized), camber link, front, 39mm (1)(assembled w/rod ends)/ hollow balls (2) (See part 3741A for complete camber link set)**
3738A	**Turnbuckle, aluminum (blue-anodized), camber link, rear, 49mm (1) (assembled w/ rod ends & hollow balls) (See part 3741A for complete camber link set)**
3737	**Turnbuckle, aluminum (red-anodized), camber link, front, 39mm (1) (assembled w/rod ends)/ hollow balls (2)(See part 3741X for complete camber link set)**
3738	**Turnbuckle, aluminum (red-anodized), camber link, rear, 49mm (1) (assembled with rod ends & hollow balls) (See part 3741X for complete camber link set)**
3741A	**Turnbuckles, aluminum (blue-anodized), camber links, front, 39mm (2), rear, 49mm (2) (assembled w/rod ends & hollow balls)/ wrench**
3139A	**Turnbuckles, aluminum (blue-anodized), toe links, 59mm (2) (assembled w/ rod ends & hollow balls) (requires 5mm aluminum wrench #5477)**
3741X	**Turnbuckles, aluminum (red-anodized), camber links, front, 39mm (2), rear, 49mm (2) (assembled w/ rod ends & hollow balls)/wrench**
3139X	**Turnbuckles, aluminum (red-anodized), toe links, 59mm (2) (assembled with rod ends & hollow balls) (requires 5mm aluminum wrench #5477)**
3644	Turnbuckles, camber link, 39mm (69mm center to center) (assembled with rod ends and hollow balls) (1 left, 1 right)
3643	Turnbuckles, camber link, 49mm (82mm center to center) (assembled with rod ends and hollow balls) (1 left, 1 right)
3745	Turnbuckles, toe link, 59mm (78mm center to center) (2) (assembled with rod ends and hollow balls)

If you have questions or need technical assistance, call Traxxas at:

1-888-TRAXXAS

(1-888-872-9927) (U.S. residents only)

For orders, calls outside the U.S., and other information, call 972-549-3000, or fax to 972-549-3011 e-mail Traxxas at support@Traxxas.com

TRAXXAS.COM

REV. 201002 1239

BIGFOOT®

BIGFOOT®

MODEL 36084-1/36034-1

ELECTRIC POWERED
2WD MONSTER TRUCK



HIGH-CAPACITY 3000 MAH 7-CELL BATTERY AND 4-AMP DC FAST CHARGER

WATERPROOF XL-5 ESC AND TITAN 12T MOTOR

TQ 2.4GHz TRANSMITTER

MONSTER ROCK-CRUSHING TORQUE

BIGFOOT® is "The Original Monster Truck". This is the truck that started the monster truck phenomenon and brought car-crushing fun and excitement to fairgrounds and arenas everywhere. Traxxas faithfully captures the spirit and classic look of BIGFOOT No. 1 in amazing detail with this fully licensed replica. Relive the thrill of your first monster truck event with this classic powerhouse. Hammer the throttle for non-stop wheelies and crush the competition underneath its towering stance. Built Traxxas Tough™ for all-day fun, BIGFOOT comes out of the box fully assembled, waterproof, and Ready-To-Race®.

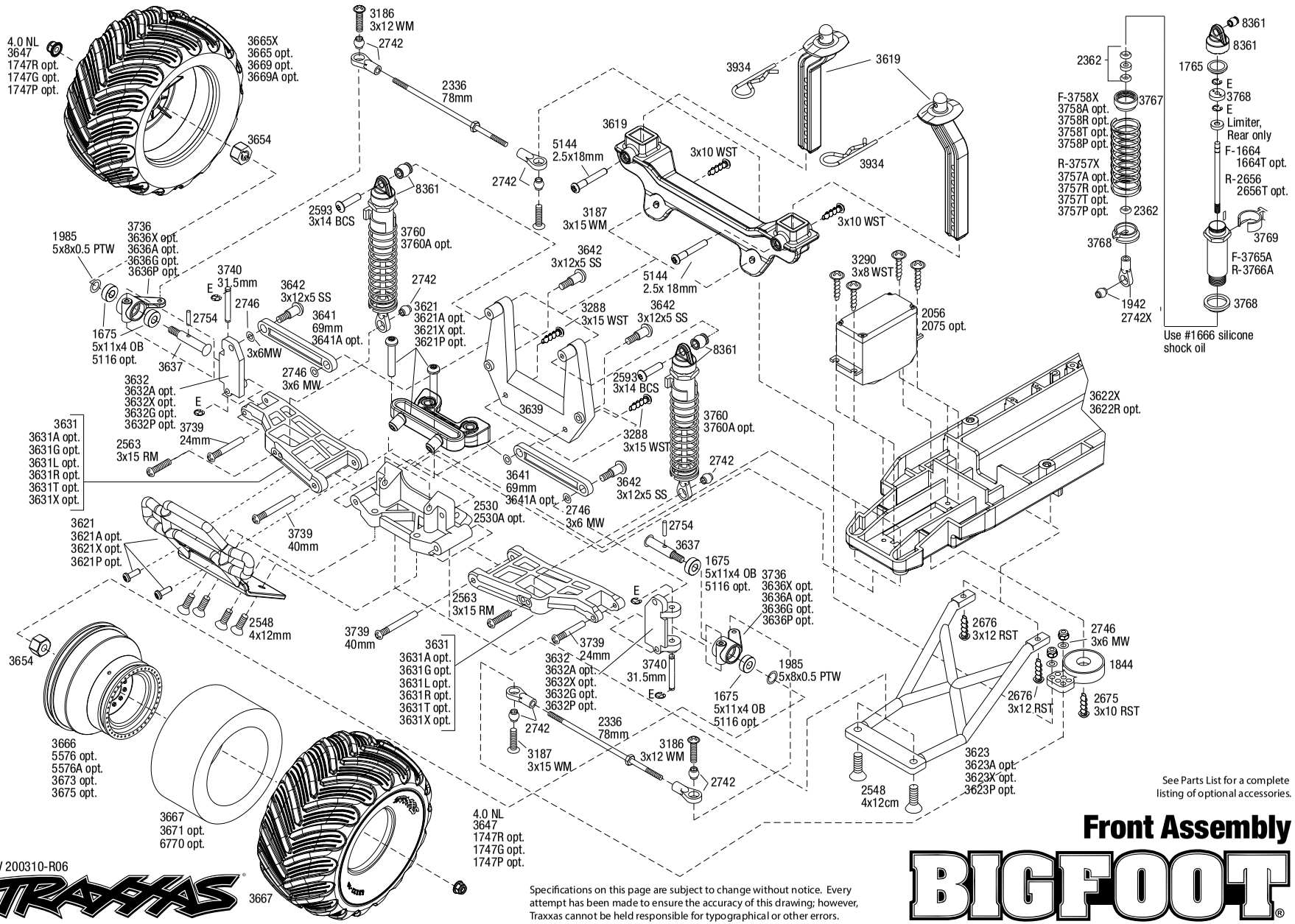

See Parts List for a complete listing of optional accessories.

Front Assembly

BIGFOOT®

REV 200310-R06

TRAXXAS

Specifications on this page are subject to change without notice. Every attempt has been made to ensure the accuracy of this drawing; however, Traxxas cannot be held responsible for typographical or other errors.

BIGFOOT® (36084-1/36034-1)

BIGFOOT® Chassis Assembly

Questions? **Call toll-free, 1-888-TRAXXAS**

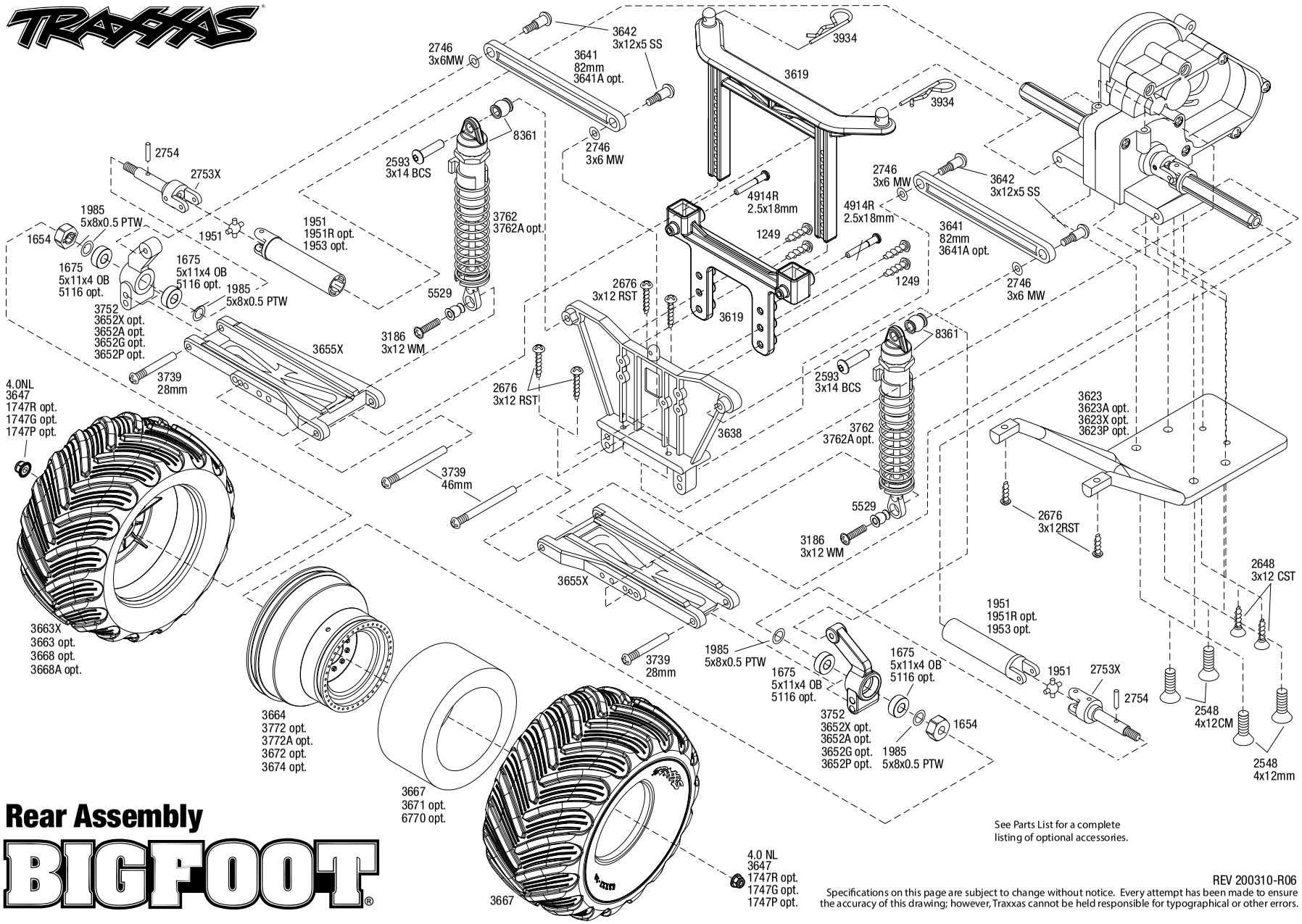

Rear Assembly

BIGFOOT®

See Parts List for a complete listing of optional accessories.

REV 200310-R06

Specifications on this page are subject to change without notice. Every attempt has been made to ensure the accuracy of this drawing; however, Traxxas cannot be held responsible for typographical or other errors.

BIGFOOT® (36084-1/36034-1)

EXPLODED VIEWS

BIGFOOT®
Transmission Assembly

REV 200310-R06

Specifications on this page are subject to change without notice. Every attempt has been made to ensure the accuracy of this drawing; however, Traxxas cannot be held responsible for typographical or other errors.

See Parts List for a complete listing of optional accessories.

Questions? **Call toll-free, 1-888-TRAXXAS**

PARTS SHOWN IN BOLD ARE OPTIONAL ACCESSORIES.

Part categories and individual part listings are arranged alphabetically.

Bearings & Bushings

4607 **Ball bearings (5x11x4mm) (8)**
5116 Ball bearings, blue rubber sealed (5x11x4mm) (2)
1675 Bushings, self-lubricating (5x11x4mm) (14)
1985 PTFE-coated washers, 5x8x0.5mm (20) (use with ball bearings)

Body & Accessories

1926 **Antenna caps, vinyl (2)/ antenna spool**
1726 Antenna, tube (1)/ vinyl antenna cap (1)/ wire retainer (1)
3662 Body accessories kit, Bigfoot® No. 1 (includes winch, front and rear bumpers, roll bar, light bar, engine detail, & mounting hardware) (grille sold separately)
1834 Body clips (12) (standard size)
3934 Body clips, heavy duty (12)
1914R **Body mount, front & rear (black)/ body posts, 52mm (2), 38mm (2), 25mm (2), 6.5mm (2)/ body post extensions (4)/ hardware**
3614 **Body mounts (front & rear)**
3619 Body mounts, front & rear/ body mount posts, front & rear (adjustable)/ 2.5x18mm screw pins (4)
1815 **Body washers (8)**
6716 **Body washers, foam, 2mm (2)/ 3mm (2)/ 4mm (4)**
3658 **Body, Bigfoot® Firestone, Officially Licensed replica (painted, decals applied)**
3653 Body, Bigfoot® Flame, Officially Licensed replica (painted, decals applied)
3661X Body, Bigfoot® No. 1, blue-x, Officially Licensed replica (painted, decals applied)
3660 **Body, Bigfoot® No. 1, Officially Licensed replica (clear, requires painting)/ window masks/ decal sheet**
3661 Body, Bigfoot® No. 1, Officially Licensed replica (painted, decals applied)
3657 **Body, Bigfoot®, Officially Licensed replica (clear, requires painting)/ window masks/ decal sheet**
3621 Bumper, front / bumper mount, front / 4x23mm RM (2)/ 3x10mm RST (2) (black)
3621X **Bumper, front / bumper mount, front / 4x23mm RM (2)/ 3x10mm RST (2) (blue)**
3621A **Bumper, front / bumper mount, front / 4x23mm RM (2)/ 3x10mm RST (2) (green)**
3621P **Bumper, front / bumper mount, front / 4x23mm RM (2)/ 3x10mm RST (2) (pink)**
2514 **Decal sheet, racing sponsors**
3656 Grille, Bigfoot® No. 1 (chrome)/ decals/ adhesive tape/ mounting hardware
9950 **Official Team Traxxas® racing decal set (flag logo/ 6-color)**
3931 Screws, 3x8mm flat-head machine (hex drive) (6)
5185 **Tires, rubber (2) (fits Traxxas® wheelie bar wheels)**
4974 **Wheelie bar arm (1)/ connector (1)/ 3x12 SS (hex drive) (4)**
3677A **Wheelie bar mount (1) / hardware (green)**
3677P **Wheelie bar mount (1) / hardware (pink)**
3677 Wheelie bar mount (1)/ hardware (black)
3677X **Wheelie bar mount (1)/ hardware (blue)**
3678 **Wheelie bar, assembled (black) (fits Slash, Bandit, Rustler®, Stampede® series)**
3678X **Wheelie bar, assembled (blue) (fits Slash, Bandit, Rustler®, Stampede® series)**
3678A **Wheelie bar, assembled (green) (fits Slash, Bandit, Rustler®, Stampede® series)**
3678P **Wheelie bar, assembled (pink) (fits Slash, Bandit, Rustler®, Stampede® series)**
4976 **Wheels (4)/ axles (2) (for T-Maxx®/E-Maxx wheelie bar)**
5186A **Wheels, aluminum (blue-anodized) (2)/ 5x8mm ball bearings (4)/ axles (2)/ rubber tires (2)**
5186 **Wheels, aluminum (red-anodized) (2)/ 5x8mm ball bearings (4)/ axles (2)/ rubber tires (2)**

Chassis & Attachments

3725X **Battery expansion kit (allows for installation of taller multi-cell battery packs) (Rustler, Bandit, Stampede) (requires part #3627X)**
3627X Battery hold-down (grey) (1) / receiver hold-down (grey) (1) / metal posts (2)/ spacers (2)/ body clips (2)/ servo tape/ adhesive foam pad
3628 Box, receiver (sealed)/ foam pad/2.5x8mm CS (4)/ 3x10mm CS (2)
2735 **Bumper (front)**
2735P **Bumper (front) (pink)**
3621 Bumper, front / bumper mount, front / 4x23mm RM (2)/ 3x10mm RST (2) (black)
3621X **Bumper, front / bumper mount, front / 4x23mm RM (2)/ 3x10mm RST (2) (blue)**
3621A **Bumper, front / bumper mount, front / 4x23mm RM (2)/ 3x10mm RST (2) (green)**
3621P **Bumper, front / bumper mount, front / 4x23mm RM (2)/ 3x10mm RST (2) (pink)**
3622X Main chassis (black) (164mm long battery compartment) (fits both flat and hump style battery packs) (use only with #3626R ESC mounting plate)
3622R **Main chassis (grey) (164mm long battery compartment) (fits both flat and hump style battery packs) (use only with #3626R ESC mounting plate)**
3626R Mounting plate, electronic speed control/receiver box (for installation of XL-5/VXL and waterproof receiver box into Stampede®)
3629 Seal kit, receiver box (includes o-ring, seals, and silicone grease)
3623 Skid plates, front & rear (black)
3623X **Skid plates, front & rear (blue)**
3623A **Skid plates, front & rear (green)**
3623P **Skid plates, front & rear (pink)**
5185 **Tires, rubber (2) (fits Traxxas® wheelie bar wheels)**
4974 **Wheelie bar arm (1)/ connector (1)/ 3x12 SS (hex drive) (4)**
3677A **Wheelie bar mount (1) / hardware (green)**
3677P **Wheelie bar mount (1) / hardware (pink)**
3677 Wheelie bar mount (1)/ hardware (black)
3677X **Wheelie bar mount (1)/ hardware (blue)**
3678 **Wheelie bar, assembled (black) (fits Slash, Bandit, Rustler®, Stampede® series)**
3678X **Wheelie bar, assembled (blue) (fits Slash, Bandit, Rustler®, Stampede® series)**
3678A **Wheelie bar, assembled (green) (fits Slash, Bandit, Rustler®, Stampede® series)**
3678P **Wheelie bar, assembled (pink) (fits Slash, Bandit, Rustler®, Stampede® series)**
4976 **Wheels (4)/ axles (2) (for T-Maxx®/E-Maxx wheelie bar)**
5186A **Wheels, aluminum (blue-anodized) (2)/ 5x8mm ball bearings (4)/ axles (2)/ rubber tires (2)**
5186 **Wheels, aluminum (red-anodized) (2)/ 5x8mm ball bearings (4)/ axles (2)/ rubber tires (2)**

Differential Components

2381X Main diff with steel ring gear/ side cover plate/ screws (Bandit, Stampede®, Rustler®)
2382 Planet gears (4)/ planet shafts (4)/ sun gears (2)/sun gear alignment shaft (1) all hardened steel
2388X Planetary gear differential with steel ring gear (complete) (fits Bandit, Stampede®, Rustler®)
5169 Screws, 2.6x8mm countersunk machine (6)
1647 Silicone grease

Driveline Components

5116 **Ball bearings, blue rubber sealed (5x11x4mm) (2)**
4628R Differential output yokes, black (2)/ 3x5mm countersunk screws (2)/ screw pin (2)
4628X **Differential output yokes, hardened steel (w/ U-joints) (2)**
6828X **Differential output yokes, heavy duty (2)/ screw pin (2)**
1951R **Driveshafts, rear, steel-spline constant-velocity (complete assembly) (2) (fits 2WD Rustler/Stampede)**
1953 **Half shaft pro-pack (internal-splined (6)/ external-splined (6) (plastic shafts only)**
6752 **Half shaft, external splined (steel-spline constant-velocity) (1) (fits 2WD Rustler/Stampede)**
6751 **Half shaft, internal splined (steel-spline constant-velocity) (1)**
6850X **Half shafts, heavy duty (external splined (2)/ internal splined (2))/ metal u-joints (4)**
1951 Half shafts, long truck (external-splined (2) & internal-splined (2)/ metal U-joints (4)
6757 **Rebuild kit, steel-splined constant-velocity driveshafts (includes pins, dustboots, lube, and hardware)**
3752 Stub axle carriers (2) (requires 5x11x4mm bushings or bearings)
3652A **Stub axle carriers, Rustler®/Stampede®/Bandit (2), 6061-T6 aluminum (blue-anodized)/ 5x11mm ball bearings (4)**
3652G **Stub axle carriers, Rustler®/Stampede®/Bandit (2), 6061-T6 aluminum (green-anodized)/ 5x11mm ball bearings (4)**
3652P **Stub axle carriers, Rustler®/Stampede®/Bandit (2), 6061-T6 aluminum (pink-anodized)/ 5x11mm ball bearings (4)**
3652X **Stub axle carriers, Rustler®/Stampede®/Bandit (2), 6061-T6 aluminum (red-anodized)/ 5x11mm ball bearings (4)**
2754 Stub axle pins (4)

BIGFOOT® (36084-1/36034-1)

6753	**Stub axle, rear, 5mm (steel-splined constant-velocity driveshaft) (1)**
2753X	Stub axles, rear (2)
6853X	**Stub axles, rear, heavy duty (2)/pins (2)**

Front Suspension & Steering

3637	Axles (front) (2)
2728	**Ball bearings (5x8x2.5mm) (2)**
5116	**Ball bearings, blue rubber sealed (5x11x4mm) (2)**
2545	Bellcrank bushings (plastic) (5x8x2.5mm) (4)
2530	Bulkhead (front) (black)
2530A	**Bulkhead (front) (grey)**
1675	Bushings, self-lubricating (5x11x4mm) (14)
3632	Caster blocks (l&r) (30-degree)
3632A	**Caster blocks, 30-degree, blue-anodized 6061-T6 aluminum (left & right)/ suspension screw pin (2)**
3632G	**Caster blocks, 30-degree, green-anodized 6061-T6 aluminum (left & right)/ suspension screw pin (2)**
3632P	**Caster blocks, 30-degree, pink-anodized 6061-T6 aluminum (left & right)/ suspension screw pin (2)**
3632X	**Caster blocks, 30-degree, red-anodized 6061-T6 aluminum (left & right)/ suspension screw pin (2)**
1942	Rod ends (16 long & 4 short)/ hollow ball connectors (18)/ ball screws (2)
5525R	**Rod ends, heavy duty (Jato®/Slayer) (8)**
2742	Rod ends, long (6)/ hollow ball connectors (6)
5347	**Rod ends, Revo® (large) with hollow balls (12)**
2742X	Rod ends, short (6)/ hollow balls (6)
1844	Servo saver
3639	Shock tower (front)
3736	Steering blocks, left & right (2) (requires 5x11x4mm bushings or bearings)
3636A	**Steering blocks, Rustler®/Stampede®/Bandit (2), 6061-T6 aluminum (blue-anodized)/ 5x11mm ball bearings (4)**
3636G	**Steering blocks, Rustler®/Stampede®/Bandit (2), 6061-T6 aluminum (green-anodized)/ 5x11mm ball bearings (4)**
3636P	**Steering blocks, Rustler®/Stampede®/Bandit (2), 6061-T6 aluminum (pink-anodized)/ 5x11mm ball bearings (4)**
3636X	**Steering blocks, Rustler®/Stampede®/Bandit (2), 6061-T6 aluminum (red-anodized)/ 5x11mm ball bearings (4)**
3631	Suspension arms (front) (2)
3631X	**Suspension arms, black, front, heavy duty (2)**
3631A	**Suspension arms, blue, front, heavy duty (2)**
3631G	**Suspension arms, green, front, heavy duty (2)**
3631T	**Suspension arms, orange, front, heavy duty (2)**
3631R	**Suspension arms, red, front, heavy duty (2)**
3631L	**Suspension arms, white, front, heavy duty (2)**
3740	**Suspension pins, 2.5x29mm (king pins) w/ e-clips (2) (strengthens caster blocks)**
2640	**Suspension pins, 44mm (2) w/ E-clips (Use with tie bar to strengthen front bulkhead)**
3640	**Suspension screw pin set, steel (hex drive) (requires part #2640 for a complete suspension pin set) (Bandit, Rustler®, Stampede®)**
2537	Threaded rods (20/25/44mm 1 ea.)/ (1) 12mm set screw
2532	**Tie bar, fiberglass (requires suspension pins, part# 2640)**
3737A	**Turnbuckle, aluminum (blue-anodized), camber link, front, 39mm (1)(assembled w/rod ends)/ hollow balls (2) (See part 3741A for complete camber link set)**
3737	**Turnbuckle, aluminum (red-anodized), camber link, front, 39mm (1) (assembled w/rod ends)/ hollow balls (2)(See part 3741X for complete camber link set)**
3139	Turnbuckles (62mm) (front tie rods) (2)
3741A	**Turnbuckles, aluminum (blue-anodized), camber links, front, 39mm (2), rear, 49mm (2) (assembled w/rod ends & hollow balls)/ wrench**
2336A	**Turnbuckles, aluminum (blue-anodized), toe links, 61mm (2) (assembled w/ rod ends & hollow balls) (fits Stampede®) (requires 5mm aluminum wrench #5477)**
3741X	**Turnbuckles, aluminum (red-anodized), camber links, front, 39mm (2), rear, 49mm (2) (assembled w/ rod ends & hollow balls)/wrench**
2336X	**Turnbuckles, aluminum (red-anodized), toe links, 61mm (2) (assembled with rod ends & hollow balls) (fits Stampede®) (requires 5mm aluminum wrench #5477)**
3644	**Turnbuckles, camber link, 39mm (69mm center to center) (assembled with rod ends and hollow balls) (1 left, 1 right)**
3745	**Turnbuckles, toe link, 59mm (78mm center to center) (2) (assembled with rod ends and hollow balls)**
3645	**Turnbuckles, toe link, 61mm (96mm center to center) (2) (assembled with rod ends and hollow balls) (fits Stampede®)**

Hardware

1926	**Antenna caps, vinyl (2)/ antenna spool**
1726	Antenna, tube (1)/ vinyl antenna cap (1)/ wire retainer (1)
3642	**Shoulder screws, Ultra Shocks (3x12) (6)**
1552	**Motor screws (3x8mm hex cap) (6)/washers (6)/ wrench**
1834	Body clips (12) (standard size)
3934	Body clips, heavy duty (12)
1589	Double-sided adhesive tape (25mm x 25mm) (2)
2745	Nuts, 3mm nylon locking (12)
3647	Nuts, 4mm flanged nylon locking (steel, serrated) (8)
1747	Nuts, 4mm nylon locking (10)
1747R	**Nuts, aluminum, flanged, serrated (4mm) (blue-anodized) (4)**
1747G	**Nuts, aluminum, flanged, serrated (4mm) (green-anodized) (4)**
1747P	**Nuts, aluminum, flanged, serrated (4mm) (pink-anodized) (4)**
1747A	**Nuts, aluminum, flanged, serrated (4mm) (red-anodized) (4)**
1985	PTFE-coated washers, 5x8x0.5mm (20) (use with ball bearings)
1942	Rod ends (16 long & 4 short)/ hollow ball connectors (18)/ ball screws (2)
5525R	**Rod ends, heavy duty (Jato®/Slayer) (8)**
5347	**Rod ends, Revo® (large) with hollow balls (12)**
2742X	Rod ends, short (6)/ hollow balls (6)
3739	Screw pin set (Rustler®/ Bandit/ Stampede®)
3229	Screws, 2.5x10mm cap-head machine (hex drive) (6)
3965	Screws, 2.5x8mm cap-head machine (6)
2587	Screws, 3x10mm cap-head machine (6) (no washer)
2675	Screws, 3x10mm roundhead self-tapping (6)
2648	Screws, 3x12mm countersunk self-tapping (6)
3186	Screws, 3x12mm washerhead machine (6)
3286	Screws, 3x12mm washerhead self-tapping (6)
2563	Screws, 3x15mm roundhead machine (6)
3187	Screws, 3x15mm washerhead machine (6)
3288	Screws, 3x15mm washerhead self-tapping (6)
2566	Screws, 3x20mm roundhead machine (6)
2567	Screws, 3x23mm roundhead machine (6)
2572	Screws, 3x30mm roundhead machine (6)
2554	Screws, 3x6mm cap-head machine (hex drive) (6)
2558	Screws, 3x6mm roundhead machine (6)
3185X	Screws, 3x8mm washerhead machine (large head for motor mount) (6)
3290	Screws, 3x8mm washerhead self-tapping (6)
2548	Screws, 4x12mm countersunk machine (100-degree) (6)
2546	Screws, 4x15mm countersunk machine (hex drive) (6)
2573	Screws, 4x15mm roundhead machine (6)
5529	Shim set, 3x7x1mm (2), 3x6x0.5mm (4), 3x7x2mm (2)/ hollow balls, captured (4)
2754	Stub axle pins (4)
3740	Suspension pins, 2.5x29mm (king pins) w/ e-clips (2) (strengthens caster blocks)
2746	**Washers, 3x6mm metal (12)**

Motors & Electronics

1552	**Motor screws (3x8mm hex cap) (6)/washers (6)/ wrench**
2260	**BEC assembly (complete)**
3790	Gear adapter, fixed
2072A	**Gear set (for 2070, 2075 servos)**
1275	**Motor, Stinger (20-turn, 540 size) (requires 19-tooth pinion with factory installed spur gear on models originally equipped with the Titan 12T)**
3785	Motor, Titan® 12T (12-Turn, 550 size)
3351R	**Motor, Velineon® 3500, brushless (assembled with 12-gauge wire and gold-plated bullet connectors)**
3626R	Mounting plate, electronic speed control/receiver box (for installation of XL-5/VXL and waterproof receiver box into Stampede®)
2074	Servo case/gaskets (for 2056 and 2075 waterproof servos)
2053	Servo gears (for 2055, 2056 servos)
2075R	**Servo, digital high-speed, metal gear (ball bearing), waterproof**
2075	**Servo, digital high-torque (ball bearing), waterproof**
2075X	**Servo, digital high-torque, metal gear (ball bearing), waterproof**
2056	Servo, high-torque, waterproof (blue case)
3350R	**Velineon® VXL-3s Brushless Power System, waterproof (includes VXL-3s waterproof ESC, Velineon 3500 motor, and speed control mounting plate (part #3725R))**
3355R	**Velineon® VXL-3s Electronic Speed Control, waterproof (brushless) (fwd/rev/brake)**
3018R	XL-5 Electronic Speed Control, waterproof (land version, low-voltage detection, fwd/rev/brake)

Radio System, Batteries & Chargers

2842X	**5000mAh 7.4v 2-Cell 25C LiPo Battery**
2843X	**5800mAh 7.4v 2-Cell 25C LiPo Battery**
2869X	**7600mAh 7.4v 2-Cell 25C LiPo Battery**
2976	**AC to DC converter, 40W**

2938X	**Adapter, Traxxas® iD® LiPo battery (adapts Traxxas iD batteries to separate balance ports)**
1726	Antenna, tube (1)/ vinyl antenna cap (1)/ wire retainer (1)
2943	**Battery charge indicators (green (4), blue (4), grey (4))**
6548	Battery door, transmitter (replacement for #6516, 6517, 6528, 6529, 6530 transmitters)
2914	**Battery, Power Cell AA Alkaline (4)**
2922X	**Battery, Power Cell, 3000mAh (NiMH, 6-C flat, 7.2V)**
2923X	Battery, Power Cell, 3000mAh (NiMH, 7-C flat, 8.4V)
2926X	**Battery, Power Cell, 3000mAh (NiMH, 7-C hump, 8.4V)**
2942X	**Battery, Series 3 Power Cell, 3300mAh (NiMH, 6-C flat, 7.2V)**
2940X	**Battery, Series 3 Power Cell, 3300mAh (NiMH, 7-C flat, 8.4V)**
2941X	**Battery, Series 3 Power Cell, 3300mAh (NiMH, 7-C hump, 8.4V)**
2952X	**Battery, Series 4 Power Cell, 4200mAh (NiMH, 6-C flat, 7.2V)**
2950X	**Battery, Series 4 Power Cell, 4200mAh (NiMH, 7-C flat, 8.4V)**
2951X	**Battery, Series 4 Power Cell, 4200mAh (NiMH, 7-C hump, 8.4V)**
2960X	**Battery, Series 5 Power Cell, 5000mAh (NiMH, 7-C flat, 8.4V)**
2961X	**Battery, Series 5 Power Cell, 5000mAh (NiMH, 7-C hump, 8.4V)**
2984	**Battery/charger completer pack (includes #2969 2-amp NiMH peak detecting AC charger (1), #2926X 3000mAh 8.4V 7-cell NiMH battery (1))**
2992	**Battery/charger completer pack (includes #2970 iD® charger (1), #2843X 5800mAh 7.4V 2-cell 25C LiPo battery (1))**
2260	**BEC assembly (complete)**
2975	Charger, DC, 4 amp (6 - 7 cell, 7.2 - 8.4 volt, NiMH)
2972	**Charger, EZ-Peak® Dual, 100W, NiMH/LiPo with iD® Auto Battery Identification**
2973	**Charger, EZ-Peak® Live Dual, 200W, NiMH/LiPo with iD® Auto Battery Identification**
2971	**Charger, EZ-Peak® Live, 100W, NiMH/LiPo with iD® Auto Battery Identification**
2970	**Charger, EZ-Peak® Plus, 4 amp, NiMH/LiPo with iD® Auto Battery Identification**
6541	**Connector, power tap (with cable) (long)/ wire tie**
2978	**Fuse, charger, 5A (2) (for #2974, 2975, 2977)**
2072A	**Gear set (for 2070, 2075 servos)**
2968X	**LiPo cell voltage checker/balancer (includes #2938X adapter for Traxxas® iD® batteries)**
2968	**LiPo cell voltage checker/balancer (requires #2938X adapter for Traxxas® iD® batteries)**
6535	**Mount, temperature sensor (electric motors)/ wire tie/ thermal pad**
6519	Receiver, micro, TQ 2.4GHz (3-channel)
6518	**Receiver, micro, TQi 2.4GHz with telemetry (5-channel)**
6526	**Sensor, auto-detectable, temperature**
6527	**Sensor, auto-detectable, voltage**
6522	**Sensor, RPM (short)/ 3x4mm BCS (2)**
6521	**Sensor, temperature and voltage (long)**
2074	Servo case/gaskets (for 2056 and 2075 waterproof servos)
2053	Servo gears (for 2055, 2056 servos)
2075R	**Servo, digital high-speed, metal gear (ball bearing), waterproof**
2075	**Servo, digital high-torque (ball bearing), waterproof**
2075X	**Servo, digital high-torque, metal gear (ball bearing), waterproof**
2056	Servo, high-torque, waterproof (blue case)
6553X	**Telemetry expander 2.0 and GPS module 2.0, TQi radio system**
6550X	**Telemetry expander 2.0, TQi radio system (for use only with #6551X GPS module)**
6551X	**Telemetry GPS module 2.0, TQi radio system (for use only with #6550X telemetry expander)**
6538	**Telemetry trigger magnet holders, spur gear/ magnet, 5x2mm (1)/ 3x8mm CCS (3)/ 3x10mm CCS (3)**
6540	**Telemetry trigger magnet, 5X2mm (1)**
6516	Transmitter, TQ 2.4GHz, 2-channel (transmitter only)
6528	**Transmitter, TQi Traxxas Link™ enabled, 2.4GHz high output, 2-channel (transmitter only)**
6529	**Transmitter, TQi Traxxas Link™ enabled, 2.4GHz high output, 3-channel (transmitter only)**
6530	**Transmitter, TQi Traxxas Link™ enabled, 2.4GHz high output, 4-channel (transmitter only)**
6511	**Traxxas Link™ Wireless Module**
6537	**Wire retainers, gear cover/ 3x4mm BCS (2)**
3018R	XL-5 Electronic Speed Control, waterproof (land version, low-voltage detection, fwd/rev/brake)

Ready-To-Race Model

36034-1	Bigfoot® No. 1: 1/10 Scale Officially Licensed Replica Monster Truck with TQ 2.4GHz radio system

Rear Suspension

5116	**Ball bearings, blue rubber sealed (5x11x4mm) (2)**
1675	Bushings, self-lubricating (5x11x4mm) (14)
3739	Screw pin set (Rustler®/ Bandit/ Stampede®)
3638	Shock tower (rear)
3752	Stub axle carriers (2) (requires 5x11x4mm bushngs and bearings)
3652A	**Stub axle carriers, Rustler®/Stampede®/Bandit (2), 6061-T6 aluminum (blue-anodized)/ 5x11mm ball bearings (4)**
3652G	**Stub axle carriers, Rustler®/Stampede®/Bandit (2), 6061-T6 aluminum (green-anodized)/ 5x11mm ball bearings (4)**
3652P	**Stub axle carriers, Rustler®/Stampede®/Bandit (2), 6061-T6 aluminum (pink-anodized)/ 5x11mm ball bearings (4)**
3652X	**Stub axle carriers, Rustler®/Stampede®/Bandit (2), 6061-T6 aluminum (red-anodized)/ 5x11mm ball bearings (4)**
2753X	Stub axles, rear (2)
3655P	**Suspension arms, blue, front/rear (left & right), heavy duty (2)**
3655R	**Suspension arms, front/rear (left & right), heavy duty (2)**
3655G	**Suspension arms, green, front/rear (left & right), heavy duty (2)**
3655X	Suspension arms, left & right
3655T	**Suspension arms, orange, front/rear (left & right), heavy duty (2)**
3655L	**Suspension arms, red, front/rear (left & right), heavy duty (2)**
3655A	**Suspension arms, white, front/rear (left & right), heavy duty (2)**
3640	**Suspension screw pin set, steel (hex drive) (requires part #2640 for a complete suspension pin set) (Bandit, Rustler®, Stampede®)**

Shocks (Pro-level Aluminum)

2664	**Big Bore shock cylinder (long) (1)**
2666	**Big Bore shock cylinder (XX-long) (1)**
5862	**Big Bore shocks (hard-anodized & PTFE-coated T6 aluminum) (assembled with TiN shafts and springs) (front & rear) (4)**
2660	**Big Bore shocks (long) (hard-anodized & PTFE-coated T6 aluminum) (assembled with TiN shafts) w/o springs (front) (2)**
2662	**Big Bore shocks (XX-long) (hard-anodized & PTFE-coated T6 aluminum) (assembled with TiN shafts) w/o springs (rear) (2)**
2669	**Piston head set (2-hole (2)/ 3-hole (2))/ shock mounting bushings & washers (2) (Big Bore Shocks)**
2362	**Rebuild kit, Ultra shocks (for 2 shocks)**
1942	Rod ends (16 long & 4 short)/ hollow ball connectors (18)/ ball screws (2)
2742X	Rod ends, short (6)/ hollow balls (6)
2667	**Shock caps, aluminum (Big Bore Shocks) (2)**
1664T	**Shock shafts, hardened steel, titanium nitride coated (long) (2)**
2656T	**Shock shafts, hardened steel, titanium nitride coated (xx-long) (2)**
1664	Shock shafts, steel, chrome finish (long) (2)
2656	Shock shafts, steel, chrome finish (xx-long) (2)
1765	Silicone diaphragms (4)
1666	Silicone shock oil (30 wt)
2668	**Spring retainers, upper & lower (2)/ spring pre-load spacers: 1mm (4)/ 1.5mm (2)/ 2mm (2)/ 4mm (2)/ 8mm (2) (Big Bore Shocks)**
5860	**Springs, front (white) (progressive rate) (2) (fits #5862 aluminum Big Bore shocks)**
5859	**Springs, rear (white) (progressive rate) (2) (fits #5862 aluminum Big Bore shocks)**

Shocks (Ultra Shocks)

3642	**Shoulder screws, Ultra Shocks (3x12) (6)**
3765A	**Body, Ultra Shock(s) (long) (grey) (2)**
3766A	**Body, Ultra Shock(s) (XXL) (grey) (2)**
2362	**Rebuild kit, Ultra shocks (for 2 shocks)**
1942	Rod ends (16 long & 4 short)/ hollow ball connectors (18)/ ball screws (2)
2742X	Rod ends, short (6)/ hollow balls (6)
3767	**Shock caps (2)/ shock bottoms (2)**
8361	Shock caps (black) (4) (assembled with hollow balls)
3767A	**Shock caps, aluminum (blue-anodized) (4) (fits all Ultra Shocks)**
3767G	**Shock caps, aluminum (green-anodized) (4) (fits all Ultra Shocks)**
3767P	**Shock caps, aluminum (pink-anodized) (4) (fits all Ultra Shocks)**
3767X	**Shock caps, aluminum (red-anodized) (4) (fits all Ultra Shocks)**
1664T	**Shock shafts, hardened steel, titanium nitride coated (long) (2)**
2656T	**Shock shafts, hardened steel, titanium nitride coated (xx-long) (2)**
1664	Shock shafts, steel, chrome finish (long) (2)
2656	Shock shafts, steel, chrome finish (xx-long) (2)
1765	Silicone diaphragms (4)
1666	Silicone shock oil (30 wt)
3769	Spring pre-load spacers: 1mm (4)/ 2mm (2)/ 4mm (2)/ 8mm (2)
3768	Spring retainers, upper & lower (2)/ piston head set (2-hole (2)/ 3-hole (2))
3758	**Springs, front (black) (2)**
3758T	**Springs, front (blue) (2)**
3758A	**Springs, front (green) (2)**
3758P	**Springs, front (pink) (2)**
3758R	Springs, front (red) (2)
3758X	**Springs, front (white) (2)**

BIGFOOT® (36084-1/36034-1)

3757	**Springs, rear (black) (2)**
3757T	**Springs, rear (blue) (2)**
3757A	**Springs, rear (green) (2)**
3757P	**Springs, rear (pink) (2)**
3757R	Springs, rear (red) (2.9 rate) (2)
3757X	**Springs, rear (white) (2)**
4957	**Springs, red (for Ultra Shocks only) (2.5 rate) (f/r) (2)**
3760	Ultra Shocks (black) (long) (complete w/ spring pre-load spacers & springs) (front) (2)
3762	Ultra Shocks (black) (xx-long) (complete w/ spring pre-load spacers & springs) (rear) (2)
3760A	**Ultra Shocks (grey) (long) (complete w/ spring pre-load spacers & springs) (2)**
3762A	**Ultra Shocks (grey) (xx-long) (complete w/ spring pre-load spacers & springs) (rear) (2)**

Slipper Clutch Components

3793	Input shaft (slipper shaft) / spring pin
5552X	Rebuild kit, slipper clutch (steel disc/ friction pads (3)/ spring (2)/ pin/ 4.0mm NL (1)/ 5.0mm NL (1))
2554	Screws, 3x6mm cap-head machine (hex drive) (6)
5556	Slipper pressure plate & hub (aluminum alloy)

Spur Gears & Pinion Gears

3790	Gear adapter, fixed
2427	Gear, 14-T pinion (48-pitch)/ set screw
2416	**Gear, 16-T pinion (48-pitch) / set screw**
1918	**Gear, 18-T pinion (48-pitch) / set screw**
2419	**Gear, 19-T pinion (48-pitch) / set screw**
2423	**Gear, 23-T pinion (48-pitch) / set screw**
4725	**Gear, pinion (25-tooth) (48-pitch) / set screw**
4676	**Spur gear, 76-tooth (48-pitch) (for models with Torque-Control slipper clutch)**
4683	**Spur gear, 83-tooth (48-pitch) (for models with Torque-Control slipper clutch)**
4686	**Spur gear, 86-tooth (48-pitch) (for models with Torque-Control slipper clutch)**
4690	Spur gear, 90-tooth (48-pitch) (for models with Torque-Control slipper clutch)

Steering Components

2728	**Ball bearings (5x8x2.5mm) (2)**
2545	Bellcrank bushings (plastic) (5x8x2.5mm) (4)
2742	Rod ends, long (6)/ hollow ball connectors (6)
1844	Servo saver
2336	Turnbuckles, 78mm (2)
2336A	**Turnbuckles, aluminum (blue-anodized), toe links, 61mm (2) (assembled w/ rod ends & hollow balls) (fits Stampede®) (requires 5mm aluminum wrench #5477)**
2336X	**Turnbuckles, aluminum (red-anodized), toe links, 61mm (2) (assembled with rod ends & hollow balls) (fits Stampede®) (requires 5mm aluminum wrench #5477)**
3645	**Turnbuckles, toe link, 61mm (96mm center to center) (2) (assembled with rod ends and hollow balls) (fits Stampede®)**

Suspension Linkage

3642	**Shoulder screws, Ultra Shocks (3x12) (6)**
3641A	**Camber link set (plastic / non-adjustable) (front & rear) (grey)**
3641	Camber link set (plastic/ non-adjustable) (front & rear) (black)
1942	Rod ends (16 long & 4 short)/ hollow ball connectors (18)/ ball screws (2)
2742	Rod ends, long (6)/ hollow ball connectors (6)
2742X	Rod ends, short (6)/ hollow balls (6)
3739	Screw pin set (Rustler®/ Bandit/ Stampede®)
3740	**Suspension pins, 2.5x29mm (king pins) w/ e-clips (2) (strengthens caster blocks)**
2637	**Suspension pins, 31.5mm, chrome (2) w/ E-clips (4)**
2640	**Suspension pins, 44mm (2) w/ E-clips (Use with tie bar to strengthen front bulkhead)**
3640	**Suspension screw pin set, steel (hex drive) (requires part #2640 for a complete suspension pin set) (Bandit, Rustler®, Stampede®)**
3737A	**Turnbuckle, aluminum (blue-anodized), camber link, front, 39mm (1)(assembled w/rod ends)/ hollow balls (2) (See part 3741A for complete camber link set)**
3738A	**Turnbuckle, aluminum (blue-anodized), camber link, rear, 49mm (1) (assembled w/ rod ends & hollow balls) (See part 3741A for complete camber link set)**
3737	**Turnbuckle, aluminum (red-anodized), camber link, front, 39mm (1) (assembled w/rod ends)/ hollow balls (2)(See part 3741X for complete camber link set)**
3738	**Turnbuckle, aluminum (red-anodized), camber link, rear, 49mm (1) (assembled with rod ends & hollow balls) (See part 3741X for complete camber link set)**
1937	**Turnbuckles (54mm) (2)/ 3x6x4mm aluminum spacers (rear camber links)**
2336	**Turnbuckles, 78mm (optional rear camber rods) (2)**
3741A	**Turnbuckles, aluminum (blue-anodized), camber links, front, 39mm (2), rear, 49mm (2) (assembled w/rod ends & hollow balls)/ wrench**
2336A	**Turnbuckles, aluminum (blue-anodized), toe links, 61mm (2) (assembled w/ rod ends & hollow balls) (fits Stampede®) (requires 5mm aluminum wrench #5477)**
3741X	**Turnbuckles, aluminum (red-anodized), camber links, front, 39mm (2), rear, 49mm (2) (assembled w/ rod ends & hollow balls)/wrench**
2336X	**Turnbuckles, aluminum (red-anodized), toe links, 61mm (2) (assembled with rod ends & hollow balls) (fits Stampede®) (requires 5mm aluminum wrench #5477)**
3644	**Turnbuckles, camber link, 39mm (69mm center to center) (assembled with rod ends and hollow balls) (1 left, 1 right)**
3643	**Turnbuckles, camber link, 49mm (82mm center to center) (assembled with rod ends and hollow balls) (1 left, 1 right)**
3645	**Turnbuckles, toe link, 61mm (96mm center to center) (2) (assembled with rod ends and hollow balls) (fits Stampede®)**

Team Traxxas Items

2514	**Decal sheet, racing sponsors**
6160X	**DVD, Maxx® Power! Full Throttle Action (sleeve)**
9950	**Official Team Traxxas® racing decal set (flag logo/ 6-color)**
9909	**Traxxas® racing banner, red & black (3x7 feet)**

Tires & Wheels

5116	Ball bearings, blue rubber sealed (5x11x4mm) (2)
1675	Bushings, self-lubricating (5x11x4mm) (14)
5854	**Hub retainer, 17mm hubs, M4 X 0.7 (4) (use with #5853X, #6856X, #6469)**
3647	Nuts, 4mm flanged nylon locking (steel, serrated) (8)
1747R	**Nuts, aluminum, flanged, serrated (4mm) (blue-anodized) (4)**
1747G	**Nuts, aluminum, flanged, serrated (4mm) (green-anodized) (4)**
1747P	**Nuts, aluminum, flanged, serrated (4mm) (pink-anodized) (4)**
1985	PTFE-coated washers, 5x8x0.5mm (20) (use with ball bearings)
1647	Silicone grease
2754	Stub axle pins (4)
3689	**Tires & wheels, assembled, glued (2.8") (All-Star black chrome wheels, paddle tires, foam inserts) (2WD electric rear) (2) (TSM rated)**
3668A	**Tires & wheels, assembled, glued (2.8") (All-Star black chrome wheels, Talon tires, foam inserts) (2WD electric rear) (2) (TSM rated)**
3669A	**Tires & wheels, assembled, glued (2.8") (All-Star black chrome wheels, Talon tires, foam inserts) (nitro rear/ electric front) (2) (TSM rated)**
3668	**Tires & wheels, assembled, glued (2.8") (All-Star chrome wheels, Talon tires, foam inserts) (2WD electric rear) (2)**
3669	**Tires & wheels, assembled, glued (2.8") (All-Star chrome wheels, Talon tires, foam inserts) (nitro rear/ electric front) (2)**
3663X	Tires & wheels, assembled, glued (chrome wheels, Terra Groove dual profile tires, foam inserts) (2WD electric rear) (2)
3665X	Tires & wheels, assembled, glued (chrome wheels, Terra Groove dual profile tires, foam inserts) (nitro rear/ electric front) (2)
3663	**Tires & wheels, assembled, glued (satin chrome wheels, Terra Groove dual profile tires, foam inserts) (2WD electric rear) (2)**
3665	**Tires & wheels, assembled, glued (satin chrome wheels, Terra Groove dual profile tires, foam inserts) (nitro rear/ electric front) (2)**
6771	**Tires and wheels, assembled, glued 2.8" (All-Star chrome wheels, Maxx® tires, foam inserts) (2)**
6770	**Tires, Maxx® 2.8" (2)/ foam inserts (2)**
3671	**Tires, Talon 2.8" (2)/ foam inserts (2)**
3667	Tires, Terra Groove (dual profile 5.3"x2.7"- 2.0") (2)/ foam inserts (2)
1654	Wheel hubs, hex (rear) (2)/ stub axle pins (2)
3654	Wheel hubs, hex (front) (tall offset) (2)/ axle pins (2.5x12mm) (2)
5853X	**Wheel hubs, splined, 17mm, short (2), long (2)/wheel nuts, splined, 17mm (4) (blue-anodized)/ hub retainer M4x0.7 (4)/axle pin (4)/wrench, 5mm**
5353	**Wheel nuts, splined, 17mm (blue-anodized) (4)**
5480X	**Wheel wrench, splined, 17mm**
3772A	**Wheels, All-Star 2.8" (black chrome) (2WD electric rear)**
5576A	**Wheels, All-Star 2.8" (black chrome) (nitro rear/ electric front) (2)**
3772	**Wheels, All-Star 2.8" (chrome) (2WD electric rear)**
5576	**Wheels, All Star 2.8" (chrome) (2) (Rustler/Stampede front)**
3673	**Wheels, chrome (2.2") (front) (2)**
3672	**Wheels, chrome (2.2") (rear) (2)**
3675	**Wheels, dyeable nylon 2.2 (front) (2)**
3674	**Wheels, dyeable nylon 2.2 (rear) (2)**
3664	**Wheels, satin chrome, dual profile (2.0" outer, 3.0" inner) (2WD electric rear) (2)**

3666 **Wheels, satin chrome, dual profile (2.0" outer, 3.0" inner) (nitro rear/ electric front) (2)**
3774 **Wheels, Twin-Spoke 2.8" (chrome) (2WD electric rear) (2)**
5572 **Wheels, Twin-Spoke 2.8" (chrome) (nitro rear/ electric front) (2)**

Transmission Components

1552 **Motor screws (3x8mm hex cap) (6)/washers (6)/ wrench**
4607 **Ball bearings (5x11x4mm) (8)**
5116 Ball bearings, blue rubber sealed (5x11x4mm) (2)
3792 Cover, gear/ rubber gear cover plug/ 3x6 RM (2)
5478 **Flat wrench, 8mm (blue-anodized aluminum)**
3790 Gear adapter, fixed
3691 Gearbox halves (l&r) (black) w/ idler gear shaft
3691A **Gearbox halves (l&r) (grey) w/ idler gear shaft**
5148 Grease, white lithium
1996 **Idler gear (30-tooth)**
3696 Idler gear, steel (30-tooth)
3793 Input shaft (slipper shaft) / spring pin
2381X Main diff with steel ring gear/ side cover plate/ screws (Bandit, Stampede®, Rustler®)
2382 Planet gears (4)/ planet shafts (4)/ sun gears (2)/sun gear alignment shaft (1) all hardened steel
2388X Planetary gear differential with steel ring gear (complete) (fits Bandit, Stampede®, Rustler®)
5552X Rebuild kit, slipper clutch (steel disc/ friction pads (3)/ spring (2)/ pin/ 4.0mm NL (1)/ 5.0mm NL (1))
2554 Screws, 3x6mm cap-head machine (hex drive) (6)
3185X Screws, 3x8mm washerhead machine (large head for motor mount) (6)
1647 Silicone grease
5556 Slipper pressure plate & hub (aluminum alloy)
3195 Top drive gear, steel (22-tooth)

Traxxas Tools

3433X **Body reamer (aluminum handle)**
3433 **Body reamer (plastic handle)**
3436 **Cap, body reamer**
3432 **Scissors, curved tip**
3431 **Scissors, straight tip**
8712 **Speed Bit Essentials Set, hex and nut driver, 7-piece, includes premium handle (medium), travel pouch, hex drivers (straight: 1.5mm, 2.0mm, 2.5mm) and nut drivers (5.0mm, 5.5mm, 7.0mm, and 8.0mm), 1/4" drive**
8721 **Speed bit handle, medium (one piece)**
8720 **Speed bit handle, premium, large (rubber overmold)**
8722 **Speed bit handle, premium, medium (rubber overmold)**
8710 **Speed Bit Master Set, hex and nut driver, 13-piece, includes premium handle (medium), travel pouch, hex drivers (straight: 1.5mm, 2.0mm, 2.5mm, 3.0mm), (ball-end: 2.0mm, 2.5mm, 3.0mm), and nut drivers (4.00mm, 4.50mm, 5.00mm, 5.50mm, 7.00mm, 8.00mm),**
8711 **Speed Bit Master Set, hex driver, 7-piece straight and ball end, includes premium handle (medium), travel pouch, hex drivers (straight: 1.5mm, 2.0mm, 2.5mm, 3.0mm) (ball end: 2.0mm, 2.5mm, 3.0mm), 1/4" drive**
8719 **Speed Bit Master Set, nut driver, 6-piece, includes premium handle (medium), travel pouch, and nut drivers (4.0mm, 4.5mm, 5.0mm, 5.5mm, 7.0mm, 8.0mm), 1/4" drive**
8716 **Speed Bit Set, hex driver, 2-piece ball-end (2.0mm, 2.5mm), 1/4" drive**
8716X **Speed Bit Set, hex driver, 3-piece ball-end (2.0mm, 2.5mm, 3.0mm), 1/4" drive**
8715 **Speed Bit Set, hex driver, 3-piece straight (1.5mm, 2.0mm, 2.5mm), 1/4" drive**
8715X **Speed Bit Set, hex driver, 4-piece straight (1.5mm, 2.0mm, 2.5mm, 3.0mm), 1/4" drive**
3415 **Tool set with pouch (includes 1.5mm, 2.0mm, 2.5mm, 3.0mm, 3.5mm, 4mm drivers/ 4mm, 5mm, 5.5mm, 7mm and 8mm nut drivers/ 2mm, 4mm, and 5mm slotted screwdrivers/ #00 Phillips, #0 Phillips, and #1 Phillips screwdrivers/ 4mm and 8mm wrench/ driver handle**

Turnbuckles & Threaded Rods

1942 Rod ends (16 long & 4 short)/ hollow ball connectors (18)/ ball screws (2)
5525R **Rod ends, heavy duty (Jato®/Slayer) (8)**
2742 Rod ends, long (6)/ hollow ball connectors (6)
5347 **Rod ends, Revo® (large) with hollow balls (12)**
2742X Rod ends, short (6)/ hollow balls (6)
3737A **Turnbuckle, aluminum (blue-anodized), camber link, front, 39mm (1)(assembled w/rod ends)/ hollow balls (2) (See part 3741A for complete camber link set)**
3738A **Turnbuckle, aluminum (blue-anodized), camber link, rear, 49mm (1) (assembled w/ rod ends & hollow balls) (See part 3741A for complete camber link set)**
3737 **Turnbuckle, aluminum (red-anodized), camber link, front, 39mm (1) (assembled w/rod ends)/ hollow balls (2)(See part 3741X for complete camber link set)**
3738 **Turnbuckle, aluminum (red-anodized), camber link, rear, 49mm (1) (assembled with rod ends & hollow balls) (See part 3741X for complete camber link set)**
1937 **Turnbuckles (54mm) (2)/ 3x6x4mm aluminum spacers (rear camber links)**
2336 **Turnbuckles, 78mm (optional rear camber rods) (2)**
3741A **Turnbuckles, aluminum (blue-anodized), camber links, front, 39mm (2), rear, 49mm (2) (assembled w/rod ends & hollow balls)/ wrench**
2336A **Turnbuckles, aluminum (blue-anodized), toe links, 61mm (2) (assembled w/ rod ends & hollow balls) (fits Stampede®) (requires 5mm aluminum wrench #5477)**
3741X **Turnbuckles, aluminum (red-anodized), camber links, front, 39mm (2), rear, 49mm (2) (assembled w/ rod ends & hollow balls)/wrench**
2336X **Turnbuckles, aluminum (red-anodized), toe links, 61mm (2) (assembled with rod ends & hollow balls) (fits Stampede®) (requires 5mm aluminum wrench #5477)**
3645 **Turnbuckles, toe link, 61mm (96mm center to center) (2) (assembled with rod ends and hollow balls) (fits Stampede®)**

If you have questions or need technical assistance, call Traxxas at:

1-888-TRAXXAS

(1-888-872-9927) (U.S. residents only)

For orders, calls outside the U.S., and other information, call 972-549-3000, or fax to 972-549-3011 e-mail Traxxas at support@Traxxas.com

TRAXXAS.COM

BIGFOOT® [and/or other applicable mark(s)] is a registered trademark of BIGFOOT 4X4, Inc.
FIRESTONE and the FIRESTONE logo are trademarks of Bridgestone Brands, LLC and Bridgestone Licensing Services, Inc.
©2016 BIGFOOT 4X4, Inc., 2286 Rose Lane, Pacific, MO 63069 USA
Bigfoot4x4.com. All Rights Reserved.

REV. 201002 1244

Fiesta ST Rally · Stampede 4X4 · Rustler 4x4
Stampede 4x4 VXL · Rustler 4x4 VXL · Slash 4x4
Slash 4x4 Ultimate/Platinum · Slash 4x4 VXL · Hoss 4x4 VXL





















4X4 PERFORMANCE
READY-TO-RACE®

Whether it's the performance-optimized low-CG chassis of the Traxxas 1/10 Rally, the proven Velineon brushless power system of the Slash 4X4, or the high performance of the Hoss 4X4 VXL, no surface is off limits. Experience all-weather rally racing excitement and built Traxxas-Tough off-roading fun. All the exciting driving that you expect from Traxxas, The Fastest Name In Radio Control.

TRAXXAS®
The Fastest Name In Radio Control®

Fiesta ST Rally

MODEL 74054-4

1/10 SCALE 4WD
RALLY CAR



2.2" PRE-GLUED TIRES WITH FOAM INSERTS

WATERPROOF XL-5 ESC AND TITAN 12T MOTOR

TQ 2.4GHz TRANSMITTER

Official Licensed Product

All other copyrights or trademarks are the property of their respective owners and are being used under license.

Ford Motor Company Trademarks and Trade Dress used under license to Traxxas.

MULTI-TERRAIN VERSATILITY, 4WD PERFORMANCE!

To be successful, a full-size rally car must offer blistering performance on pavement, dirt-roosting speed off-road, a trick suspension, and 4WD to put the power down. Modeled after the full-size Ford Fiesta ST, the Traxxas Rally car puts you in the driver's seat for all the action. The Rally car is specially tuned with a low center of gravity (Low-CG) chassis and oil-filled Ultra Shocks™ to be agile on the track. When the pavement ends, its full-time 4WD, long-travel suspension, and rally-bred tires dig in for ultra-fast bumper-to-bumper racing action. The powerful Titan 550 motor muscles you to the front of the pack and waterproof electronics allow authentic all-weather racing. The Traxxas Rally car is Ready-To-Race®, and built Traxxas-Tough for versatile, exciting driving fun that could only come from Traxxas.

Fiesta ST Rally Front Assembly

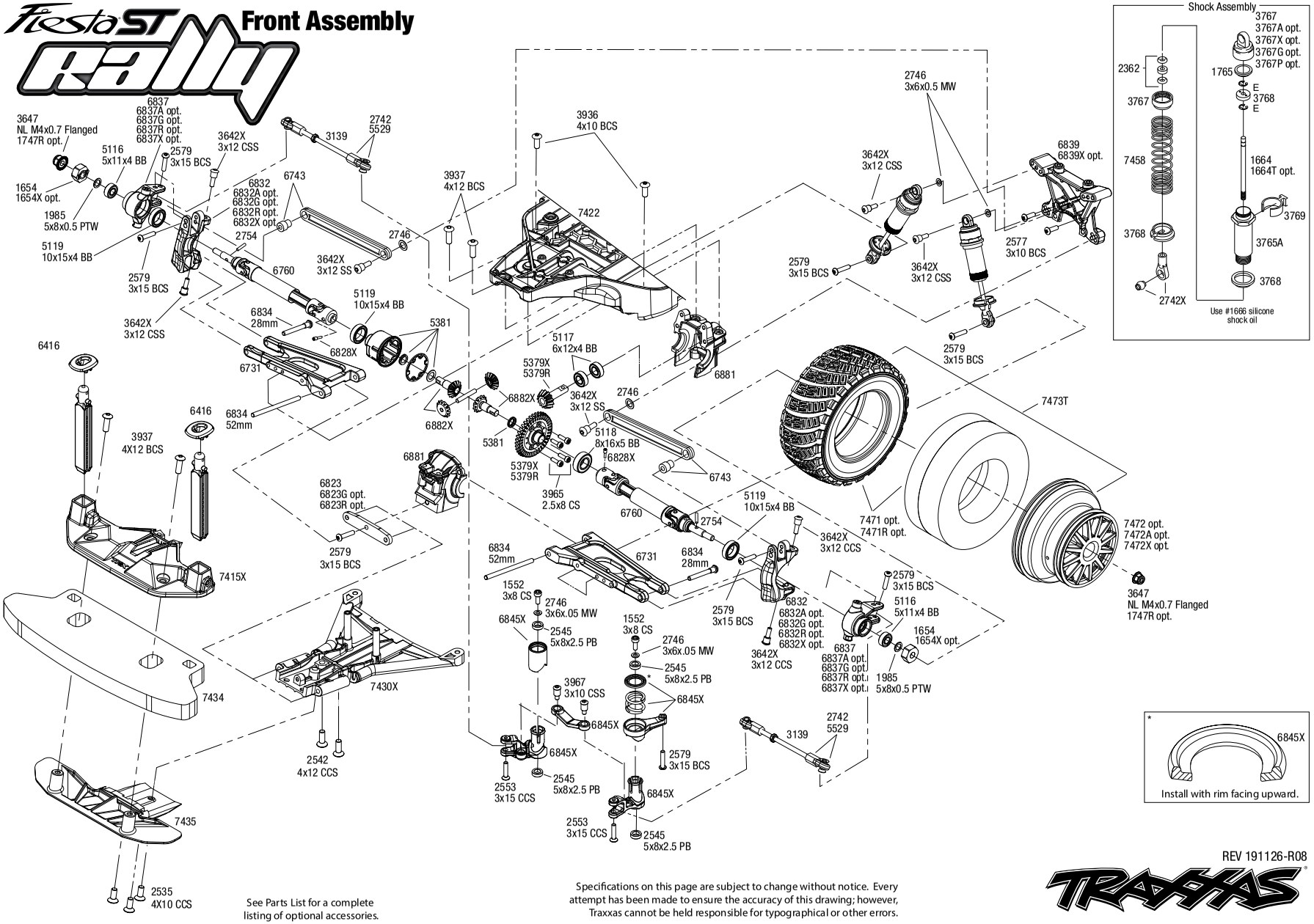

See Parts List for a complete listing of optional accessories.

Specifications on this page are subject to change without notice. Every attempt has been made to ensure the accuracy of this drawing; however, Traxxas cannot be held responsible for typographical or other errors.

REV 191126-R08

TRAXXAS

Questions? **Call toll-free, 1-888-TRAXXAS**

FIESTA ST RALLY (74054-4)

Chassis Assembly

See Parts List for a complete listing of optional accessories.

Specifications on this page are subject to change without notice. Every attempt has been made to ensure the accuracy of this drawing; however, Traxxas cannot be held responsible for typographical or other errors.

REV 191126-R08

Fiesta ST Rally — Rear Assembly

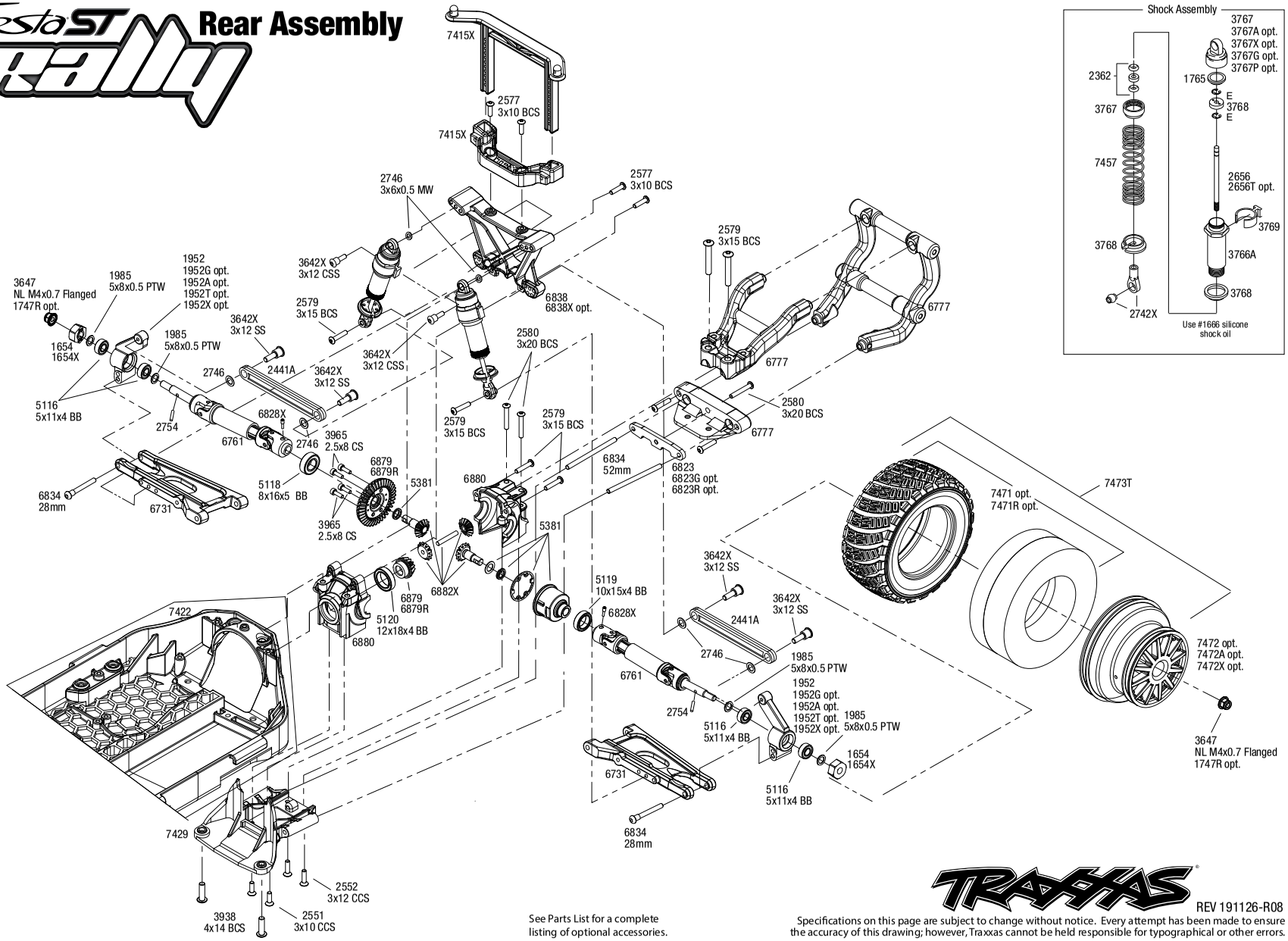

See Parts List for a complete listing of optional accessories.

REV 191126-R08

Specifications on this page are subject to change without notice. Every attempt has been made to ensure the accuracy of this drawing; however, Traxxas cannot be held responsible for typographical or other errors.

Questions? **Call toll-free, 1-888-TRAXXAS**

Fiesta ST Rally Transmission Assembly

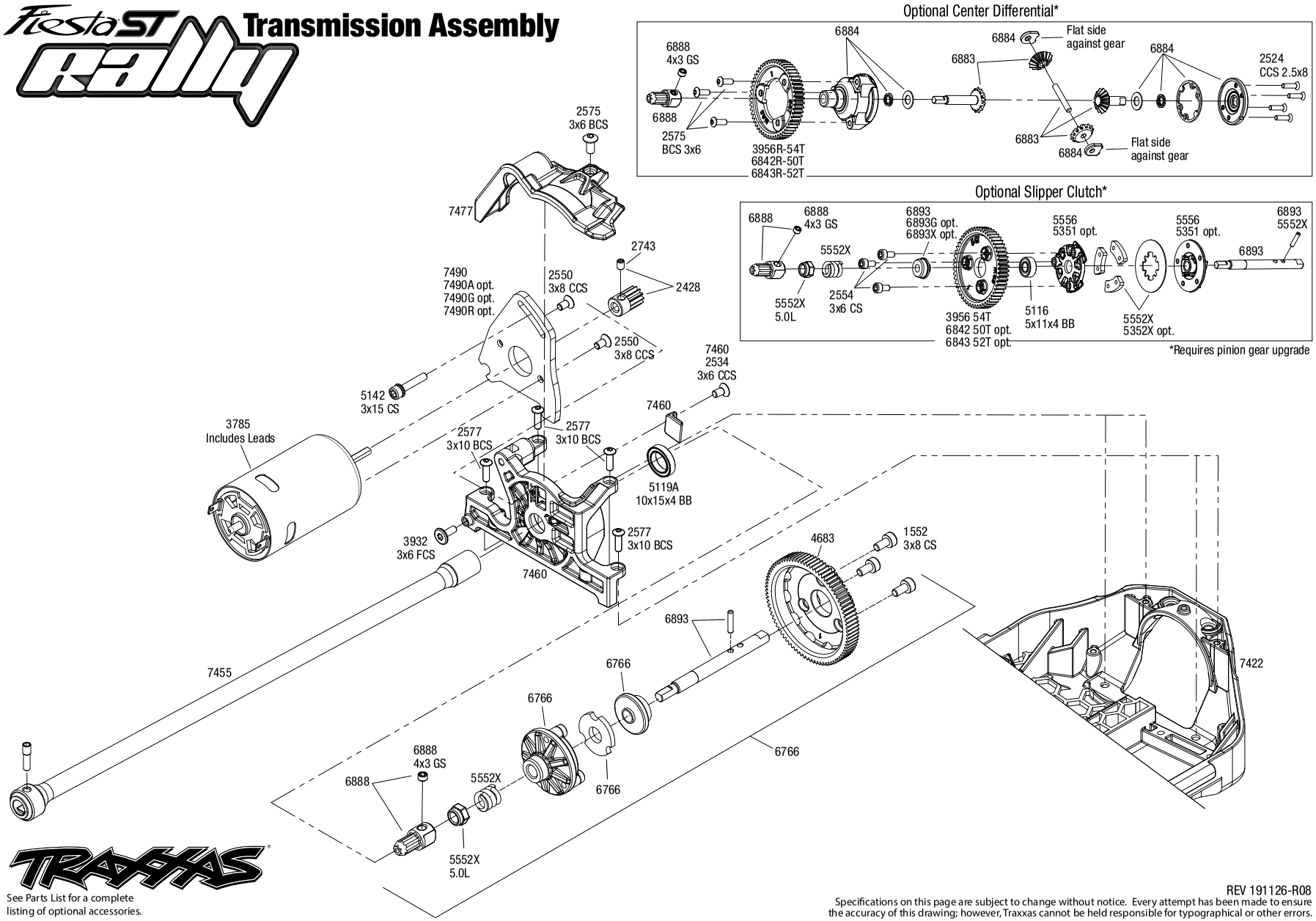

See Parts List for a complete listing of optional accessories.

REV 191126-R08

Specifications on this page are subject to change without notice. Every attempt has been made to ensure the accuracy of this drawing; however, Traxxas cannot be held responsible for typographical or other errors.

Driveshafts

Front Driveshaft Assembly
Available fully assembled as part #6760

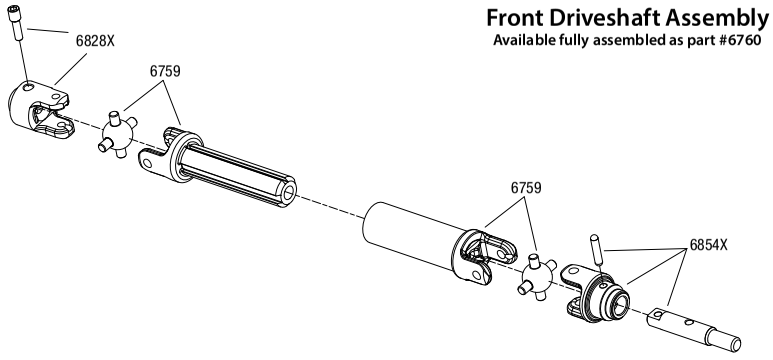

Rear Driveshaft Assembly
Available fully assembled as part #6761

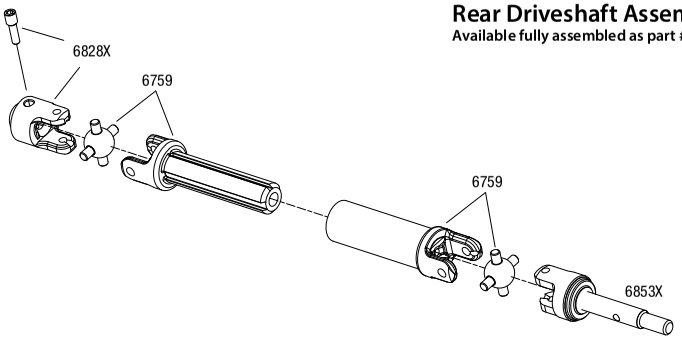

Modular Assembly

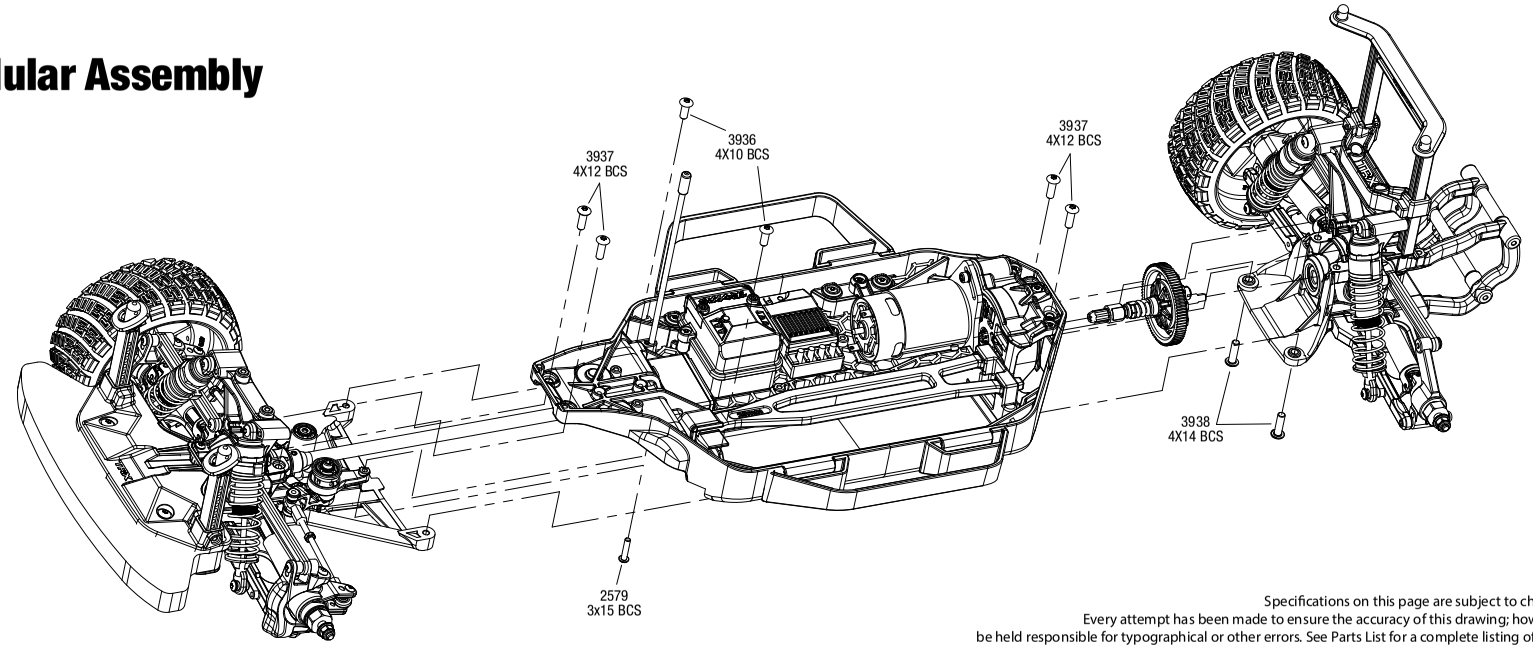

REV 191126-R08

Specifications on this page are subject to change without notice.
Every attempt has been made to ensure the accuracy of this drawing; however, Traxxas cannot be held responsible for typographical or other errors. See Parts List for a complete listing of optional accessories.

FIESTA ST RALLY (74054-4)

PARTS SHOWN IN BOLD ARE OPTIONAL ACCESSORIES.

Part categories and individual part listings are arranged alphabetically.

Bearings & Bushings

4607	**Ball bearings (5x11x4mm) (8)**
4612	**Ball bearings (10x15x4mm) (2)**
2728	**Ball bearings (5x8x2.5mm) (2)**
5119A	Ball bearings, black rubber sealed (10x15x4mm) (2)
5119	Ball bearings, blue rubber sealed (10x15x4mm) (2)
5120	Ball bearings, blue rubber sealed (12x18x4mm) (2)
5116	Ball bearings, blue rubber sealed (5x11x4mm) (2)
5117	Ball bearings, blue rubber sealed (6x12x4mm) (2)
5118	Ball bearings, blue rubber sealed (8x16x5mm) (2)
2545	Bellcrank bushings (plastic) (5x8x2.5mm) (4)
3934	Body clips, heavy duty (12)
1985	PTFE-coated washers, 5x8x0.5mm (20) (use with ball bearings)

Body & Accessories

1926	Antenna caps, vinyl (2)/ antenna spool
1726	Antenna, tube (1)/ vinyl antenna cap (1)/ wire retainer (1)
7434	Body bumper, foam (low profile) (use with #7435 front skidplate)
3935	**Body clip (mounting clip), angled, 90-degrees (10)**
3935A	**Body clip (mounting clip), angled, 90-degrees (black) (10)**
3934	Body clips, heavy duty (12)
6416	Body mount posts (2)/ body post pivot (2)/ screw pins, 2.5x18mm (2)
7415X	Body mounts, front & rear/ body post, rear (1)
1815	Body washers (8)
6716	**Body washers, foam, 2mm (2)/ 3mm (2)/ 4mm (4)**
7412	**Body, Ford Fiesta® ST Rally (clear, requires painting)**
7416	**Body, Ford Fiesta® ST Rally (painted, decals applied)**
2514	**Decal sheet, racing sponsors**
9950	**Official Team Traxxas® racing decal set (flag logo/ 6-color)**
7413	Wing, Ford Fiesta® ST Rally (black)/ 3x8 FCS (4)

Center Driveline

5119A	Ball bearings, black rubber sealed (10x15x4mm) (2)
5119	Ball bearings, blue rubber sealed (10x15x4mm) (2)
5120	Ball bearings, blue rubber sealed (12x18x4mm) (2)
5116	Ball bearings, blue rubber sealed (5x11x4mm) (2)
5117	Ball bearings, blue rubber sealed (6x12x4mm) (2)
6893G	**Bearing adapter, 6061-T6 aluminum (green-anodized) (1)/ 10x15x4mm ball bearing (black rubber sealed) (1) (for slipper shaft)**
6893X	**Bearing adapter, 6160-T6 aluminum (blue-anodized) (1)/10x15x4mm ball bearing (blue rubber sealed) (1) (for slipper shaft)**
7477	Cover, gear/ wire retainer
6814	**Differential kit, center (complete)**
6888	Drive hub, center, rear (1)/ 4x3 GS (1)
6855	**Driveshaft, center, 6061-T6 aluminum (blue-anodized)**
6855G	**Driveshaft, center, 6061-T6 aluminum (green-anodized)**
6855R	**Driveshaft, center, 6061-T6 aluminum (red-anodized)**
7455	Driveshaft, center, plastic (black)/ screw pin
6766	Gear clutch, complete (high stall)
6883	**Gear set, center differential (output gears (2)/ spider gears (2)/ spider gear shaft)**
5148	Grease, white lithium
6884	**Housing, center differential/ x-ring gaskets (2)/ ring gear gasket/ bushings (2)/ 5x10x0.5 TW (2)/ CCS 2.5x8 (4)**
6893	Input shaft (slipper shaft)/ bearing adapter (1)/pin (1)
7490	Plate, motor
7490G	**Plate, motor, green**
5352R	**Rebuild kit (heavy duty), slipper clutch (steel disc/ aluminum friction pads (3)/ spring (1)/ 2x9.8mm pin/ 5x8mm MW/ 5.0mm NL (1)/ 4.0mm NL (1))**
5352X	**Rebuild kit, slipper clutch (steel disc/ friction pads (3)/ spring (2)/ 2x9.8mm pin/ 5x8mm MW/ 5.0mm NL (1)/ 4.0mm NL (1))**
5552X	**Rebuild kit, slipper clutch (steel disc/ friction pads (3)/ spring (2)/ pin/ 4.0mm NL (1)/ 5.0mm NL (1))**
2575	Screws, 3x6mm button-head machine (hex drive) (6)
2554	Screws, 3x6mm cap-head machine (hex drive) (6)
3932	Screws, 3x6mm flat-head machine (hex drive) (6)
1647	Silicone grease
6878	**Slipper clutch, complete**
5556	**Slipper pressure plate & hub (aluminum alloy)**
5351	**Slipper pressure plate and hub (alloy)**

Chassis & Attachments

7426	Battery hold-down (1)/ hold-down retainer, front & rear (1 each)
7426X	**Battery hold-downs, tall (2) (allows for installation of taller, multi-cell batteries)**
7434	Body bumper, foam (low profile) (use with #7435 front skidplate)
7424	Box, receiver (sealed)/ foam pads/ 2.5x12mm CS (2)/ 3x6mm CS (2)/ 3x12mm BCS (2)
7422	Chassis
7423	Nerf bars, chassis (2)
7425	Seal kit, receiver box (includes o-ring, seals, and silicone grease)
7435	Skidplate, front (angled for higher ground clearance) (use with #7434 foam body bumper)

Differential Components

5119	Ball bearings, blue rubber sealed (10x15x4mm) (2)
5117	Ball bearings, blue rubber sealed (6x12x4mm) (2)
5118	Ball bearings, blue rubber sealed (8x16x5mm) (2)
5381	Carrier, differential/ x-ring gaskets (2)/ ring gear gasket/ 6x10x0.5 TW
6814	**Differential kit, center (complete)**
5136X	**Differential oil kit (1 each: 10K, 30K, 50K weights)**
6882X	Gear set, differential (output gears (2)/ spider gears (2)/ spider gear shaft, carrier support)
6881	Housings, differential, front
6880	Housings, differential, rear
5379X	Ring gear, differential/ pinion gear, differential
5379R	**Ring gear, differential/ pinion gear, differential (machined, spiral cut) (front)**
6879R	**Ring gear, differential/ pinion gear, differential (machined, spiral cut) (rear)**
6879	Ring gear, differential/ pinion gear, differential (rear)
3965	Screws, 2.5x8mm cap-head machine (6)
1647	Silicone grease

Driveline Components

5119A	Ball bearings, black rubber sealed (10x15x4mm) (2)
5119	Ball bearings, blue rubber sealed (10x15x4mm) (2)
5116	Ball bearings, blue rubber sealed (5x11x4mm) (2)
6828X	Differential output yokes, heavy duty (2)/ screw pin (2)
6760	Driveshaft assembly, front, heavy duty (1) (left or right) (fully assembled, ready to install)/ screw pin (1)
6761	Driveshaft assembly, rear, heavy duty (1) (left or right) (fully assembled, ready to install)/ screw pin (1)
6759	Half shafts, heavy duty (external splined (2)/ internal splined (2))/ metal u-joints (4)
6854X	Stub axles, front, heavy duty (2)/ yokes (2)/ pins (4)
6853X	Stub axles, rear, heavy duty (2)/pins (2)
1654	Wheel hubs, hex (2)/ stub axle pins (2)
1654X	**Wheel hubs, hex (blue-anodized, lightweight aluminum) (2)/ axle pins(4)**

Front Suspension & Steering

2728	Ball bearings (5x8x2.5mm) (2)
2545	Bellcrank bushings (plastic) (5x8x2.5mm) (4)
6823	Bulkhead tie bars, front & rear, aluminum (blue-anodized)
6823G	**Bulkhead tie bars, front & rear, aluminum (green-anodized)**
6823R	**Bulkhead tie bars, front & rear, aluminum (red-anodized)**
7430X	Bulkhead, front
6743	Camber link set (plastic/ non-adjustable) (front &rear)
6832X	**Caster blocks (c-hubs), 6061-T6 aluminum (blue-anodized), left & right**
6832G	**Caster blocks (c-hubs), 6061-T6 aluminum (green-anodized), left & right**
6832A	**Caster blocks (c-hubs), 6061-T6 aluminum (orange-anodized), left & right**
6832R	**Caster blocks (c-hubs), 6061-T6 aluminum (red-anodized), left & right**
6832	Caster blocks (c-hubs), left & right
6895	**Linkage, front sway bar (2) (assembled with rod ends, hollow balls and ball studs)**
6897	**Linkage, rear sway bar (2) (assembled with rod ends, hollow balls and ball studs)**
7438	Linkage, steering
2742	Rod ends, long (6)/ hollow ball connectors (6)
3646	Screws, 3x15mm flat-head machine (hex drive) (6)
5529	Shim set, 3x7x1mm (2), 3x6x0.5mm (4), 3x7x2mm (2)/ hollow balls, captured (4)

6839 Shock tower, front
6839X Shock tower, front, 7075-T6 aluminum (blue-anodized)
6845X Steering bellcranks/ servo saver/ servo saver spring/ servo spring retainer/servo horn, steering
6837X Steering blocks, 6061-T6 aluminum (blue-anodized), left & right
6837G Steering blocks, 6061-T6 aluminum (green-anodized), left & right
6837A Steering blocks, 6061-T6 aluminum (orange-anodized), left & right
6837R Steering blocks, 6061-T6 aluminum (red-anodized), left & right
6837 Steering blocks, left & right
6854X Stub axles, front, heavy duty (2)/ yokes (2)/ pins (4)
6731 Suspension arms, front/rear (left & right) (2)
6834 Suspension pin set, complete (front and rear)
6898 Sway bar kit (front and rear) (includes front and rear sway bars and adjustable linkage)
3139 Turnbuckles (62mm) (front tie rods) (2)
3139A Turnbuckles, aluminum (blue-anodized), toe links, 59mm (2) (assembled w/ rod ends & hollow balls) (requires 5mm aluminum wrench #5477)
3139X Turnbuckles, aluminum (red-anodized), toe links, 59mm (2) (assembled with rod ends & hollow balls) (requires 5mm aluminum wrench #5477)
6896 Wires, sway bar (front & rear, hard & soft) / 3x6 FCS (4)

Hardware

1926 Antenna caps, vinyl (2)/ antenna spool
1726 Antenna, tube (1)/ vinyl antenna cap (1)/ wire retainer (1)
1552 Screws, 3x8mm cap-head machine (hex drive) (6)/washers (6)/ wrench
3935 Body clip (mounting clip), angled, 90-degrees (10)
3935A Body clip (mounting clip), angled, 90-degrees (black) (10)
3934 Body clips, heavy duty (12)
1589 Double-sided adhesive tape (25mm x 25mm) (2)
2586 Screws, 3x15mm cap-head machine (hex drive) (6)
2745 Nuts, 3mm nylon locking (12)
3647 Nuts, 4mm flanged nylon locking (steel, serrated) (8)
1747 Nuts, 4mm nylon locking (10)
1747A Nuts, aluminum, flanged, serrated (4mm) (red-anodized) (4)
1985 PTFE-coated washers, 5x8x0.5mm (20) (use with ball bearings)
2742 Rod ends, long (6)/ hollow ball connectors (6)
2742X Rod ends, short (6)/ hollow balls (6)
3347 Screws, 2.5x5mm button-head machine (hex drive) (6)
3215 Screws, 2.5x6mm cap-head machine (hex drive) (6)
3965 Screws, 2.5x8mm cap-head machine (6)
2577 Screws, 3x10mm button-head machine (hex drive) (6)
2578 Screws, 3x12mm button-head machine (hex drive) (6)
2552 Screws, 3x12mm countersunk machine (6) (hex drive)
2579 Screws, 3x15mm button-head machine (hex drive) (6)
3646 Screws, 3x15mm flat-head machine (hex drive) (6)
2583 Screws, 3x18mm button-head machine (hex drive) (6)
2580 Screws, 3x20mm button-head machine (hex drive) (6)
2591 Screws, 3x23mm button-head machine (hex drive) (6)
2582 Screws, 3x30mm button-head machine (hex drive) (6)
2592 Screws, 3x40mm button-head machine (hex drive) (6)
2575 Screws, 3x6mm button-head machine (hex drive) (6)
2534 Screws, 3x6mm countersunk machine (6) (hex drive)
3932 Screws, 3x6mm flat-head machine (hex drive) (6)
2576 Screws, 3x8mm button-head machine (hex drive) (6)
3931 Screws, 3x8mm flat-head machine (hex drive) (6)
3936 Screws, 4x10mm button-head machine (hex drive) (6)
3937 Screws, 4x12mm button-head machine (hex drive) (6)
2542 Screws, 4x12mm countersunk machine (hex drive) (6)
3938 Screws, 4x14mm button-head machine (hex drive) (6)
2546 Screws, 4x15mm countersunk machine (hex drive) (6)
2743 Set (grub) screws, 3mm hardened (12)
3642X Shoulder screws, Ultra Shocks (3x12 hex drive) (6)
2754 Stub axle pins (4)
2748X Tool Set (1.5mm &2.5mm allens/ 4-way lug, 8mm &4mm wrench & U-joint wrenches)
2746 Washers, 3x6mm metal (12)

Motors & Electronics

1726 Antenna, tube (1)/ vinyl antenna cap (1)/ wire retainer (1)
2260 BEC assembly (complete)
3340 Cooling fan, Velineon® VXL-3s ESC
2252 Gear set, metal (for 2250, 2255 servos)
3354R Motor cover, endbell (Velineon® 3500)
7460A Motor mount (assembled with 3x6 flat-head machine screw)/ 3.0mm NL (1)
7460R Motor mount, 6061-T6 aluminum (blue-anodized)
3785 Motor, Titan® 12T (12-Turn, 550 size)
3351R Motor, Velineon® 3500, brushless (assembled with 12-gauge wire and gold-plated bullet connectors)
7490 Plate, motor
7490G Plate, motor, green
3347 Screws, 2.5x5mm button-head machine (hex drive) (6)
3932 Screws, 3x6mm flat-head machine (hex drive) (6)
2254 Servo case, aluminum (blue-anodized) (middle) (for 2250 servo)
2253 Servo case, aluminum (red-anodized) (middle) (for 2255 servo)
2251 Servo case, plastic (top, middle, bottom)/ gaskets/ hardware (for 2250, 2255 servos)
2074 Servo case/gaskets (for 2056 and 2075 waterproof servos)
2053 Servo gears (for 2055, 2056 servos)
2250 Servo, digital high-torque 330 coreless, metal gear (ball bearing), waterproof
2255 Servo, digital high-torque 400 brushless, metal gear (ball bearing), waterproof
2056 Servo, high-torque, waterproof (blue case)
3350R Velineon® VXL-3s Brushless Power System, waterproof (includes VXL-3s waterproof ESC, Velineon 3500 motor, and speed control mounting plate (part #3725R))
3355R Velineon® VXL-3s Electronic Speed Control, waterproof (brushless) (fwd/rev/brake)
3018R XL-5 Electronic Speed Control, waterproof (land version, low-voltage detection, fwd/rev/brake)

Radio System, Batteries & Chargers

2842X 5000mAh 7.4v 2-Cell 25C LiPo Battery
2843X 5800mAh 7.4v 2-Cell 25C LiPo Battery
2869X 7600mAh 7.4v 2-Cell 25C LiPo Battery
2976 AC to DC converter, 40W
2938X Adapter, Traxxas® iD® LiPo battery (adapts Traxxas iD batteries to separate balance ports)
2943 Battery charge indicators (green (4), blue (4), grey (4))
6548 Battery door, transmitter (replacement for #6516, 6517, 6528, 6529, 6530 transmitters)
2914 Battery, Power Cell AA Alkaline (4)
2923X Battery, Power Cell, 3000mAh (NiMH, 7-C flat, 8.4V)
2926X Battery, Power Cell, 3000mAh (NiMH, 7-C hump, 8.4V)
2940X Battery, Series 3 Power Cell, 3300mAh (NiMH, 7-C flat, 8.4V)
2941X Battery, Series 3 Power Cell, 3300mAh (NiMH, 7-C hump, 8.4V)
2950X Battery, Series 4 Power Cell, 4200mAh (NiMH, 7-C flat, 8.4V)
2951X Battery, Series 4 Power Cell, 4200mAh (NiMH, 7-C hump, 8.4V)
2960X Battery, Series 5 Power Cell, 5000mAh (NiMH, 7-C flat, 8.4V)
2961X Battery, Series 5 Power Cell, 5000mAh (NiMH, 7-C hump, 8.4V)
2983 Battery/charger completer pack (includes #2969 2-amp NiMH peak detecting AC charger (1), #2923X 3000mAh 8.4V 7-cell NiMH battery (1))
2992 Battery/charger completer pack (includes #2970 iD® charger (1), #2843X 5800mAh 7.4V 2-cell 25C LiPo battery (1))
2260 BEC assembly (complete)
2927R Charger, AC, 500 mAh (7 cell, NiMH) (US only)
2975 Charger, DC, 4 amp (6 - 7 cell, 7.2 - 8.4 volt, NiMH)
2972 Charger, EZ-Peak® Dual, 100W, NiMH/LiPo with iD® Auto Battery Identification
2973 Charger, EZ-Peak® Live Dual, 200W, NiMH/LiPo with iD® Auto Battery Identification
2971 Charger, EZ-Peak® Live, 100W, NiMH/LiPo with iD® Auto Battery Identification
2970 Charger, EZ-Peak® Plus, 4 amp, NiMH/LiPo with iD® Auto Battery Identification
6525 Communication link, telemetry expander
6541 Connector, power tap (with cable) (long)/ wire tie
6512 Cover plate, Traxxas Link™ Wireless Module
2978 Fuse, charger, 5A (2) (for #2974, 2975, 2977)
2252 Gear set, metal (for 2250, 2255 servos)
2968X LiPo cell voltage checker/balancer (includes #2938X adapter for Traxxas® iD® batteries)
2968 LiPo cell voltage checker/balancer (requires #2938X adapter for Traxxas® iD® batteries)
6555 Mount, telemetry expander (fits Slash 4X4, Stampede® 4X4, Rally, Jato®)
6535 Mount, temperature sensor (electric motors)/ wire tie/ thermal pad
6519 Receiver, micro, TQ 2.4GHz (3-channel)
6533 Receiver, micro, TQi 2.4GHz with telemetry & TSM (5-channel)
6518 Receiver, micro, TQi 2.4GHz with telemetry (5-channel)
3932 Screws, 3x6mm flat-head machine (hex drive) (6)
6552 Seal kit, expander box (includes o-ring, seals, and silicone grease)
6526 Sensor, auto-detectable, temperature
6527 Sensor, auto-detectable, voltage
6520 Sensor, RPM (long)/ 3x4mm BCS (2)/ 3x4 GS (1)
6521 Sensor, temperature and voltage (long)

FIESTA ST RALLY (74054-4)

2254	**Servo case, aluminum (blue-anodized) (middle) (for 2250 servo)**
2253	**Servo case, aluminum (red-anodized) (middle) (for 2255 servo)**
2251	**Servo case, plastic (top, middle, bottom)/ gaskets/ hardware (for 2250, 2255 servos)**
2074	Servo case/gaskets (for 2056 and 2075 waterproof servos)
2053	Servo gears (for 2055, 2056 servos)
2250	**Servo, digital high-torque 330 coreless, metal gear (ball bearing), waterproof**
2255	**Servo, digital high-torque 400 brushless, metal gear (ball bearing), waterproof**
2056	Servo, high-torque, waterproof (blue case)
6553X	**Telemetry expander 2.0 and GPS module 2.0, TQi radio system**
6550X	**Telemetry expander 2.0, TQi radio system (for use only with #6551X GPS module)**
6551X	**Telemetry GPS module 2.0, TQi radio system (for use only with #6550X telemetry expander)**
6539	**Telemetry trigger magnet holder, center differential/ magnet, 5x2mm (1)/ 3x8mm BCS (3)**
6538	**Telemetry trigger magnet holders, spur gear/ magnet, 5x2mm (1)/ 3x8mm CCS (3)/ 3x10mm CCS (3)**
6540	**Telemetry trigger magnet, 5X2mm (1)**
2928	**Temperature sensor, EZ-Peak Plus**
6509R	**TQi 2.4 GHz High Output radio system, 2-channel, Traxxas Link™ enabled, TSM (2-ch transmitter, 5-ch micro receiver)**
6507R	**TQi 2.4 GHz High Output radio system, 4-channel with Traxxas Link™ Wireless Module, TSM (4-ch transmitter, 5-ch micro receiver)**
6516	Transmitter, TQ 2.4GHz, 2-channel (transmitter only)
6528	**Transmitter, TQi Traxxas Link™ enabled, 2.4GHz high output, 2-channel (transmitter only)**
6529	**Transmitter, TQi Traxxas Link™ enabled, 2.4GHz high output, 3-channel (transmitter only)**
6530	**Transmitter, TQi Traxxas Link™ enabled, 2.4GHz high output, 4-channel (transmitter only)**
6511	**Traxxas Link™ Wireless Module**

Ready-To-Race Model

74054-4	Ford Fiesta® ST Rally: 1/10 Scale Electric Rally Racer with TQ 2.4GHz radio system

Rear Suspension

6823	Bulkhead tie bars, front & rear, aluminum (blue-anodized)
6823G	**Bulkhead tie bars, front & rear, aluminum (green-anodized)**
6823R	**Bulkhead tie bars, front & rear, aluminum (red-anodized)**
7429	Bulkhead, rear
2441A	Camber link set for Bandit (grey) (plastic/ non-adjustable)
1952X	**Carriers, stub axle (blue-anodized 6061-T6 aluminum) (rear) (2)**
1952G	**Carriers, stub axle (green-anodized 6061-T6 aluminum) (rear) (2)**
1952T	**Carriers, stub axle (orange-anodized 6061-T6 aluminum) (rear) (2)**
1952	Carriers, stub axle (rear) (2)
1952A	**Carriers, stub axle (red-anodized 6061-T6 aluminum) (rear) (2)**
6895	**Linkage, front sway bar (2) (assembled with rod ends, hollow balls and ball studs)**
6897	**Linkage, rear sway bar (2) (assembled with rod ends, hollow balls and ball studs)**
2742	Rod ends, long (6)/ hollow ball connectors (6)
5529	Shim set, 3x7x1mm (2), 3x6x0.5mm (4), 3x7x2mm (2)/ hollow balls, captured (4)
6838	Shock tower, rear
6838X	**Shock tower, rear, 7075-T6 aluminum (blue-anodized)**
6853X	Stub axles, rear, heavy duty (2)/pins (2)
6731	Suspension arms, front/rear (left & right) (2)
6834	Suspension pin set, complete (front and rear)
6898	**Sway bar kit (front and rear) (includes front and rear sway bars and adjustable linkage)**
3139	Turnbuckles (62mm) (front tie rods) (2)
6896	**Wires, sway bar (front & rear, hard & soft) / 3x6 FCS (4)**

Shocks (Pro-level Aluminum)

2664	**Big Bore shock cylinder (long) (1)**
2666	**Big Bore shock cylinder (XX-long) (1)**
5862	**Big Bore shocks (hard-anodized & PTFE-coated T6 aluminum) (assembled with TiN shafts and springs) (front & rear) (4)**
2660	**Big Bore shocks (long) (hard-anodized & PTFE-coated T6 aluminum) (assembled with TiN shafts) w/o springs (front) (2)**
2662	**Big Bore shocks (XX-long) (hard-anodized & PTFE-coated T6 aluminum) (assembled with TiN shafts) w/o springs (rear) (2)**
2669	**Piston head set (2-hole (2)/ 3-hole (2))/ shock mounting bushings & washers (2) (Big Bore Shocks)**
2362	**Rebuild kit, Ultra shocks (for 2 shocks)**
1942	Rod ends (16 long & 4 short)/ hollow ball connectors (18)/ ball screws (2)
2742X	Rod ends, short (6)/ hollow balls (6)
2667	**Shock caps, aluminum (Big Bore Shocks) (2)**
1664T	**Shock shafts, hardened steel, titanium nitride coated (long) (2)**
2656T	**Shock shafts, hardened steel, titanium nitride coated (xx-long) (2)**
1664	Shock shafts, steel, chrome finish (long) (2)
2656	Shock shafts, steel, chrome finish (xx-long) (2)
1765	Silicone diaphragms (4)
1666	Silicone shock oil (30 wt)
2668	**Spring retainers, upper & lower (2)/ spring pre-load spacers: 1mm (4)/ 1.5mm (2)/ 2mm (2)/ 4mm (2)/ 8mm (2) (Big Bore Shocks)**
6863	**Springs, front (progressive, +10% rate, pink) (2)**
6864	**Springs, front (progressive, +20% rate, blue) (2)**
6862	**Springs, front (progressive, -10% rate, green) (2)**
6861	**Springs, front (progressive, -20% rate, orange) (2)**
7458	Springs, front (white) (progressive rate) (2)
6867	**Springs, rear (progressive, +10% rate, pink) (2)**
6868	**Springs, rear (progressive, +20% rate, blue) (2)**
6866	**Springs, rear (progressive, -10% rate, green) (2)**
6865	**Springs, rear (progressive, -20% rate, orange) (2)**
7457	Springs, rear (white) (progressive rate) (2)

Shocks (Ultra Shocks)

3642	Attachment screws, shock (3x12mm shoulder screws) (6)
3765A	Body, Ultra Shock(s) (long) (grey) (2)
3766A	Body, Ultra Shock(s) (XXL) (grey) (2)
2362	Rebuild kit, Ultra shocks (for 2 shocks)
1942	Rod ends (16 long & 4 short)/ hollow ball connectors (18)/ ball screws (2)
2742X	Rod ends, short (6)/ hollow balls (6)
3767	Shock caps (2)/ shock bottoms (2)
3767A	**Shock caps, aluminum (blue-anodized) (4) (fits all Ultra Shocks)**
3767G	**Shock caps, aluminum (green-anodized) (4) (fits all Ultra Shocks)**
3767P	**Shock caps, aluminum (pink-anodized) (4) (fits all Ultra Shocks)**
3767X	**Shock caps, aluminum (red-anodized) (4) (fits all Ultra Shocks)**
1664T	**Shock shafts, hardened steel, titanium nitride coated (long) (2)**
2656T	**Shock shafts, hardened steel, titanium nitride coated (xx-long) (2)**
1664	Shock shafts, steel, chrome finish (long) (2)
2656	Shock shafts, steel, chrome finish (xx-long) (2)
1765	Silicone diaphragms (4)
1666	Silicone shock oil (30 wt)
3769	Spring pre-load spacers: 1mm (4)/ 2mm (2)/ 4mm (2)/ 8mm (2)
3768	Spring retainers, upper & lower (2)/ piston head set (2-hole (2)/ 3-hole (2))
6863	**Springs, front (progressive, +10% rate, pink) (2)**
6864	**Springs, front (progressive, +20% rate, blue) (2)**
6862	**Springs, front (progressive, -10% rate, green) (2)**
6861	**Springs, front (progressive, -20% rate, orange) (2)**
7458	Springs, front (white) (progressive rate) (2)
6867	**Springs, rear (progressive, +10% rate, pink) (2)**
6868	**Springs, rear (progressive, +20% rate, blue) (2)**
6866	**Springs, rear (progressive, -10% rate, green) (2)**
6865	**Springs, rear (progressive, -20% rate, orange) (2)**
7457	Springs, rear (white) (progressive rate) (2)
3760	**Ultra Shocks (black) (long) (complete w/ spring pre-load spacers & springs) (front) (2)**
3762	**Ultra Shocks (black) (xx-long) (complete w/ spring pre-load spacers & springs) (rear) (2)**
3760A	Ultra Shocks (grey) (long) (complete w/ spring pre-load spacers & springs) (2)
3762A	Ultra Shocks (grey) (xx-long) (complete w/ spring pre-load spacers & springs) (rear) (2)

Slipper Clutch Components

1552	Backplate screws (3x8mm cap-head machine) (6)/washers (6)/ wrench
6893G	**Bearing adapter, 6061-T6 aluminum (green-anodized) (1)/ 10x15x4mm ball bearing (black rubber sealed) (1) (for slipper shaft)**
6893X	**Bearing adapter, 6160-T6 aluminum (blue-anodized) (1)/10x15x4mm ball bearing (blue rubber sealed) (1) (for slipper shaft)**
6814	**Differential kit, center (complete)**
6888	Drive hub, center, rear (1)/ 4x3 GS (1)
6888X	Drive hub, front, hardened steel (1)/ screw pin (1)
6766	Gear clutch, complete (high stall)
6883	**Gear set, center differential (output gears (2)/ spider gears (2)/ spider gear shaft)**
6884	**Housing, center differential/ x-ring gaskets (2)/ ring gear gasket/ bushings (2)/ 5x10x0.5 TW (2)/ CCS 2.5x8 (4)**
6893	Input shaft (slipper shaft)/ bearing adapter (1)/pin (1)

REV. 201002 1241

5352R	**Rebuild kit (heavy duty), slipper clutch (steel disc/ aluminum friction pads (3)/ spring (1)/ 2x9.8mm pin/ 5x8mm MW/ 5.0mm NL (1)/ 4.0mm NL (1))**
5352X	**Rebuild kit, slipper clutch (steel disc/ friction pads (3)/ spring (2)/ 2x9.8mm pin/ 5x8mm MW/ 5.0mm NL (1)/ 4.0mm NL (1))**
5552X	**Rebuild kit, slipper clutch (steel disc/ friction pads (3)/ spring (2)/ pin/ 4.0mm NL (1)/ 5.0mm NL (1))**
6878	**Slipper clutch, complete**
5556	**Slipper pressure plate & hub (aluminum alloy)**
5351	**Slipper pressure plate and hub (alloy)**

Spur Gears & Pinion Gears

7477	Cover, gear/ wire retainer
2428	Gear, 12-T pinion (48-pitch)/ set screw
2416	**Gear, 16-T pinion (48-pitch) / set screw**
1918	**Gear, 18-T pinion (48-pitch) / set screw**
2419	**Gear, 19-T pinion (48-pitch) / set screw**
2423	**Gear, 23-T pinion (48-pitch) / set screw**
2426	**Gear, 26-T pinion (48-pitch)/set screw**
2431	**Gear, 31-T pinion (48-pitch) / set screw**
4725	**Gear, pinion (25-tooth) (48-pitch) / set screw**
4728	**Gear, pinion (28-tooth) (48-pitch)/ set screw**
2676	Screws, 3x12mm roundhead self-tapping (6)
4676	**Spur gear, 76-tooth (48-pitch) (for models with Torque-Control slipper clutch)**
4683	Spur gear, 83-tooth (48-pitch) (for models with Torque-Control slipper clutch)

Steering Components

1552	Screws, 3x8mm cap-head machine (hex drive) (6)/washers (6)/ wrench
2728	**Ball bearings (5x8x2.5mm) (2)**
2545	Bellcrank bushings (plastic) (5x8x2.5mm) (4)
7438	Linkage, steering
2742	Rod ends, long (6)/ hollow ball connectors (6)
6845X	Steering bellcranks/ servo saver/ servo saver spring/ servo spring retainer/servo horn, steering
2746	Washers, 3x6mm metal (12)

Suspension Linkage

6743	Camber link set (plastic/ non-adjustable) (front &rear)
2441A	Camber link set for Bandit (grey) (plastic/ non-adjustable)
6834	Suspension pin set, complete (front and rear)

Team Traxxas Items

2514	**Decal sheet, racing sponsors**
6160X	**DVD, Maxx® Power! Full Throttle Action (sleeve)**
9950	**Official Team Traxxas® racing decal set (flag logo/ 6-color)**
9909	**Traxxas® racing banner, red & black (3x7 feet)**

Tires & Wheels

5116	Ball bearings, blue rubber sealed (5x11x4mm) (2)
5854	**Hub retainer, 17mm hubs, M4 X 0.7 (4) (use with #5853X, #6856X, #6469)**
3647	Nuts, 4mm flanged nylon locking (steel, serrated) (8)
1985	PTFE-coated washers, 5x8x0.5mm (20) (use with ball bearings)
1647	Silicone grease
2754	Stub axle pins (4)
7473T	Tires & wheels, assembled, glued (black wheels, gravel pattern tires, foam inserts) (2) (TSM® rated)
7473X	**Tires & wheels, assembled, glued (green wheels, gravel pattern tires, foam inserts) (2) (TSM® rated)**
7473A	**Tires & wheels, assembled, glued (orange wheels, gravel pattern tires, foam inserts) (2) (TSM® rated)**
7473	**Tires & wheels, assembled, glued (white wheels, gravel pattern tires, foam inserts) (2) (TSM® rated)**
7473R	**Tires & wheels, assembled, glued (white wheels, gravel pattern, S1 compound tires, foam inserts) (2)**
7471	**Tires, BFGoodrich® Rally, gravel pattern (2)/ foam inserts (2)**
7471R	**Tires, BFGoodrich® Rally, gravel pattern, S1 compound (2)/ foam inserts (2)**
1654	Wheel hubs, hex (rear) (2)/ stub axle pins (2)
1654X	**Wheel hubs, hex (blue-anodized, lightweight aluminum) (2)/ axle pins(4)**
6856X	**Wheel hubs, splined, 17mm, short (4)/ wheel nuts, splined, 17mm (4) (blue-anodized)/ hub retainer M4 X 0.7 (4)/ axle pin (4)/ wrench, 5mm**
5353	**Wheel nuts, splined, 17mm (blue-anodized) (4)**
5480X	**Wheel wrench, splined, 17mm**
7472X	**Wheels, green (2)**
7472A	**Wheels, orange (2)**
7472	**Wheels, white (2)**

Traxxas Tools

3433X	**Body reamer (aluminum handle)**
3433	**Body reamer (plastic handle)**
3436	**Cap, body reamer**
3432	**Scissors, curved tip**
3431	**Scissors, straight tip**
8712	**Speed Bit Essentials Set, hex and nut driver, 7-piece, includes premium handle (medium), travel pouch, hex drivers (straight: 1.5mm, 2.0mm, 2.5mm) and nut drivers (5.0mm, 5.5mm, 7.0mm, and 8.0mm), 1/4" drive**
8721	**Speed bit handle, medium (one piece)**
8720	**Speed bit handle, premium, large (rubber overmold)**
8722	**Speed bit handle, premium, medium (rubber overmold)**
8710	**Speed Bit Master Set, hex and nut driver, 13-piece, includes premium handle (medium), travel pouch, hex drivers (straight: 1.5mm, 2.0mm, 2.5mm, 3.0mm), (ball-end: 2.0mm, 2.5mm, 3.0mm), and nut drivers (4.00mm, 4.50mm, 5.00mm, 5.50mm, 7.00mm, 8.00mm),**
8711	**Speed Bit Master Set, hex driver, 7-piece straight and ball end, includes premium handle (medium), travel pouch, hex drivers (straight: 1.5mm, 2.0mm, 2.5mm, 3.0mm) (ball end: 2.0mm, 2.5mm, 3.0mm), 1/4" drive**
8719	**Speed Bit Master Set, nut driver, 6-piece, includes premium handle (medium), travel pouch, and nut drivers (4.0mm, 4.5mm, 5.0mm, 5.5mm, 7.0mm, 8.0mm), 1/4" drive**
8716	**Speed Bit Set, hex driver, 2-piece ball-end (2.0mm, 2.5mm), 1/4" drive**
8716X	**Speed Bit Set, hex driver, 3-piece ball-end (2.0mm, 2.5mm, 3.0mm), 1/4" drive**
8715	**Speed Bit Set, hex driver, 3-piece straight (1.5mm, 2.0mm, 2.5mm), 1/4" drive**
8715X	**Speed Bit Set, hex driver, 4-piece straight (1.5mm, 2.0mm, 2.5mm, 3.0mm), 1/4" drive**
3415	**Tool set with pouch (includes 1.5mm, 2.0mm, 2.5mm, 3.0mm, 3.5mm, 4mm drivers/ 4mm, 5mm, 5.5mm, 7mm and 8mm nut drivers/ 2mm, 4mm, and 5mm slotted screwdrivers/ #00 Phillips, #0 Phillips, and #1 Phillips screwdrivers/ 4mm and 8mm wrench/ driver handle**

Turnbuckles & Threaded Rods

6743	Camber link set (plastic/ non-adjustable) (front &rear)
2441A	Camber link set for Bandit (grey) (plastic/ non-adjustable)
2742	Rod ends, long (6)/ hollow ball connectors (6)
5529	Shim set, 3x7x1mm (2), 3x6x0.5mm (4), 3x7x2mm (2)/ hollow balls, captured (4)
3139	Turnbuckles (62mm) (front tie rods) (2)
3139A	**Turnbuckles, aluminum (blue-anodized), toe links, 59mm (2) (assembled w/ rod ends & hollow balls) (requires 5mm aluminum wrench #5477)**
3139X	**Turnbuckles, aluminum (red-anodized), toe links, 59mm (2) (assembled with rod ends & hollow balls) (requires 5mm aluminum wrench #5477)**

If you have questions or need technical assistance, call Traxxas at:

1-888-TRAXXAS

(1-888-872-9927) (U.S. residents only)

For orders, calls outside the U.S., and other information, call 972-549-3000, or fax to 972-549-3011 e-mail Traxxas at support@Traxxas.com

TRAXXAS.com

STAMPEDE 4X4

UNASSEMBLED KIT

MODEL 67014-4

1/10 SCALE 4WD
MONSTER TRUCK KIT



TITAN 12T MOTOR

WATERPROOF XL-5 ESC

TQ 2.4GHz TRANSMITTER

HIGH-PERFORMANCE MONSTER TRUCK!

The Stampede 4X4 Assembly Kit combines all the mud-slinging fun of the RTR Stampede with the excitement of building your own truck. Build the Stampede from the ground up with all the required parts and electronics included in the box. You'll get the convenience of a TQ™ 2.4GHz radio system, powerful Titan® electric motor, and waterproof XL-5 electronic speed control. All the parts are organized neatly in labeled bags with a fully illustrated color manual to make building rewarding and fun. The Stampede 4X4 Kit is perfect for drivers of almost any age or skill level.

*With 6S LiPo battery and optional gearing

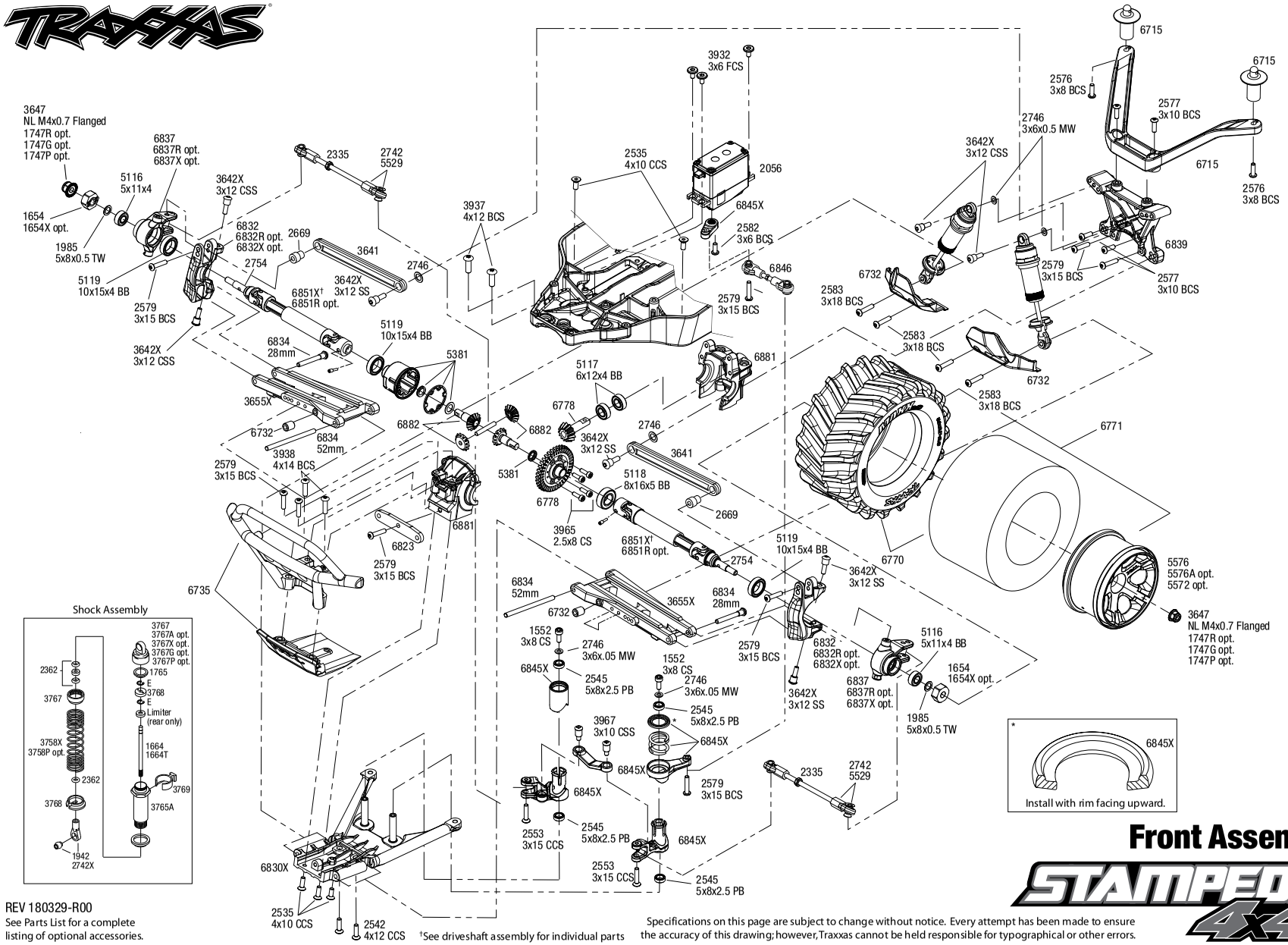

REV 180329-R00

See Parts List for a complete listing of optional accessories.

†See driveshaft assembly for individual parts

Specifications on this page are subject to change without notice. Every attempt has been made to ensure the accuracy of this drawing; however, Traxxas cannot be held responsible for typographical or other errors.

Front Assembly

STAMPEDE 4X4

STAMPEDE KIT (67014-4)

Chassis Assembly

REV 180329-R00

See Parts List for a complete listing of optional accessories.

Specifications on this page are subject to change without notice. Every attempt has been made to ensure the accuracy of this drawing; however, Traxxas cannot be held responsible for typographical or other errors.

STAMPEDE 4X4

Rear Assembly

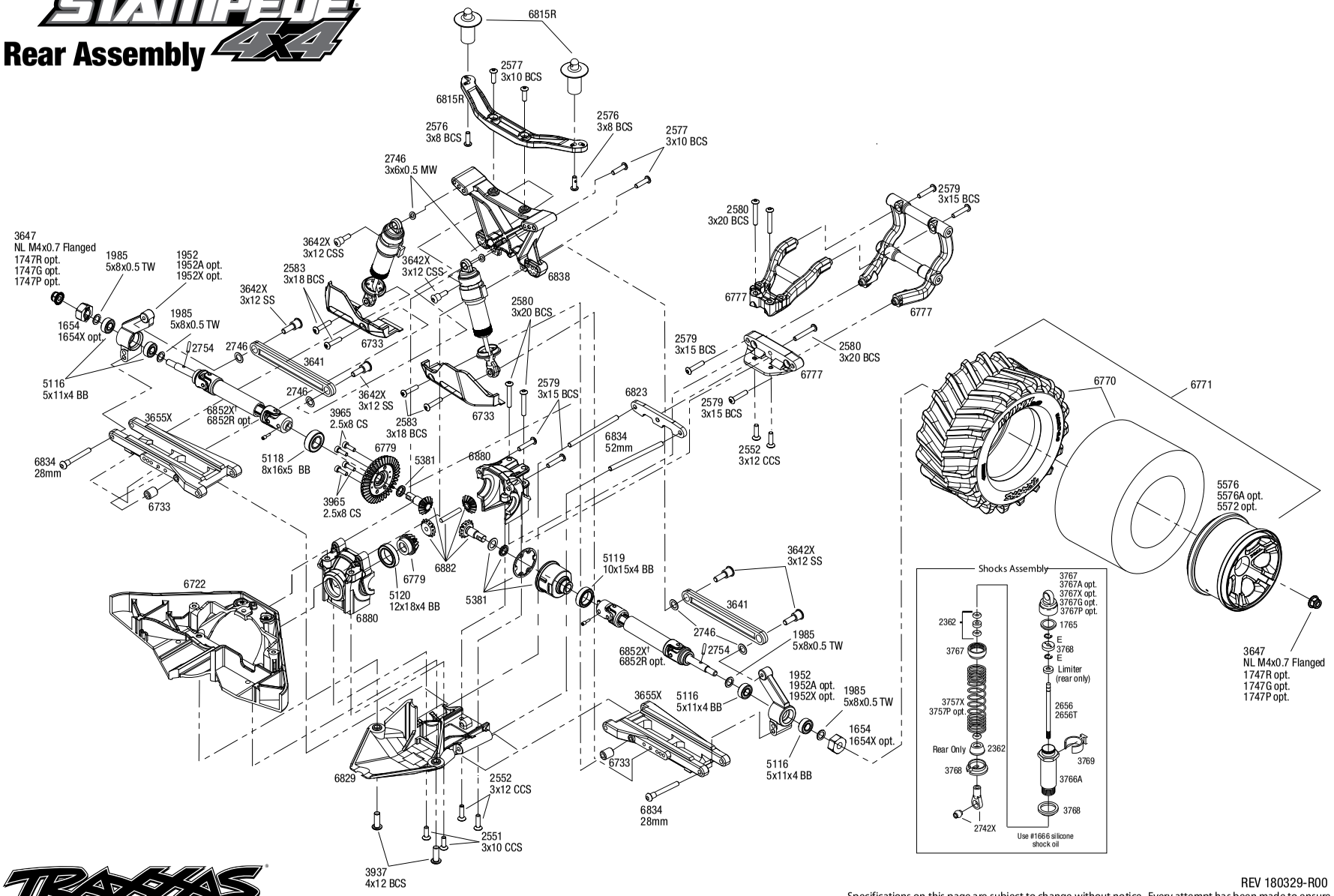

See Parts List for a complete listing of optional accessories.

REV 180329-R00

Specifications on this page are subject to change without notice. Every attempt has been made to ensure the accuracy of this drawing; however, Traxxas cannot be held responsible for typographical or other errors.

STAMPEDE 4X4

Center Driveline Assembly

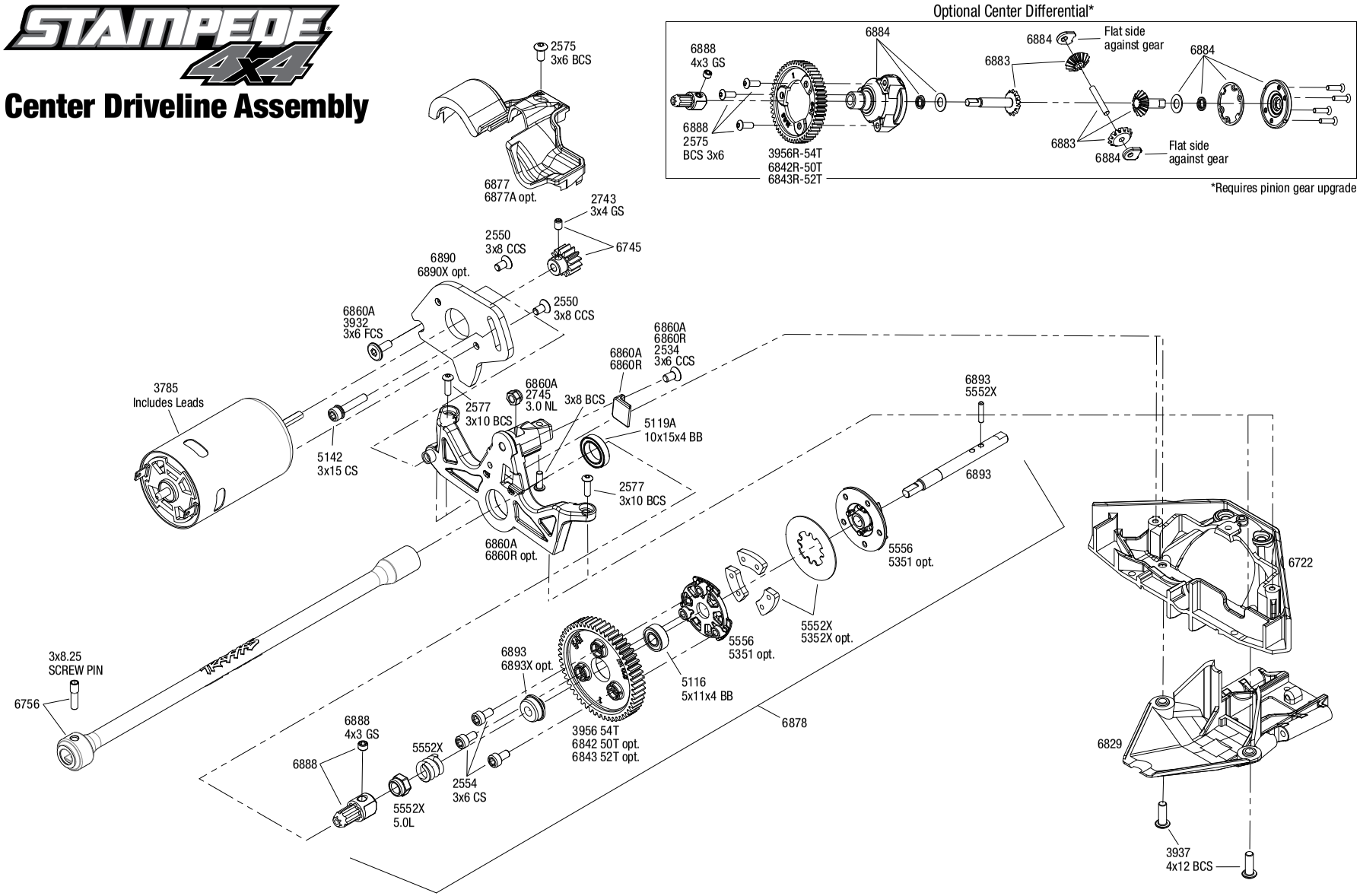

See Parts List for a complete listing of optional accessories.

REV 180329-R00

Specifications on this page are subject to change without notice. Every attempt has been made to ensure the accuracy of this drawing; however, Traxxas cannot be held responsible for typographical or other errors.

Driveshaft Assembly

Rear Driveshaft Assembly
Available fully assembled as part #6852X

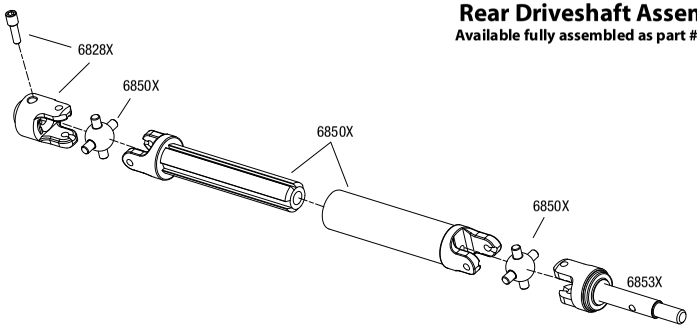

Front Driveshaft Assembly
Available fully assembled as part #6851X

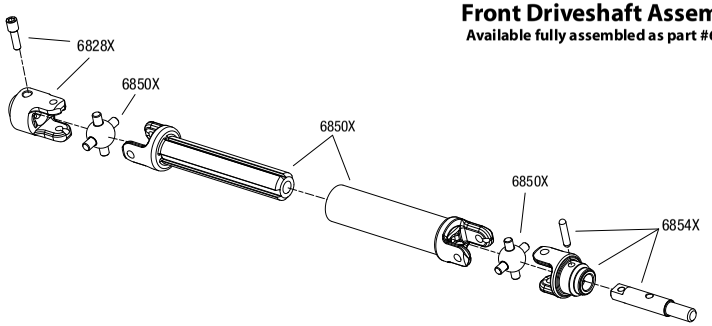

Modular Assembly

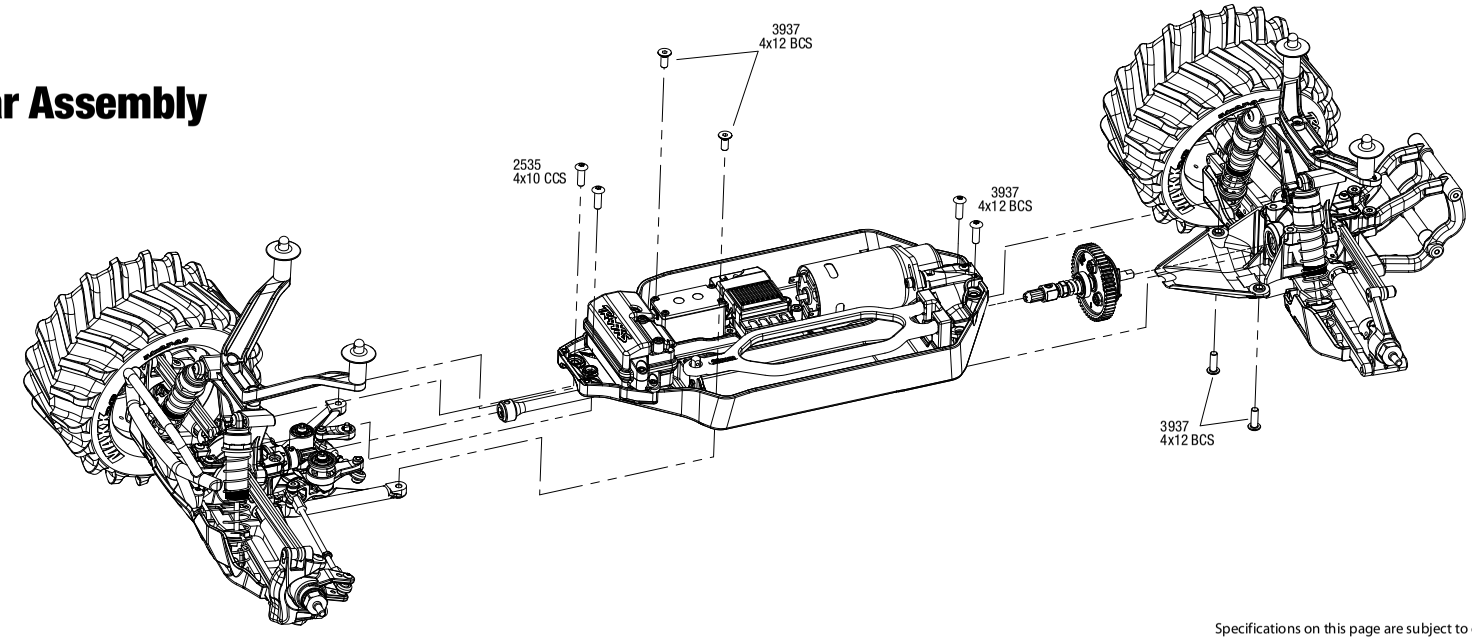

REV 180329-R00
Specifications on this page are subject to change without notice.
Every attempt has been made to ensure the accuracy of this drawing; however, Traxxas cannot
be held responsible for typographical or other errors. See Parts List for a complete listing of optional accessories.

STAMPEDE KIT (67014-4)

PARTS SHOWN IN BOLD ARE OPTIONAL ACCESSORIES.

Part categories and individual part listings are arranged alphabetically.

Bearings & Bushings

4607	**Ball bearings (5x11x4mm) (8)**
4612	**Ball bearings (10x15x4mm) (2)**
2728	**Ball bearings (5x8x2.5mm) (2)**
5119	Ball bearings, blue rubber sealed (10x15x4mm) (2)
5120	Ball bearings, blue rubber sealed (12x18x4mm) (2)
5116	Ball bearings, blue rubber sealed (5x11x4mm) (2)
5114	**Ball bearings, blue rubber sealed (5x8x2.5mm) (2)**
5117	Ball bearings, blue rubber sealed (6x12x4mm) (2)
5118	Ball bearings, blue rubber sealed (8x16x5mm) (2)
2545	Bellcrank bushings (plastic) (5x8x2.5mm) (4)
1985	PTFE-coated washers, 5x8x0.5mm (20) (use with ball bearings)

Body & Accessories

1926	Antenna caps, vinyl (2)/ antenna spool
1726	Antenna, tube (1)/ vinyl antenna cap (1)/ wire retainer (1)
3935	Body clip (mounting clip), angled, 90-degrees (10)
3935A	**Body clip (mounting clip), angled, 90-degrees (black) (10)**
3934	Body clips, heavy duty (12)
1815	Body washers (8)
6716	**Body washers, foam, 2mm (2)/ 3mm (2)/ 4mm (4)**
3617	Body, Stampede® (clear, requires painting) (requires #3614 to mount)
6711X	**Body, Stampede® 4X4 VXL, ProGraphix® (Graphics are printed, requires paint & final color application)/ decal sheet**
6714	**Body, Stampede® 4X4, ProGraphix® (Graphics are printed, requires paint & final color application)/ decal sheet**
2514	**Decal sheet, racing sponsors**
9950	**Official Team Traxxas® racing decal set (flag logo/ 6-color)**
5185	**Tires, rubber (2) (fits Traxxas® wheelie bar wheels)**
4974	**Wheelie bar arm (1)/ connector (1)/ 3x12 SS (hex drive) (4)**
6777	Wheelie bar mounts/ rear skidplate (black)
4976	**Wheels (4)/ axles (2) (for T-Maxx®/E-Maxx wheelie bar)**
5186A	**Wheels, aluminum (blue-anodized) (2)/ 5x8mm ball bearings (4)/ axles (2)/ rubber tires (2)**
5186	**Wheels, aluminum (red-anodized) (2)/ 5x8mm ball bearings (4)/ axles (2)/ rubber tires (2)**

Center Driveline

5119A	Ball bearings, black rubber sealed (10x15x4mm) (2)
5120	Ball bearings, blue rubber sealed (12x18x4mm) (2)
5116	Ball bearings, blue rubber sealed (5x11x4mm) (2)
5117	Ball bearings, blue rubber sealed (6x12x4mm) (2)
6893G	**Bearing adapter, 6061-T6 aluminum (green-anodized) (1)/ 10x15x4mm ball bearing (black rubber sealed) (1) (for slipper shaft)**
6893X	**Bearing adapter, 6160-T6 aluminum (blue-anodized) (1)/10x15x4mm ball bearing (blue rubber sealed) (1) (for slipper shaft)**
6741	Cover, center driveshaft (clear)
6877A	**Cover, gear (clear)**
6877	Cover, gear/ motor wire hold-down clip
6814	**Differential kit, center (complete)**
6888	Drive hub, center, rear (1)/ 4x3 GS (1)
6888X	**Drive hub, front, hardened steel (1)/ screw pin (1)**
6755	**Driveshaft, center, 6061-T6 aluminum (blue-anodized)**
6755G	**Driveshaft, center, 6061-T6 aluminum (green-anodized)**
6755R	**Driveshaft, center, 6061-T6 aluminum (red-anodized)**
6756	Driveshaft, center, plastic (blue)/ screw pin
6883	**Gear set, center differential (output gears (2)/ spider gears (2)/ spider gear shaft)**
5148	Grease, white lithium
6884	**Housing, center differential/ x-ring gaskets (2)/ ring gear gasket/ bushings (2)/ 5x10x0.5 TW (2)/ CCS 2.5x8 (4)**
6893	Input shaft (slipper shaft)/ bearing adapter (1)/pin (1)
6890	Plate, motor
6890X	**Plate, motor, 6061-T6 aluminum (blue-anodized)**
5352R	**Rebuild kit (heavy duty), slipper clutch (steel disc/ aluminum friction pads (3)/ spring (1)/ 2x9.8mm pin/ 5x8mm MW/ 5.0mm NL (1)/ 4.0mm NL (1))**
5352X	**Rebuild kit, slipper clutch (steel disc/ friction pads (3)/ spring (2)/ 2x9.8mm pin/ 5x8mm MW/ 5.0mm NL (1)/ 4.0mm NL (1))**
5552X	**Rebuild kit, slipper clutch (steel disc/ friction pads (3)/ spring (2)/ pin/ 4.0mm NL (1)/ 5.0mm NL (1))**
2575	Screws, 3x6mm button-head machine (hex drive) (6)
2554	Screws, 3x6mm cap-head machine (hex drive) (6)
3932	Screws, 3x6mm flat-head machine (hex drive) (6)
1647	Silicone grease
6878	Slipper clutch, complete
5556	Slipper pressure plate & hub (aluminum alloy)
5351	**Slipper pressure plate and hub (alloy)**

Chassis & Attachments

6715	Body mount (1)/ body mount post (2) (front)
6815R	Body mount (1)/ body mount post (2)/ body post extensions (2) (front or rear)
3628	Box, receiver (sealed)/ foam pad/2.5x8mm CS (4)/ 3x10mm CS (2)
6735	Bumper, front/ skidplate, front (black)
6722	Chassis
6727	Hold down, battery (2)/ hold down retainer/ battery post/ angled body clip
6727X	**Hold down, battery/ hold down retainer/ battery post/ angled body clip (allows for installation of taller, multi-cell batteries)**
3629	Seal kit, receiver box (includes o-ring, seals, and silicone grease)
5185	**Tires, rubber (2) (fits Traxxas® wheelie bar wheels)**
4974	**Wheelie bar arm (1)/ connector (1)/ 3x12 SS (hex drive) (4)**
6777	Wheelie bar mounts/ rear skidplate (black)
4976	**Wheels (4)/ axles (2) (for T-Maxx®/E-Maxx wheelie bar)**
5186A	**Wheels, aluminum (blue-anodized) (2)/ 5x8mm ball bearings (4)/ axles (2)/ rubber tires (2)**
5186	**Wheels, aluminum (red-anodized) (2)/ 5x8mm ball bearings (4)/ axles (2)/ rubber tires (2)**

Differential Components

5119	Ball bearings, blue rubber sealed (10x15x4mm) (2)
5117	Ball bearings, blue rubber sealed (6x12x4mm) (2)
5118	Ball bearings, blue rubber sealed (8x16x5mm) (2)
5381	Carrier, differential/ x-ring gaskets (2)/ ring gear gasket/ 6x10x0.5 TW
6814	**Differential kit, center (complete)**
6882X	Gear set, differential (output gears (2)/ spider gears (2)/ spider gear shaft, carrier support)
6881	Housings, differential, front
6880	Housings, differential, rear
5379X	**Ring gear, differential/ pinion gear, differential**
6778	Ring gear, differential/ pinion gear, differential (12/47 ratio) (front)
6779	Ring gear, differential/ pinion gear, differential (12/47 ratio) (rear)
5379R	**Ring gear, differential/ pinion gear, differential (machined, spiral cut) (front)**
6879R	**Ring gear, differential/ pinion gear, differential (machined, spiral cut) (rear)**
6879	**Ring gear, differential/ pinion gear, differential (rear)**
3965	Screws, 2.5x8mm cap-head machine (6)
1647	Silicone grease

Driveline Components

6455	**Axle carriers, rear, 6061-T6 aluminum, left & right (blue-anodized) (Compatible only when installing #6451 & #6452 steel constant-velocity driveshafts)**
5119	Ball bearings, blue rubber sealed (10x15x4mm) (2)
5116	Ball bearings, blue rubber sealed (5x11x4mm) (2)
5117	**Ball bearings, blue rubber sealed (6x12x4mm) (2) (Compatible only when installing #6451 & #6452 steel constant-velocity driveshafts)**
9059X	**Cross pin (2)/ drive pin (2) (repairs 2 axle shafts)**
9057X	**Differential output shafts, steel-splined constant-velocity (2)**
6828X	Differential output yokes, heavy duty (2)/ screw pin (2)
6851X	Driveshaft assembly, front, heavy duty (1) (left or right) (fully assembled, ready to install)/ screw pin (1)
6852X	Driveshaft assembly, rear, heavy duty (1) (left or right) (fully assembled, ready to install)/ screw pin (1)
6851R	**Driveshafts, front, steel-spline constant-velocity (complete assembly) (2)**
9051X	**Driveshafts, front, steel-spline constant-velocity (complete assembly) (2)**
6852R	**Driveshafts, rear, steel-spline constant-velocity (complete assembly) (2)**
9052X	**Driveshafts, rear, steel-spline constant-velocity (complete assembly) (2)**
9055X	**Half shaft, external splined (steel-spline constant velocity) (1)**
6750	**Half shaft, external splined (steel-spline constant-velocity) (1)**
9056X	**Half shaft, internal splined (steel-spline constant velocity) (1)**
6751	**Half shaft, internal splined (steel-spline constant-velocity) (1)**
6850X	Half shafts, heavy duty (external splined (2)/ internal splined (2))/ metal u-joints (4)
6757	**Rebuild kit, steel-splined constant-velocity driveshafts (includes pins, dustboots, lube, and hardware)**

9058X **Rebuild kit, steel-splined constant-velocity driveshafts (includes pins, lube, and hardware for two axle shafts)**
6439 **Steering blocks, 6061-T6 aluminum, left & right (blue-anodized) (Compatible only when installing #6451 & #6452 steel constant-velocity driveshafts)**
6754 **Stub axle, front, 5mm (steel-splined constant-velocity driveshaft) (1)**
9054X **Stub axle, front, steel-splined constant velocity (1)**
6753 **Stub axle, rear, 5mm (steel-splined constant-velocity driveshaft) (1)**
9053X **Stub axle, rear, steel-splined constant velocity (1)**
6854X Stub axles, front, heavy duty (2)/ yokes (2)/ pins (4)
6853X Stub axles, rear, heavy duty (2)/pins (2)
6869 **Wheel adaptors, 12mm hex, 6061-T6 aluminum (blue-anodized) (4)/ screw pins (4)/ drill bit, 0.25 inch (for 6mm shafts) (requires #6451 (x2), #6452 (x2), #6439, #6455, #5117 (x3))**
1654X **Wheel hubs, hex (blue-anodized, lightweight aluminum) (2)/ axle pins(4)**

Front Suspension & Steering

5114 **Ball bearings, blue rubber sealed (5x8x2.5mm) (2)**
2545 Bellcrank bushings (plastic) (5x8x2.5mm) (4)
6823 Bulkhead tie bars, front & rear, aluminum (blue-anodized)
6823G **Bulkhead tie bars, front & rear, aluminum (green-anodized)**
6823R **Bulkhead tie bars, front & rear, aluminum (red-anodized)**
3641A Camber link set (plastic / non-adjustable) (front & rear) (grey)
3641 **Camber link set (plastic/ non-adjustable) (front & rear) (black)**
3643X **Camber links, front (TUBES blue-anodized, 7075-T6 aluminum, stronger than titanium) (83mm) (2)/ rod ends (4)/ aluminum wrench (1) (#2579 3x15 BCS (4) required for installation)**
3643G **Camber links, front (TUBES green-anodized, 7075-T6 aluminum, stronger than titanium) (83mm) (2)/ rod ends (4)/ aluminum wrench (1) (#2579 3x15 BCS (4) required for installation)**
3643R **Camber links, front (TUBES red-anodized, 7075-T6 aluminum, stronger than titanium) (83mm) (2)/ rod ends (4)/ aluminum wrench (1) (#2579 3x15 BCS (4) required for installation)**
6832X **Caster blocks (c-hubs), 6061-T6 aluminum (blue-anodized), left & right**
6832G **Caster blocks (c-hubs), 6061-T6 aluminum (green-anodized), left & right**
6832A **Caster blocks (c-hubs), 6061-T6 aluminum (orange-anodized), left & right**
6832R **Caster blocks (c-hubs), 6061-T6 aluminum (red-anodized), left & right**
6832 Caster blocks (c-hubs), left & right
6845A **Drag link, machined 6061-T6 aluminum (blue-anodized)**
6845G **Drag link, machined 6061-T6 aluminum (green-anodized)**
6845T **Drag link, machined 6061-T6 aluminum (orange-anodized)**
6845R **Drag link, machined 6061-T6 aluminum (red-anodized)**
6895 **Linkage, front sway bar (2) (assembled with rod ends, hollow balls and ball studs)**
6897 **Linkage, rear sway bar (2) (assembled with rod ends, hollow balls and ball studs)**
6846 **Linkage, steering (3x20mm turnbuckle) (1)/ rod ends (2)/ hollow balls (2)**
2669 Piston head set (2-hole (2)/ 3-hole (2))/ shock mounting bushings & washers (2) (Big Bore Shocks)
2742 Rod ends, long (6)/ hollow ball connectors (6)
3646 Screws, 3x15mm flat-head machine (hex drive) (6)
5529 Shim set, 3x7x1mm (2), 3x6x0.5mm (4), 3x7x2mm (2)/ hollow balls, captured (4)
6839 Shock tower, front
6839X **Shock tower, front, 7075-T6 aluminum (blue-anodized)**
6845X Steering bellcranks/ servo saver/ servo saver spring/ servo spring retainer/servo horn, steering
6837X **Steering blocks, 6061-T6 aluminum (blue-anodized), left & right**
6837G **Steering blocks, 6061-T6 aluminum (green-anodized), left & right**
6837A **Steering blocks, 6061-T6 aluminum (orange-anodized), left & right**
6837R **Steering blocks, 6061-T6 aluminum (red-anodized), left & right**
6837 Steering blocks, left & right
6854X Stub axles, front, heavy duty (2)/ yokes (2)/ pins (4)
6732 Suspension arm guards, front (2)/ guard spacers (2)/ hollow balls (2)/ 3X16mm BCS (8)
3655P **Suspension arms, blue, front/rear (left & right), heavy duty (2)**
3655R **Suspension arms, front/rear (left & right), heavy duty (2)**
3655G **Suspension arms, green, front/rear (left & right), heavy duty (2)**
3655X Suspension arms, left & right
3655T **Suspension arms, orange, front/rear (left & right), heavy duty (2)**
3655L **Suspension arms, red, front/rear (left & right), heavy duty (2)**
3655A **Suspension arms, white, front/rear (left & right), heavy duty (2)**
6834 Suspension pin set, complete (front and rear)
6898 **Sway bar kit (front and rear) (includes front and rear sway bars and adjustable linkage)**
3643 **Turnbuckles, camber link, 49mm (82mm center to center) (assembled with rod ends and hollow balls) (1 left, 1 right)**
5539 **Turnbuckles, camber links, 58mm (assembled with rod ends and hollow balls) (2)**
6896 **Wires, sway bar (front & rear, hard & soft) / 3x6 FCS (4)**

Hardware

1926 Antenna caps, vinyl (2)/ antenna spool
1726 Antenna, tube (1)/ vinyl antenna cap (1)/ wire retainer (1)
3642 Attachment screws, shock (3x12mm shoulder screws) (6)
1552 Screws, 3x8mm cap-head machine (hex drive) (6)/washers (6)/ wrench
3935 Body clip (mounting clip), angled, 90-degrees (10)
3935A Body clip (mounting clip), angled, 90-degrees (black) (10)
3934 Body clips, heavy duty (12)
1589 Double-sided adhesive tape (25mm x 25mm) (2)
2586 Screws, 3x15mm cap-head machine (hex drive) (6)
2745 Nuts, 3mm nylon locking (12)
3647 Nuts, 4mm flanged nylon locking (steel, serrated) (8)
1747 **Nuts, 4mm nylon locking (10)**
1747R **Nuts, aluminum, flanged, serrated (4mm) (blue-anodized) (4)**
1747G **Nuts, aluminum, flanged, serrated (4mm) (green-anodized) (4)**
1747P **Nuts, aluminum, flanged, serrated (4mm) (pink-anodized) (4)**
1747A **Nuts, aluminum, flanged, serrated (4mm) (red-anodized) (4)**
1985 PTFE-coated washers, 5x8x0.5mm (20) (use with ball bearings)
5525 Rod ends (12)/ hollow balls (12)
2742X Rod ends, short (6)/ hollow balls (6)
3347 Screws, 2.5x5mm button-head machine (hex drive) (6)
3215 Screws, 2.5x6mm cap-head machine (hex drive) (6)
3965 Screws, 2.5x8mm cap-head machine (6)
2577 Screws, 3x10mm button-head machine (hex drive) (6)
2578 Screws, 3x12mm button-head machine (hex drive) (6)
2552 Screws, 3x12mm countersunk machine (6) (hex drive)
2579 Screws, 3x15mm button-head machine (hex drive) (6)
3646 Screws, 3x15mm flat-head machine (hex drive) (6)
2583 Screws, 3x18mm button-head machine (hex drive) (6)
2580 Screws, 3x20mm button-head machine (hex drive) (6)
2591 Screws, 3x23mm button-head machine (hex drive) (6)
2582 Screws, 3x30mm button-head machine (hex drive) (6)
2592 Screws, 3x40mm button-head machine (hex drive) (6)
2575 Screws, 3x6mm button-head machine (hex drive) (6)
2554 Screws, 3x6mm cap-head machine (hex drive) (6)
2534 Screws, 3x6mm countersunk machine (6) (hex drive)
3932 Screws, 3x6mm flat-head machine (hex drive) (6)
2576 Screws, 3x8mm button-head machine (hex drive) (6)
3931 Screws, 3x8mm flat-head machine (hex drive) (6)
3937 Screws, 4x12mm button-head machine (hex drive) (6)
2542 Screws, 4x12mm countersunk machine (hex drive) (6)
2546 Screws, 4x15mm countersunk machine (hex drive) (6)
2743 Set (grub) screws, 3mm hardened (12)
3642X Shoulder screws, Ultra Shocks (3x12 hex drive) (6)
2754 Stub axle pins (4)
2746 Washers, 3x6mm metal (12)

LED Lights

6784 **LED light bar (chrome, 4 clear lights)**

Motors & Electronics

1726 Antenna, tube (1)/ vinyl antenna cap (1)/ wire retainer (1)
2260 **BEC assembly (complete)**
2072A **Gear set (for 2070, 2075 servos)**
2072X **Gear set, metal (for 2070, 2075 servos)**
2252 **Gear set, metal (for 2250, 2255 servos)**
2072R **Gear set, metal, high speed (for 2070, 2075 servos)**
6860A Motor mount (assembled with 3x6 flat-head machine screw)/ 3.0mm NL (1)
6860R **Motor mount, 6061-T6 aluminum (blue-anodized)**
3785 Motor, Titan® 12T (12-Turn, 550 size)
3351R **Motor, Velineon® 3500, brushless (assembled with 12-gauge wire and gold-plated bullet connectors)**
3347 Screws, 2.5x5mm button-head machine (hex drive) (6)
3932 Screws, 3x6mm flat-head machine (hex drive) (6)
2254 **Servo case, aluminum (blue-anodized) (middle) (for 2250 servo)**
2253 **Servo case, aluminum (red-anodized) (middle) (for 2255 servo)**
2251 **Servo case, plastic (top, middle, bottom)/ gaskets/ hardware (for 2250, 2255 servos)**
2074 **Servo case/gaskets (for 2056 and 2075 waterproof servos)**
2053 **Servo gears (for 2055, 2056 servos)**
2075R **Servo, digital high-speed, metal gear (ball bearing), waterproof**
2075 **Servo, digital high-torque (ball bearing), waterproof**

STAMPEDE KIT (67014-4)

2250	**Servo, digital high-torque 330 coreless, metal gear (ball bearing), waterproof**
2255	**Servo, digital high-torque 400 brushless, metal gear (ball bearing), waterproof**
2075X	**Servo, digital high-torque, metal gear (ball bearing), waterproof**
2056	Servo, high-torque, waterproof (blue case)
3350R	**Velineon® VXL-3s Brushless Power System, waterproof (includes VXL-3s waterproof ESC, Velineon 3500 motor, and speed control mounting plate (part #3725R))**
3355R	**Velineon® VXL-3s Electronic Speed Control, waterproof (brushless) (fwd/rev/brake)**
3018R	XL-5 Electronic Speed Control, waterproof (land version, low-voltage detection, fwd/rev/brake)

Radio System, Batteries & Chargers

2842X	**5000mAh 7.4v 2-Cell 25C LiPo Battery**
2843X	**5800mAh 7.4v 2-Cell 25C LiPo Battery**
2976	**AC to DC converter, 40W**
2938X	**Adapter, Traxxas® iD® LiPo battery (adapts Traxxas iD batteries to separate balance ports)**
6548	Battery door, transmitter (replacement for #6516, 6517, 6528, 6529, 6530 transmitters)
2914	**Battery, Power Cell AA Alkaline (4)**
2926X	**Battery, Power Cell, 3000mAh (NiMH, 7-C hump, 8.4V)**
2941X	**Battery, Series 3 Power Cell, 3300mAh (NiMH, 7-C hump, 8.4V)**
2951X	**Battery, Series 4 Power Cell, 4200mAh (NiMH, 7-C hump, 8.4V)**
2961X	**Battery, Series 5 Power Cell, 5000mAh (NiMH, 7-C hump, 8.4V)**
2984	**Battery/charger completer pack (includes #2969 2-amp NiMH peak detecting AC charger (1), #2926X 3000mAh 8.4V 7-cell NiMH battery (1))**
2992	**Battery/charger completer pack (includes #2970 iD® charger (1), #2843X 5800mAh 7.4V 2-cell 25C LiPo battery (1))**
2260	**BEC assembly (complete)**
2975	**Charger, DC, 4 amp (6 - 7 cell, 7.2 - 8.4 volt, NiMH)**
2972	**Charger, EZ-Peak® Dual, 100W, NiMH/LiPo with iD® Auto Battery Identification**
2973	**Charger, EZ-Peak® Live Dual, 200W, NiMH/LiPo with iD® Auto Battery Identification**
2971	**Charger, EZ-Peak® Live, 100W, NiMH/LiPo with iD® Auto Battery Identification**
2970	**Charger, EZ-Peak® Plus, 4 amp, NiMH/LiPo with iD® Auto Battery Identification**
6525	**Communication link, telemetry expander**
6541	**Connector, power tap (with cable) (long)/ wire tie**
2978	**Fuse, charger, 5A (2) (for #2974, 2975, 2977)**
2072A	**Gear set (for 2070, 2075 servos)**
2072X	**Gear set, metal (for 2070, 2075 servos)**
2252	**Gear set, metal (for 2250, 2255 servos)**
2072R	**Gear set, metal, high speed (for 2070, 2075 servos)**
2968X	**LiPo cell voltage checker/balancer (includes #2938X adapter for Traxxas® iD® batteries)**
2968	**LiPo cell voltage checker/balancer (requires #2938X adapter for Traxxas® iD® batteries)**
6555	**Mount, telemetry expander (fits Slash 4X4, Stampede® 4X4, Rally, Jato®)**
6535	**Mount, temperature sensor (electric motors)/ wire tie/ thermal pad**
6519	Receiver, micro, TQ 2.4GHz (3-channel)
6518	**Receiver, micro, TQi 2.4GHz with telemetry (5-channel)**
3932	Screws, 3x6mm flat-head machine (hex drive) (6)
6552	**Seal kit, expander box (includes o-ring, seals, and silicone grease)**
6526	**Sensor, auto-detectable, temperature**
6527	**Sensor, auto-detectable, voltage**
6520	**Sensor, RPM (long)/ 3x4mm BCS (2)/ 3x4 GS (1)**
6521	**Sensor, temperature and voltage (long)**
2254	**Servo case, aluminum (blue-anodized) (middle) (for 2250 servo)**
2253	**Servo case, aluminum (red-anodized) (middle) (for 2255 servo)**
2251	**Servo case, plastic (top, middle, bottom)/ gaskets/ hardware (for 2250, 2255 servos)**
2074	**Servo case/gaskets (for 2056 and 2075 waterproof servos)**
2053	**Servo gears (for 2055, 2056 servos)**
2075R	**Servo, digital high-speed, metal gear (ball bearing), waterproof**
2075	**Servo, digital high-torque (ball bearing), waterproof**
2250	**Servo, digital high-torque 330 coreless, metal gear (ball bearing), waterproof**
2255	**Servo, digital high-torque 400 brushless, metal gear (ball bearing), waterproof**
2075X	**Servo, digital high-torque, metal gear (ball bearing), waterproof**
2056	**Servo, high-torque, waterproof (blue case)**
6553X	**Telemetry expander 2.0 and GPS module 2.0, TQi radio system**
6550X	**Telemetry expander 2.0, TQi radio system (for use only with #6551X GPS module)**
6551X	**Telemetry GPS module 2.0, TQi radio system (for use only with #6550X telemetry expander)**
6539	**Telemetry trigger magnet holder, center differential/ magnet, 5x2mm (1)/ 3x8mm BCS (3)**
6538	**Telemetry trigger magnet holders, spur gear/ magnet, 5x2mm (1)/ 3x8mm CCS (3)/ 3x10mm CCS (3)**
6540	**Telemetry trigger magnet, 5X2mm (1)**
6509R	**TQi 2.4 GHz High Output radio system, 2-channel, Traxxas Link™ enabled, TSM (2-ch transmitter, 5-ch micro receiver)**
6507R	**TQi 2.4 GHz High Output radio system, 4-channel with Traxxas Link™ Wireless Module, TSM (4-ch transmitter, 5-ch micro receiver)**
6516	Transmitter, TQ 2.4GHz, 2-channel (transmitter only)
6528	**Transmitter, TQi Traxxas Link™ enabled, 2.4GHz high output, 2-channel (transmitter only)**
6529	**Transmitter, TQi Traxxas Link™ enabled, 2.4GHz high output, 3-channel (transmitter only)**
6530	**Transmitter, TQi Traxxas Link™ enabled, 2.4GHz high output, 4-channel (transmitter only)**
6511	**Traxxas Link™ Wireless Module**

Rear Suspension

6823	Bulkhead tie bars, front & rear, aluminum (blue-anodized)
6823G	**Bulkhead tie bars, front & rear, aluminum (green-anodized)**
6823R	**Bulkhead tie bars, front & rear, aluminum (red-anodized)**
6829	Bulkhead, rear
3641A	Camber link set (plastic / non-adjustable) (front & rear) (grey)
3641	**Camber link set (plastic/ non-adjustable) (front & rear) (black)**
3644X	**Camber links, rear (TUBES blue-anodized, 7075-T6 aluminum, stronger than titanium) (73mm) (2)/ rod ends (4)/ aluminum wrench (1) (#2579 3x15 BCS (4) required for installation)**
3644G	**Camber links, rear (TUBES green-anodized 7075-T6 aluminum, stronger than titanium) (73mm) (2)/ rod ends (4)/ aluminum wrench (1) (#2579 3x15 BCS (4) required for installation)**
3644R	**Camber links, rear (TUBES red-anodized, 7075-T6 aluminum, stronger than titanium) (73mm) (2)/ rod ends (4)/ aluminum wrench (1) (#2579 3x15 BCS (4) required for installation)**
1952X	**Carriers, stub axle (blue-anodized 6061-T6 aluminum) (rear) (2)**
1952G	**Carriers, stub axle (green-anodized 6061-T6 aluminum) (rear) (2)**
1952T	**Carriers, stub axle (orange-anodized 6061-T6 aluminum) (rear) (2)**
1952	Carriers, stub axle (rear) (2)
1952A	**Carriers, stub axle (red-anodized 6061-T6 aluminum) (rear) (2)**
6895	**Linkage, front sway bar (2) (assembled with rod ends, hollow balls and ball studs)**
6897	**Linkage, rear sway bar (2) (assembled with rod ends, hollow balls and ball studs)**
5529	Shim set, 3x7x1mm (2), 3x6x0.5mm (4), 3x7x2mm (2)/ hollow balls, captured (4)
6838	Shock tower, rear
6838X	**Shock tower, rear, 7075-T6 aluminum (blue-anodized)**
6853X	Stub axles, rear, heavy duty (2)/pins (2)
6732	Suspension arm guards, front (2)/ guard spacers (2)/ hollow balls (2)/ 3X16mm BCS (8)
3655P	**Suspension arms, blue, front/rear (left & right), heavy duty (2)**
3655R	**Suspension arms, front/rear (left & right), heavy duty (2)**
3655G	**Suspension arms, green, front/rear (left & right), heavy duty (2)**
3655X	Suspension arms, left & right
3655T	**Suspension arms, orange, front/rear (left & right), heavy duty (2)**
3655L	**Suspension arms, red, front/rear (left & right), heavy duty (2)**
3655A	**Suspension arms, white, front/rear (left & right), heavy duty (2)**
6834	Suspension pin set, complete (front and rear)
6898	**Sway bar kit (front and rear) (includes front and rear sway bars and adjustable linkage)**
3644	**Turnbuckles, camber link, 39mm (69mm center to center) (assembled with rod ends and hollow balls) (1 left, 1 right)**
6896	**Wires, sway bar (front & rear, hard & soft) / 3x6 FCS (4)**

Shocks (GTR)

7466X	**Body, GTR long (hard-anodized, PTFE-coated aluminum) (1)**
7466	**Body, GTR long shock, aluminum (blue-anodized) (PTFE-coated bodies) (1)**
7466G	**Body, GTR long shock, aluminum (green-anodized) (PTFE-coated bodies) (1)**
7466A	**Body, GTR long shock, aluminum (orange-anodized) (PTFE-coated bodies) (1)**
7467X	**Body, GTR xx-long (hard-anodized, PTFE-coated aluminum) (1)**
7467	**Body, GTR xx-long shock, aluminum (blue-anodized) (PTFE-coated bodies) (1)**
7467G	**Body, GTR xx-long shock, aluminum (green-anodized) (PTFE-coated bodies) (1)**
7467A	**Body, GTR xx-long shock, aluminum (orange-anodized) (PTFE-coated bodies) (1)**

REV. 201002 1237

7468X Caps & spring retainers, GTR shock (upper cap (2)/ hollow balls (4)/ bottom cap (2)/ upper retainer (2)/ lower retainer (2))
7468 Caps and spring retainers, GTR long/xx-long shock (upper cap (2)/ hollow balls (4)/ bottom cap (2)/ upper retainer (2)/ lower retainer (2))
5475 Multi-tool (plastic)
5158 Nuts, 2.5mm nylon locking (12)
7463 Rebuild kit, GTR long/xx-long shocks (x-rings, bladders, pistons, piston nuts, shock rod ends, hollow balls) (renews 2 shocks)
5469 Rod ends (GTR shocks) (6)
7464T Shaft, GTR long, TiN-coated (2)
7461 Shocks, GTR long blue-anodized, PTFE-coated bodies with TiN shafts (fully assembled, without springs) (2)
7461G Shocks, GTR long green-anodized, PTFE-coated bodies with TiN shafts (fully assembled, without springs) (2)
7461X Shocks, GTR long hard-anodized, PTFE-coated bodies with TiN shafts (assembled) (2) (without springs)
7462 Shocks, GTR xx-long blue-anodized, PTFE-coated bodies with TiN shafts (fully assembled, without springs) (2)
7462G Shocks, GTR xx-long green-anodized, PTFE-coated bodies with TiN shafts (fully assembled, without springs) (2)
7462X Shocks, GTR xx-long hard-anodized, PTFE-coated bodies with TiN shafts (assembled) (2) (without springs)
8459 Spring retainers, lower (captured) (4)/ 2.5x10 CS (4)
7440 Spring, shock, white (GTR long) (0.623 rate orange) (1 pair)
7441 Spring, shock, white (GTR long) (0.653 rate green) (1 pair)
7444 Spring, shock, white (GTR long) (0.767 rate black) (1 pair)
7445 Spring, shock, white (GTR long) (0.810 rate pink) (1 pair)
7448 Spring, shock, white (GTR long) (0.892 rate blue) (1 pair)
7442 Spring, shock, white (GTR xx-long) (0.711 rate orange) (1 pair)
7443 Spring, shock, white (GTR xx-long) (0.762 rate green) (1 pair)
7446 Spring, shock, white (GTR xx-long) (0.874 rate black) (1 pair)
7447 Spring, shock, white (GTR xx-long) (0.884 rate pink) (1 pair)
7449 Spring, shock, white (GTR xx-long) (1.004 rate blue) (1 pair)

Shocks (Pro-level Aluminum)

2664 Big Bore shock cylinder (long) (1)
2666 Big Bore shock cylinder (XX-long) (1)
5862 Big Bore shocks (hard-anodized & PTFE-coated T6 aluminum) (assembled with TiN shafts and springs) (front & rear) (4)
2660 Big Bore shocks (long) (hard-anodized & PTFE-coated T6 aluminum) (assembled with TiN shafts) w/o springs (front) (2)
2662 Big Bore shocks (XX-long) (hard-anodized & PTFE-coated T6 aluminum) (assembled with TiN shafts) w/o springs (rear) (2)
2669 Piston head set (2-hole (2)/ 3-hole (2))/ shock mounting bushings & washers (2) (Big Bore Shocks)
2362 Rebuild kit, Ultra shocks (for 2 shocks)
1942 Rod ends (16 long & 4 short)/ hollow ball connectors (18)/ ball screws (2)
2742X Rod ends, short (6)/ hollow balls (6)
2667 Shock caps, aluminum (Big Bore Shocks) (2)
1664T Shock shafts, hardened steel, titanium nitride coated (long) (2)
2656T Shock shafts, hardened steel, titanium nitride coated (xx-long) (2)
1664 Shock shafts, steel, chrome finish (long) (2)
2656 Shock shafts, steel, chrome finish (xx-long) (2)
1765 Silicone diaphragms (4)
1666 Silicone shock oil (30 wt)
2668 Spring retainers, upper & lower (2)/ spring pre-load spacers: 1mm (4)/ 1.5mm (2)/ 2mm (2)/ 4mm (2)/ 8mm (2) (Big Bore Shocks)
6863 Springs, front (progressive, +10% rate, pink) (2)
6864 Springs, front (progressive, +20% rate, blue) (2)
6862 Springs, front (progressive, -10% rate, green) (2)
6861 Springs, front (progressive, -20% rate, orange) (2)
6857 Springs, front (white) (progressive rate) (2)
5860 Springs, front (white) (progressive rate) (2) (fits #5862 aluminum Big Bore shocks)
6867 Springs, rear (progressive, +10% rate, pink) (2)
6868 Springs, rear (progressive, +20% rate, blue) (2)
6866 Springs, rear (progressive, -10% rate, green) (2)
6865 Springs, rear (progressive, -20% rate, orange) (2)
6858 Springs, rear (white) (progressive rate) (2)
5859 Springs, rear (white) (progressive rate) (2) (fits #5862 aluminum Big Bore shocks)

Shocks (Ultra Shocks)

3642 Attachment screws, shock (3x12mm shoulder screws) (6)
3765A Body, Ultra Shock(s) (long) (grey) (2)
3766A Body, Ultra Shock(s) (XXL) (grey) (2)
2362 Rebuild kit, Ultra shocks (for 2 shocks)
1942 Rod ends (16 long & 4 short)/ hollow ball connectors (18)/ ball screws (2)
2742X Rod ends, short (6)/ hollow balls (6)
3767 Shock caps (2)/ shock bottoms (2)
3767A Shock caps, aluminum (blue-anodized) (4) (fits all Ultra Shocks)
3767G Shock caps, aluminum (green-anodized) (4) (fits all Ultra Shocks)
3767P Shock caps, aluminum (pink-anodized) (4) (fits all Ultra Shocks)
3767X Shock caps, aluminum (red-anodized) (4) (fits all Ultra Shocks)
1664T Shock shafts, hardened steel, titanium nitride coated (long) (2)
2656T Shock shafts, hardened steel, titanium nitride coated (xx-long) (2)
1664 Shock shafts, steel, chrome finish (long) (2)
2656 Shock shafts, steel, chrome finish (xx-long) (2)
1765 Silicone diaphragms (4)
1666 Silicone shock oil (30 wt)
3769 Spring pre-load spacers: 1mm (4)/ 2mm (2)/ 4mm (2)/ 8mm (2)
3768 Spring retainers, upper & lower (2)/ piston head set (2-hole (2)/ 3-hole (2))
3758 Springs, front (black) (2)
3758T Springs, front (blue) (2)
3758A Springs, front (green) (2)
3758P Springs, front (pink) (2)
6863 Springs, front (progressive, +10% rate, pink) (2)
6864 Springs, front (progressive, +20% rate, blue) (2)
6862 Springs, front (progressive, -10% rate, green) (2)
6861 Springs, front (progressive, -20% rate, orange) (2)
3758X Springs, front (white) (2)
6857 Springs, front (white) (progressive rate) (2)
3757 Springs, rear (black) (2)
3757T Springs, rear (blue) (2)
3757A Springs, rear (green) (2)
3757P Springs, rear (pink) (2)
6867 Springs, rear (progressive, +10% rate, pink) (2)
6868 Springs, rear (progressive, +20% rate, blue) (2)
6866 Springs, rear (progressive, -10% rate, green) (2)
6865 Springs, rear (progressive, -20% rate, orange) (2)
3757X Springs, rear (white) (2)
6858 Springs, rear (white) (progressive rate) (2)
4957 Springs, red (for Ultra Shocks only) (2.5 rate) (f/r) (2)
3760 Ultra Shocks (black) (long) (complete w/ spring pre-load spacers & springs) (front) (2)
3762 Ultra Shocks (black) (xx-long) (complete w/ spring pre-load spacers & springs) (rear) (2)
3760A Ultra Shocks (grey) (long) (complete w/ spring pre-load spacers & springs) (2)
3762A Ultra Shocks (grey) (xx-long) (complete w/ spring pre-load spacers & springs) (rear) (2)

Slipper Clutch Components

6893G Bearing adapter, 6061-T6 aluminum (green-anodized) (1)/ 10x15x4mm ball bearing (black rubber sealed) (1) (for slipper shaft)
6893X Bearing adapter, 6160-T6 aluminum (blue-anodized) (1)/10x15x4mm ball bearing (blue rubber sealed) (1) (for slipper shaft)
6814 Differential kit, center (complete)
6888 Drive hub, center, rear (1)/ 4x3 GS (1)
6888X Drive hub, front, hardened steel (1)/ screw pin (1)
6883 Gear set, center differential (output gears (2)/ spider gears (2)/ spider gear shaft)
6884 Housing, center differential/ x-ring gaskets (2)/ ring gear gasket/ bushings (2)/ 5x10x0.5 TW (2)/ CCS 2.5x8 (4)
6893 Input shaft (slipper shaft)/ bearing adapter (1)/pin (1)
5352R Rebuild kit (heavy duty), slipper clutch (steel disc/ aluminum friction pads (3)/ spring (1)/ 2x9.8mm pin/ 5x8mm MW/ 5.0mm NL (1)/ 4.0mm NL (1))
5352X Rebuild kit, slipper clutch (steel disc/ friction pads (3)/ spring (2)/ 2x9.8mm pin/ 5x8mm MW/ 5.0mm NL (1)/ 4.0mm NL (1))
5552X Rebuild kit, slipper clutch (steel disc/ friction pads (3)/ spring (2)/ pin/ 4.0mm NL (1)/ 5.0mm NL (1))
2554 Screws, 3x6mm cap-head machine (hex drive) (6)
6878 Slipper clutch, complete
5556 Slipper pressure plate & hub (aluminum alloy)
5351 Slipper pressure plate and hub (alloy)

Spur Gears & Pinion Gears

6747 Gear, 11-T pinion (32-p) (steel)/ set screw
3942X Gear, 12-T pinion (32-p), heavy duty (machined, hardened steel)/ set screw
3943X Gear, 13-T pinion (32-p), heavy duty (machined, hardened steel)/ set screw
3944X Gear, 14-T pinion (32-p), heavy duty (machined, hardened steel)/ set screw
3945X Gear, 15-T pinion (32-p), heavy duty (machined, hardened steel)/ set screw

STAMPEDE KIT (67014-4)

3946X	**Gear, 16-T pinion (32-p), heavy duty (machined, hardened steel)/ set screw**
3947X	**Gear, 17-T pinion (32-p), heavy duty (machined, hardened steel)/ set screw**
3948X	**Gear, 18-T pinion (32-p), heavy duty (machined, hardened steel)/ set screw**
3949X	**Gear, 19-T pinion (32-p), heavy duty (machined, hardened steel)/ set screw**
3950X	**Gear, 20-T pinion (32-p), heavy duty (machined, hardened steel)/ set screw**
3951X	**Gear, 21-T pinion (32-p), heavy duty (machined, hardened steel)/ set screw**
3952X	**Gear, 22-T pinion (32-p), heavy duty (machined, hardened steel)/ set screw**
6745	Gear, 9-T pinion (32-p) (steel)/ set screw
6842	**Spur gear, 50-tooth (0.8 metric pitch, compatible with 32-pitch)**
6842R	**Spur gear, 50-tooth (0.8 metric pitch, compatible with 32-pitch) (for center differential)**
6843	**Spur gear, 52-tooth (0.8 metric pitch, compatible with 32-pitch)**
6843R	**Spur gear, 52-tooth (0.8 metric pitch, compatible with 32-pitch) (for center differential)**
3956	Spur gear, 54-tooth (0.8 metric pitch, compatible with 32-pitch)
3956R	**Spur gear, 54-tooth (0.8 metric pitch, compatible with 32-pitch) (requires #6814 center differential)**
3956X	**Spur gear, steel, 54-tooth (0.8 metric pitch, compatible with 32-pitch) (requires #6780 center differential)**

Steering Components

1552	Screws, 3x8mm cap-head machine (hex drive) (6)/washers (6)/ wrench
5114	**Ball bearings, blue rubber sealed (5x8x2.5mm) (2)**
2545	Bellcrank bushings (plastic) (5x8x2.5mm) (4)
6845A	**Drag link, machined 6061-T6 aluminum (blue-anodized)**
6845G	**Drag link, machined 6061-T6 aluminum (green-anodized)**
6845T	**Drag link, machined 6061-T6 aluminum (orange-anodized)**
6845R	**Drag link, machined 6061-T6 aluminum (red-anodized)**
2072A	**Gear set (for 2070, 2075 servos)**
2072X	**Gear set, metal (for 2070, 2075 servos)**
2072R	**Gear set, metal, high speed (for 2070, 2075 servos)**
6846	Linkage, steering (3x20mm turnbuckle) (1)/ rod ends (2)/ hollow balls (2)
2742	Rod ends, long (6)/ hollow ball connectors (6)
2074	Servo case/gaskets (for 2056 and 2075 waterproof servos)
2053	Servo gears (for 2055, 2056 servos)
2075R	**Servo, digital high-speed, metal gear (ball bearing), waterproof**
2075	**Servo, digital high-torque (ball bearing), waterproof**
2075X	**Servo, digital high-torque, metal gear (ball bearing), waterproof**
2056	Servo, high-torque, waterproof (blue case)
6845X	Steering bellcranks/ servo saver/ servo saver spring/ servo spring retainer/servo horn, steering
2746	Washers, 3x6mm metal (12)

Suspension Linkage

3641A	Camber link set (plastic / non-adjustable) (front & rear) (grey)
3641	**Camber link set (plastic/ non-adjustable) (front & rear) (black)**
3643X	**Camber links, front (TUBES blue-anodized, 7075-T6 aluminum, stronger than titanium) (83mm) (2)/ rod ends (4)/ aluminum wrench (1) (#2579 3x15 BCS (4) required for installation)**
3643G	**Camber links, front (TUBES green-anodized, 7075-T6 aluminum, stronger than titanium) (83mm) (2)/ rod ends (4)/ aluminum wrench (1) (#2579 3x15 BCS (4) required for installation)**
3643R	**Camber links, front (TUBES red-anodized, 7075-T6 aluminum, stronger than titanium) (83mm) (2)/ rod ends (4)/ aluminum wrench (1) (#2579 3x15 BCS (4) required for installation)**
3644X	**Camber links, rear (TUBES blue-anodized, 7075-T6 aluminum, stronger than titanium) (73mm) (2)/ rod ends (4)/ aluminum wrench (1) (#2579 3x15 BCS (4) required for installation)**
3644G	**Camber links, rear (TUBES green-anodized 7075-T6 aluminum, stronger than titanium) (73mm) (2)/ rod ends (4)/ aluminum wrench (1) (#2579 3x15 BCS (4) required for installation)**
3644R	**Camber links, rear (TUBES red-anodized, 7075-T6 aluminum, stronger than titanium) (73mm) (2)/ rod ends (4)/ aluminum wrench (1) (#2579 3x15 BCS (4) required for installation)**
5525	**Rod ends (12)/ hollow balls (12)**
6834	Suspension pin set, complete (front and rear)
2537	**Threaded rods (20/25/44mm 1 ea.)/ (1) 12mm set screw**
3644	**Turnbuckles, camber link, 39mm (69mm center to center) (assembled with rod ends and hollow balls) (1 left, 1 right)**
3643	**Turnbuckles, camber link, 49mm (82mm center to center) (assembled with rod ends and hollow balls) (1 left, 1 right)**
5539	**Turnbuckles, camber links, 58mm (assembled with rod ends and hollow balls) (2)**

Team Traxxas Items

2514	**Decal sheet, racing sponsors**
6160X	**DVD, Maxx® Power! Full Throttle Action (sleeve)**
9950	**Official Team Traxxas® racing decal set (flag logo/ 6-color)**
9909	**Traxxas® racing banner, red & black (3x7 feet)**

Tires & Wheels

5116	Ball bearings, blue rubber sealed (5x11x4mm) (2)
5854	**Hub retainer, 17mm hubs, M4 X 0.7 (4) (use with #5853X, #6856X, #6469)**
3647	Nuts, 4mm flanged nylon locking (steel, serrated) (8)
1747R	**Nuts, aluminum, flanged, serrated (4mm) (blue-anodized) (4)**
1747G	**Nuts, aluminum, flanged, serrated (4mm) (green-anodized) (4)**
1747P	**Nuts, aluminum, flanged, serrated (4mm) (pink-anodized) (4)**
1985	PTFE-coated washers, 5x8x0.5mm (20) (use with ball bearings)
1647	Silicone grease
2754	Stub axle pins (4)
4175	**Tires & wheels, assembled, glued (2.8") (All-Star black chrome wheels, paddle tires, foam inserts) (nitro rear/ 4WD electric front/rear) (2) (TSM rated)**
3669A	**Tires & wheels, assembled, glued (2.8") (All-Star black chrome wheels, Talon tires, foam inserts) (front/rear, Stampede 4x4) (2)**
3669	**Tires & wheels, assembled, glued (2.8") (All-Star chrome wheels, Talon tires, foam inserts) (front/rear, Stampede 4x4) (2)**
6792	**Tires & wheels, assembled, glued (black 2.8" wheels, Sledgehammer™ tires, foam inserts) (2) (TSM® rated)**
6771	Tires and wheels, assembled, glued 2.8" (All-Star chrome wheels, Maxx® tires, foam inserts) (2)
6770	Tires, Maxx® 2.8" (2)/ foam inserts (2)
3671	**Tires, Talon 2.8" (2)/ foam inserts (2)**
1654	Wheel hubs, hex (rear) (2)/ stub axle pins (2)
1654X	**Wheel hubs, hex (blue-anodized, lightweight aluminum) (2)/ axle pins(4)**
6856X	**Wheel hubs, splined, 17mm, short (4)/ wheel nuts, splined, 17mm (4) (blue-anodized)/ hub retainer M4 X 0.7 (4)/ axle pin (4)/ wrench, 5mm**
5353	**Wheel nuts, splined, 17mm (blue-anodized) (4)**
5480X	**Wheel wrench, splined, 17mm**
5576A	**Wheels, All-Star 2.8" (black chrome) (front/rear, Stampede 4x4) (2)**
5576	Wheels, All-Star 2.8" (chrome) (Stampede 4x4 front or rear) (2)
5572	**Wheels, Twin-Spoke 2.8" (chrome) (front/rear, Stampede 4x4) (2)**

Traxxas Tools

3433X	**Body reamer (aluminum handle)**
3433	**Body reamer (plastic handle)**
3436	**Cap, body reamer**
3432	**Scissors, curved tip**
3431	**Scissors, straight tip**
8712	**Speed Bit Essentials Set, hex and nut driver, 7-piece, includes premium handle (medium), travel pouch, hex drivers (straight: 1.5mm, 2.0mm, 2.5mm) and nut drivers (5.0mm, 5.5mm, 7.0mm, and 8.0mm), 1/4" drive**
8721	**Speed bit handle, medium (one piece)**
8720	**Speed bit handle, premium, large (rubber overmold)**
8722	**Speed bit handle, premium, medium (rubber overmold)**
8710	**Speed Bit Master Set, hex and nut driver, 13-piece, includes premium handle (medium), travel pouch, hex drivers (straight: 1.5mm, 2.0mm, 2.5mm, 3.0mm), (ball-end: 2.0mm, 2.5mm, 3.0mm), and nut drivers (4.00mm, 4.50mm, 5.00mm, 5.50mm, 7.00mm, 8.00mm),**
8711	**Speed Bit Master Set, hex driver, 7-piece straight and ball end, includes premium handle (medium), travel pouch, hex drivers (straight: 1.5mm, 2.0mm, 2.5mm, 3.0mm) (ball end: 2.0mm, 2.5mm, 3.0mm), 1/4" drive**
8719	**Speed Bit Master Set, nut driver, 6-piece, includes premium handle (medium), travel pouch, and nut drivers (4.0mm, 4.5mm, 5.0mm, 5.5mm, 7.0mm, 8.0mm), 1/4" drive**
8716	**Speed Bit Set, hex driver, 2-piece ball-end (2.0mm, 2.5mm), 1/4" drive**
8716X	**Speed Bit Set, hex driver, 3-piece ball-end (2.0mm, 2.5mm, 3.0mm), 1/4" drive**
8715	**Speed Bit Set, hex driver, 3-piece straight (1.5mm, 2.0mm, 2.5mm), 1/4" drive**
8715X	**Speed Bit Set, hex driver, 4-piece straight (1.5mm, 2.0mm, 2.5mm, 3.0mm), 1/4" drive**
3415	**Tool set with pouch (includes 1.5mm, 2.0mm, 2.5mm, 3.0mm, 3.5mm, 4mm drivers/ 4mm, 5mm, 5.5mm, 7mm and 8mm nut drivers/ 2mm, 4mm, and 5mm slotted screwdrivers/ #00 Phillips, #0 Phillips, and #1 Phillips screwdrivers/ 4mm and 8mm wrench/ driver handle**

Turnbuckles & Threaded Rods

3643X	Camber links, front (TUBES blue-anodized, 7075-T6 aluminum, stronger than titanium) (83mm) (2)/ rod ends (4)/ aluminum wrench (1) (#2579 3x15 BCS (4) required for installation)
3643G	Camber links, front (TUBES green-anodized, 7075-T6 aluminum, stronger than titanium) (83mm) (2)/ rod ends (4)/ aluminum wrench (1) (#2579 3x15 BCS (4) required for installation)
3643R	Camber links, front (TUBES red-anodized, 7075-T6 aluminum, stronger than titanium) (83mm) (2)/ rod ends (4)/ aluminum wrench (1) (#2579 3x15 BCS (4) required for installation)
3644X	Camber links, rear (TUBES blue-anodized, 7075-T6 aluminum, stronger than titanium) (73mm) (2)/ rod ends (4)/ aluminum wrench (1) (#2579 3x15 BCS (4) required for installation)
3644G	Camber links, rear (TUBES green-anodized 7075-T6 aluminum, stronger than titanium) (73mm) (2)/ rod ends (4)/ aluminum wrench (1) (#2579 3x15 BCS (4) required for installation)
3644R	Camber links, rear (TUBES red-anodized, 7075-T6 aluminum, stronger than titanium) (73mm) (2)/ rod ends (4)/ aluminum wrench (1) (#2579 3x15 BCS (4) required for installation)
5525	Rod ends (12)/ hollow balls (12)
3644	Turnbuckles, camber link, 39mm (69mm center to center) (assembled with rod ends and hollow balls) (1 left, 1 right)
3643	Turnbuckles, camber link, 49mm (82mm center to center) (assembled with rod ends and hollow balls) (1 left, 1 right)
5539	Turnbuckles, camber links, 58mm (assembled with rod ends and hollow balls) (2)

If you have questions or need technical assistance, call Traxxas at:

1-888-TRAXXAS

(1-888-872-9927) (U.S. residents only)

For orders, calls outside the U.S., and other information, call 972-549-3000,
or fax to 972-549-3011 e-mail Traxxas at support@Traxxas.com

TRAXXAS.com

STAMPEDE 4X4

MODEL 67054-1

1/10 SCALE 4WD MONSTER TRUCK



30+ mph

HIGH-CAPACITY 3000 MAH 7-CELL BATTERY AND INCLUDED DC CHARGER

WATERPROOF XL-5 ESC AND TITAN 12T MOTOR

TQ 2.4GHz TRANSMITTER

HIGH-PERFORMANCE MONSTER TRUCK!

Whether you're going through muddy water crossings or just having fun crushing your buddies' cars, the Stampede 4X4 just doesn't know when to quit. The Stampede 4X4 is overbuilt and Traxxas Tough to withstand all the 4-wheel drive monster mayhem you can dish out. Its tall, drive-over-anything ground clearance and ultra-tough, long-arm suspension make Stampede 4X4 feel nearly indestructible. Chrome All-Star™ 2.8" wheels give Stampede 4X4 aggressive style, and soft Chevron Maxx™ tires deliver true multi-terrain capability. The XL-5 ESC and Titan 550 motor dish out plenty of driving excitement. It's all waterproof, so the fun keeps going through all kinds of wet conditions! No other truck offers Stampede 4X4's unique style, capability, and reputation for durability. Stampede 4X4 is perfect for almost any age driver or skill level and comes fully assembled, painted, and Ready-to-Drive with included 7-cell 8.4V NiMH battery pack and charger. Speed, style, versatility, and fun…Stampede 4X4 has it all!

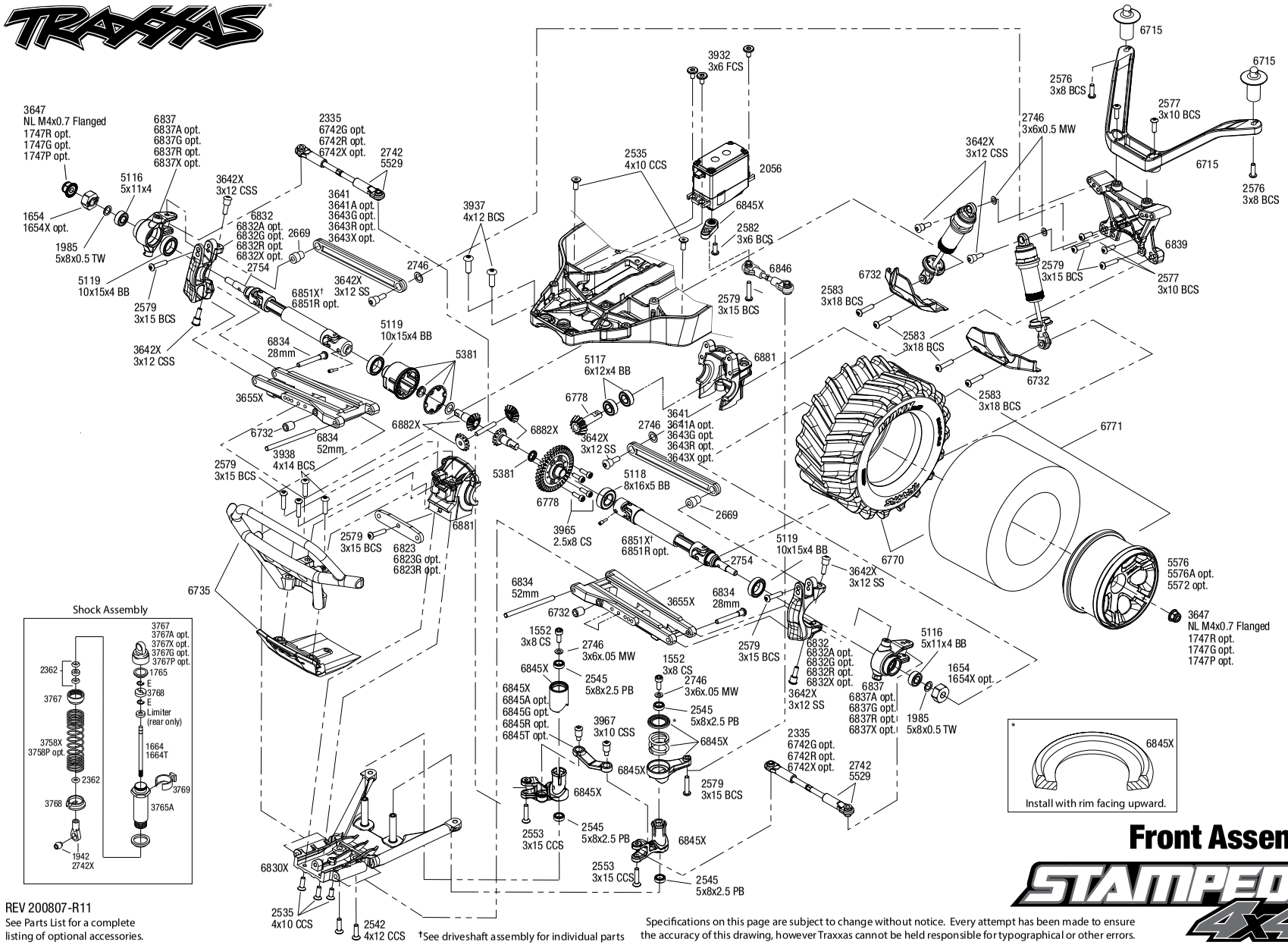

Front Assembly

REV 200807-R11

See Parts List for a complete listing of optional accessories.

†See driveshaft assembly for individual parts

Specifications on this page are subject to change without notice. Every attempt has been made to ensure the accuracy of this drawing, however Traxxas cannot be held responsible for typographical or other errors.

STAMPEDE 4X4 (67054-1)

Chassis Assembly

REV 200807-R11

See Parts List for a complete listing of optional accessories.

Specifications on this page are subject to change without notice. Every attempt has been made to ensure the accuracy of this drawing, however Traxxas cannot be held responsible for typographical or other errors.

STAMPEDE 4X4

Rear Assembly

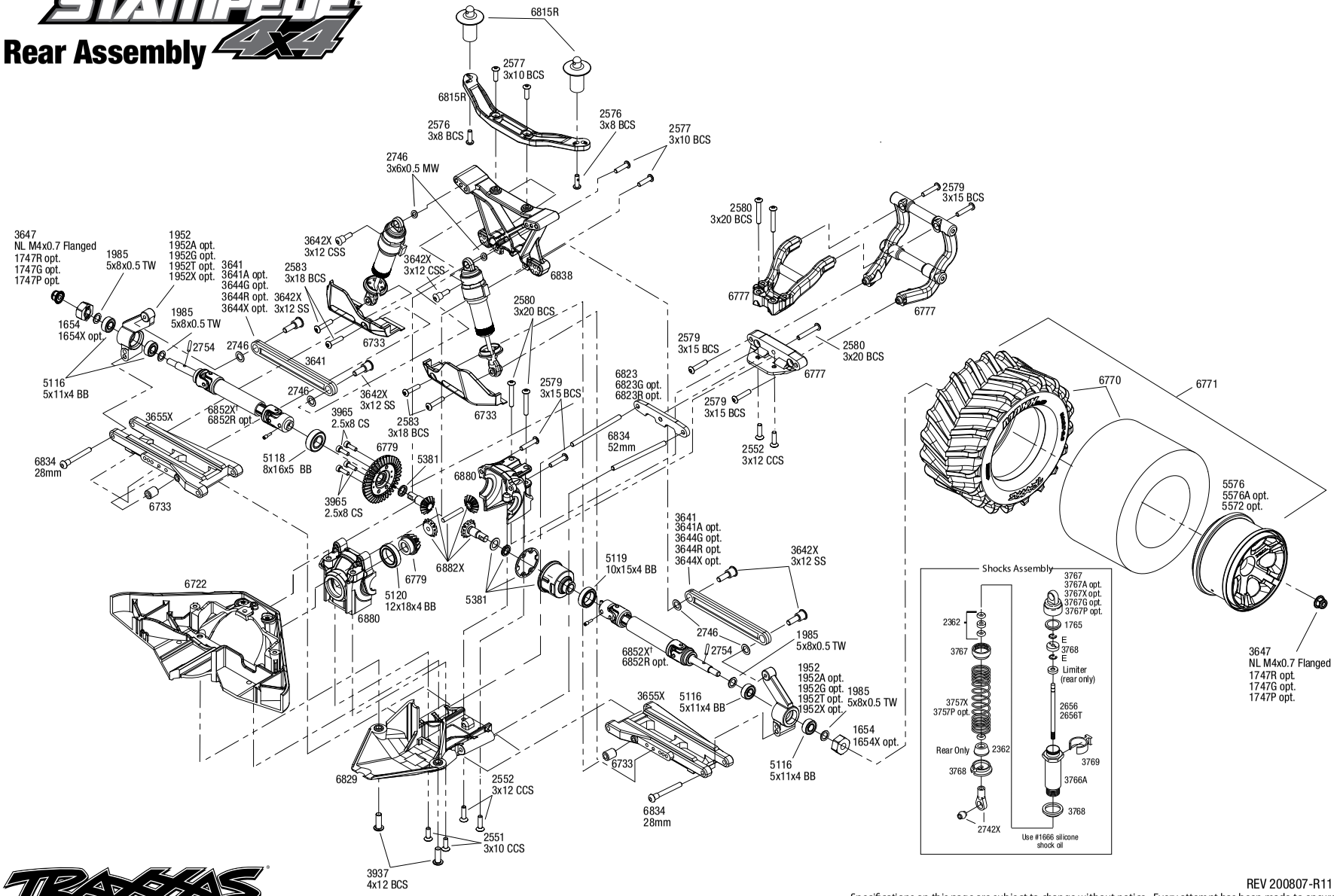

See Parts List for a complete listing of optional accessories.

REV 200807-R11

Specifications on this page are subject to change without notice. Every attempt has been made to ensure the accuracy of this drawing, however Traxxas cannot be held responsible for typographical or other errors.

STAMPEDE 4X4

Center Driveline Assembly

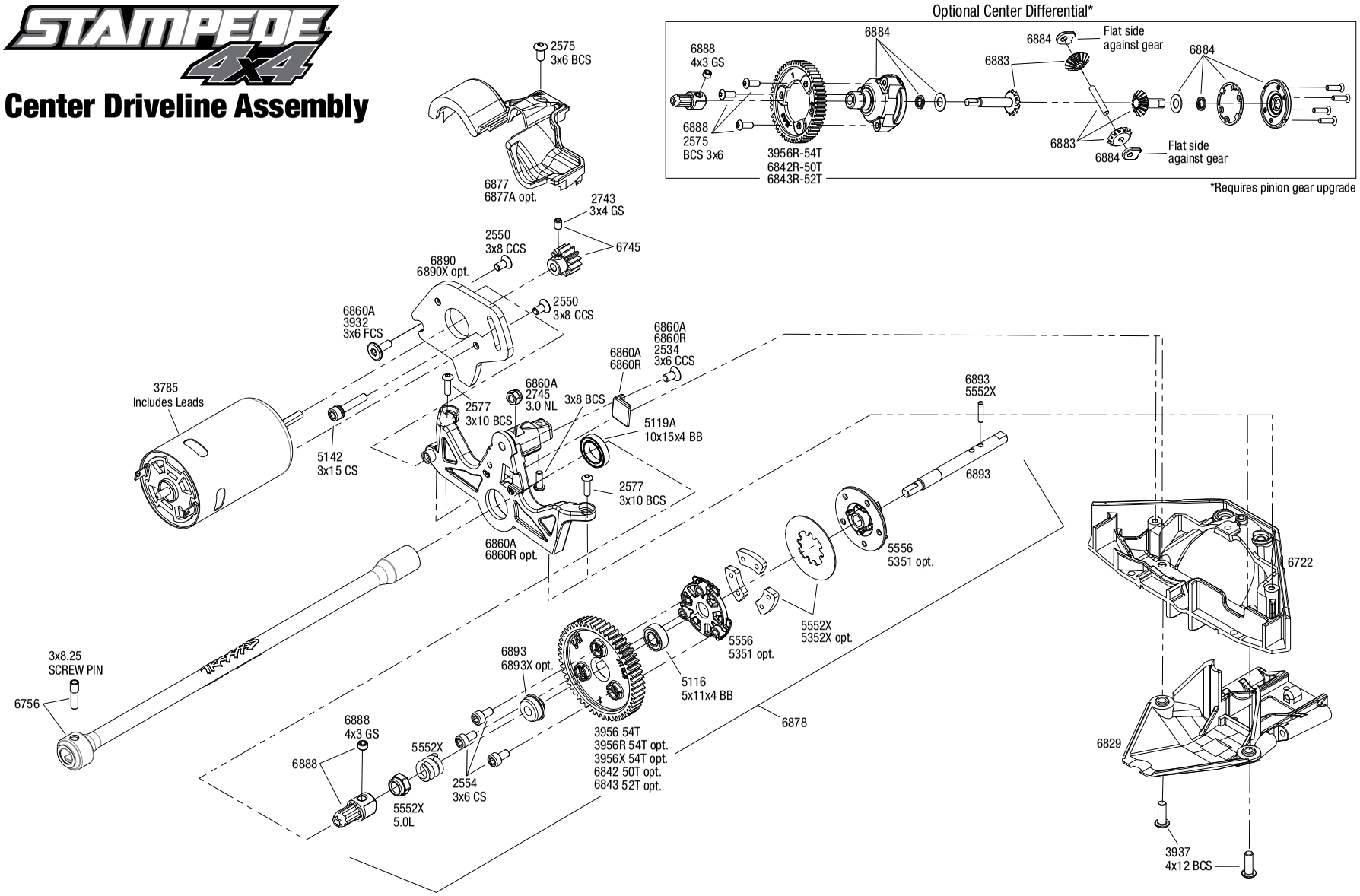

See Parts List for a complete listing of optional accessories.

REV 200807-R11

Specifications on this page are subject to change without notice. Every attempt has been made to ensure the accuracy of this drawing, however Traxxas cannot be held responsible for typographical or other errors.

Driveshaft Assembly

Rear Driveshaft Assembly

Available fully assembled as part #6852X

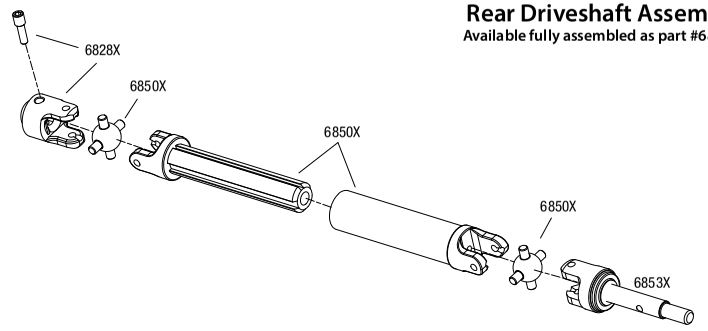

Front Driveshaft Assembly

Available fully assembled as part #6851X

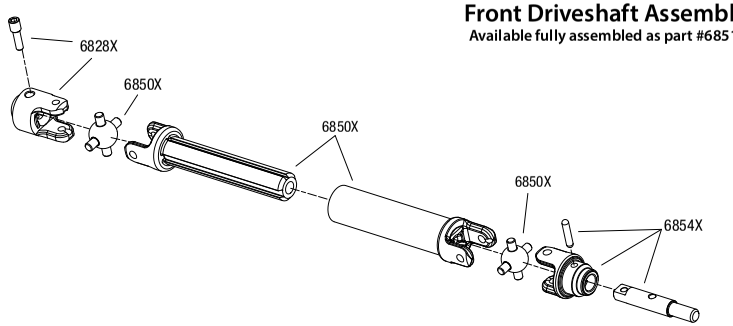

Modular Assembly

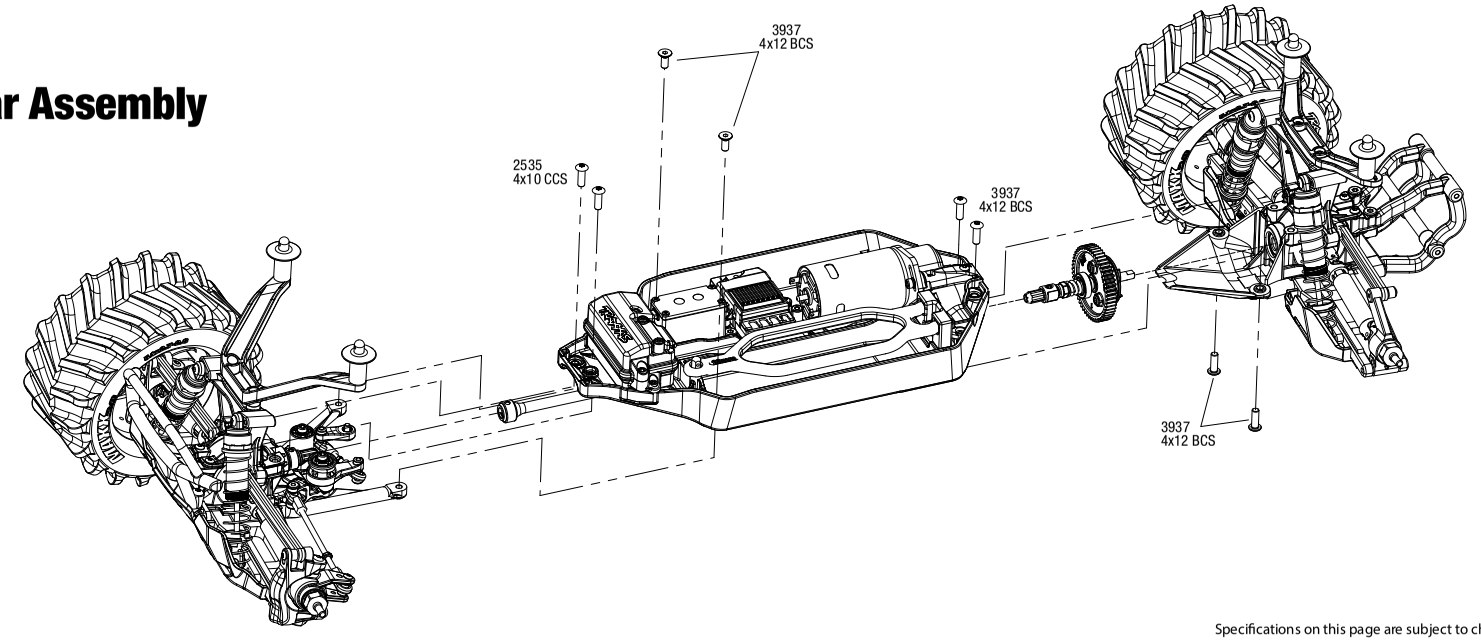

REV 200807-R11

Specifications on this page are subject to change without notice.
Every attempt has been made to ensure the accuracy of this drawing, however Traxxas cannot be held responsible for typographical or other errors. See Parts List for a complete listing of optional accessories.

STAMPEDE 4X4 (67054-1)

PARTS SHOWN IN BOLD ARE OPTIONAL ACCESSORIES.

Part categories and individual part listings are arranged alphabetically.

Bearings & Bushings

4607	**Ball bearings (5x11x4mm) (8)**
4612	**Ball bearings (10x15x4mm) (2)**
2728	**Ball bearings (5x8x2.5mm) (2)**
5119	Ball bearings, blue rubber sealed (10x15x4mm) (2)
5120	Ball bearings, blue rubber sealed (12x18x4mm) (2)
5116	Ball bearings, blue rubber sealed (5x11x4mm) (2)
5114	**Ball bearings, blue rubber sealed (5x8x2.5mm) (2)**
5117	Ball bearings, blue rubber sealed (6x12x4mm) (2)
5118	Ball bearings, blue rubber sealed (8x16x5mm) (2)
2545	Bellcrank bushings (plastic) (5x8x2.5mm) (4)
1985	PTFE-coated washers, 5x8x0.5mm (20) (use with ball bearings)

Body & Accessories

1926	Antenna caps, vinyl (2)/ antenna spool
1726	Antenna, tube (1)/ vinyl antenna cap (1)/ wire retainer (1)
3935	Body clip (mounting clip), angled, 90-degrees (10)
3935A	**Body clip (mounting clip), angled, 90-degrees (black) (10)**
3934	Body clips, heavy duty (12)
1815	Body washers (8)
6716	**Body washers, foam, 2mm (2)/ 3mm (2)/ 4mm (4)**
3617	**Body, Stampede® (clear, requires painting) (requires #3614 to mount)**
6711X	**Body, Stampede® 4X4 VXL, ProGraphix® (Graphics are printed, requires paint & final color application)/ decal sheet**
6714	**Body, Stampede® 4X4, ProGraphix® (Graphics are printed, requires paint & final color application)/ decal sheet**
2514	**Decal sheet, racing sponsors**
9950	**Official Team Traxxas® racing decal set (flag logo/ 6-color)**
5185	**Tires, rubber (2) (fits Traxxas® wheelie bar wheels)**
4974	**Wheelie bar arm (1)/ connector (1)/ 3x12 SS (hex drive) (4)**
6777	Wheelie bar mounts/ rear skidplate (black)
4976	**Wheels (4)/ axles (2) (for T-Maxx®/E-Maxx wheelie bar)**
5186A	**Wheels, aluminum (blue-anodized) (2)/ 5x8mm ball bearings (4)/ axles (2)/ rubber tires (2)**
5186	**Wheels, aluminum (red-anodized) (2)/ 5x8mm ball bearings (4)/ axles (2)/ rubber tires (2)**

Center Driveline

5119A	Ball bearings, black rubber sealed (10x15x4mm) (2)
5120	Ball bearings, blue rubber sealed (12x18x4mm) (2)
5116	Ball bearings, blue rubber sealed (5x11x4mm) (2)
5117	Ball bearings, blue rubber sealed (6x12x4mm) (2)
6893G	**Bearing adapter, 6061-T6 aluminum (green-anodized) (1)/ 10x15x4mm ball bearing (black rubber sealed) (1) (for slipper shaft)**
6893X	**Bearing adapter, 6160-T6 aluminum (blue-anodized) (1)/10x15x4mm ball bearing (blue rubber sealed) (1) (for slipper shaft)**
6741	Cover, center driveshaft (clear)
6877A	**Cover, gear (clear)**
6877	Cover, gear/ motor wire hold-down clip
6814	**Differential kit, center (complete)**
6888	Drive hub, center, rear (1)/ 4x3 GS (1)
6888X	**Drive hub, front, hardened steel (1)/ screw pin (1)**
6755	**Driveshaft, center, 6061-T6 aluminum (blue-anodized)**
6755G	**Driveshaft, center, 6061-T6 aluminum (green-anodized)**
6755R	**Driveshaft, center, 6061-T6 aluminum (red-anodized)**
6756	Driveshaft, center, plastic (blue)/ screw pin
6883	**Gear set, center differential (output gears (2)/ spider gears (2)/ spider gear shaft)**
5148	Grease, white lithium
6884	**Housing, center differential/ x-ring gaskets (2)/ ring gear gasket/ bushings (2)/ 5x10x0.5 TW (2)/ CCS 2.5x8 (4)**
6893	Input shaft (slipper shaft)/ bearing adapter (1)/pin (1)
6890	Plate, motor
6890X	**Plate, motor, 6061-T6 aluminum (blue-anodized)**
5352R	**Rebuild kit (heavy duty), slipper clutch (steel disc/ aluminum friction pads (3)/ spring (1)/ 2x9.8mm pin/ 5x8mm MW/ 5.0mm NL (1)/ 4.0mm NL (1))**
5352X	**Rebuild kit, slipper clutch (steel disc/ friction pads (3)/ spring (2)/ 2x9.8mm pin/ 5x8mm MW/ 5.0mm NL (1)/ 4.0mm NL (1))**
5552X	**Rebuild kit, slipper clutch (steel disc/ friction pads (3)/ spring (2)/ pin/ 4.0mm NL (1)/ 5.0mm NL (1))**
2575	Screws, 3x6mm button-head machine (hex drive) (6)
2554	Screws, 3x6mm cap-head machine (hex drive) (6)
3932	Screws, 3x6mm flat-head machine (hex drive) (6)
1647	Silicone grease
6878	Slipper clutch, complete
5556	Slipper pressure plate & hub (aluminum alloy)
5351	**Slipper pressure plate and hub (alloy)**

Chassis & Attachments

6715	Body mount (1)/ body mount post (2) (front)
6815R	Body mount (1)/ body mount post (2)/ body post extensions (2) (front or rear)
3628	Box, receiver (sealed)/ foam pad/2.5x8mm CS (4)/ 3x10mm CS (2)
6735	Bumper, front/ skidplate, front (black)
6722	Chassis
6727	Hold down, battery (2)/ hold down retainer/ battery post/ angled body clip
6727X	**Hold down, battery/ hold down retainer/ battery post/ angled body clip (allows for installation of taller, multi-cell batteries)**
3629	Seal kit, receiver box (includes o-ring, seals, and silicone grease)
5185	**Tires, rubber (2) (fits Traxxas® wheelie bar wheels)**
4974	**Wheelie bar arm (1)/ connector (1)/ 3x12 SS (hex drive) (4)**
6777	Wheelie bar mounts/ rear skidplate (black)
4976	**Wheels (4)/ axles (2) (for T-Maxx®/E-Maxx wheelie bar)**
5186A	**Wheels, aluminum (blue-anodized) (2)/ 5x8mm ball bearings (4)/ axles (2)/ rubber tires (2)**
5186	**Wheels, aluminum (red-anodized) (2)/ 5x8mm ball bearings (4)/ axles (2)/ rubber tires (2)**

Differential Components

5119	Ball bearings, blue rubber sealed (10x15x4mm) (2)
5117	Ball bearings, blue rubber sealed (6x12x4mm) (2)
5118	Ball bearings, blue rubber sealed (8x16x5mm) (2)
5381	Carrier, differential/ x-ring gaskets (2)/ ring gear gasket/ 6x10x0.5 TW
6780	**Differential kit, center (complete)**
6814	**Differential kit, center (complete)**
5136X	**Differential oil kit (1 each: 10K, 30K, 50K weights)**
6783	**Gear set, center differential (output gears (2)/ spider gears (4)/ spider gear shaft (2))**
6882X	Gear set, differential (output gears (2)/ spider gears (2)/ spider gear shaft, carrier support)
6781	**Housing, center differential (aluminum)/ x-ring gaskets (2)/ ring gear gasket/ bushings (2)/ 5x10x0.5mm PTFE-coated washers (2)/ 2.5x8 CCS (4)**
6881	Housings, differential, front
6880	Housings, differential, rear
6782	**Output gears, center differential, hardened steel (2)**
5379X	**Ring gear, differential/ pinion gear, differential**
6778	Ring gear, differential/ pinion gear, differential (12/47 ratio) (front)
6779	Ring gear, differential/ pinion gear, differential (12/47 ratio) (rear)
5379R	**Ring gear, differential/ pinion gear, differential (machined, spiral cut) (front)**
6879R	**Ring gear, differential/ pinion gear, differential (machined, spiral cut) (rear)**
6879	**Ring gear, differential/ pinion gear, differential (rear)**
3965	Screws, 2.5x8mm cap-head machine (6)
1647	Silicone grease

Driveline Components

6455	**Axle carriers, rear, 6061-T6 aluminum, left & right (blue-anodized) (Compatible only when installing #6451 & #6452 steel constant-velocity driveshafts)**
5119	Ball bearings, blue rubber sealed (10x15x4mm) (2)
5116	Ball bearings, blue rubber sealed (5x11x4mm) (2)
5117	**Ball bearings, blue rubber sealed (6x12x4mm) (2) (Compatible only when installing #6451 & #6452 steel constant-velocity driveshafts)**
9059X	**Cross pin (2)/ drive pin (2) (repairs 2 axle shafts)**
9057X	**Differential output shafts, steel-splined constant-velocity (2)**
6828A	**Differential output yoke assembly, extreme heavy duty (2) (left or right, front or rear) (assembled with external-splined half shaft)**
6828X	Differential output yokes, heavy duty (2)/ screw pin (2)
6851X	Driveshaft assembly, front, heavy duty (1) (left or right) (fully assembled, ready to install)/ screw pin (1)
6852X	Driveshaft assembly, rear, heavy duty (1) (left or right) (fully assembled, ready to install)/ screw pin (1)
6851R	**Driveshafts, front, steel-spline constant-velocity (complete assembly) (2)**
9051X	**Driveshafts, front, steel-spline constant-velocity (complete assembly) (2)**
6852R	**Driveshafts, rear, steel-spline constant-velocity (complete assembly) (2)**

9052X **Driveshafts, rear, steel-spline constant-velocity (complete assembly) (2)**
9055X **Half shaft, external splined (steel-spline constant velocity) (1)**
6750 **Half shaft, external splined (steel-spline constant-velocity) (1)**
9056X **Half shaft, internal splined (steel-spline constant velocity) (1)**
6751 **Half shaft, internal splined (steel-spline constant-velocity) (1)**
6850X Half shafts, heavy duty (external splined (2)/ internal splined (2))/ metal u-joints (4)
6757 **Rebuild kit, steel-splined constant-velocity driveshafts (includes pins, dustboots, lube, and hardware)**
9058X **Rebuild kit, steel-splined constant-velocity driveshafts (includes pins, lube, and hardware for two axle shafts)**
6439 **Steering blocks, 6061-T6 aluminum, left & right (blue-anodized) (Compatible only when installing #6451 & #6452 steel constant-velocity driveshafts)**
6854A **Stub axle assembly, front, outer, extreme heavy duty (1) (left or right) (assembled with internal-splined half shaft)**
6853A **Stub axle assembly, rear, outer, extreme heavy duty (1) (left or right) (assembled with internal-splined half shaft)**
6754 **Stub axle, front, 5mm (steel-splined constant-velocity driveshaft) (1)**
9054X **Stub axle, front, steel-splined constant velocity (1)**
6753 **Stub axle, rear, 5mm (steel-splined constant-velocity driveshaft) (1)**
9053X **Stub axle, rear, steel-splined constant velocity (1)**
6854X Stub axles, front, heavy duty (2)/ yokes (2)/ pins (4)
6853X Stub axles, rear, heavy duty (2)/pins (2)
6869 **Wheel adaptors, 12mm hex, 6061-T6 aluminum (blue-anodized) (4)/ screw pins (4)/ drill bit, 0.25 inch (for 6mm shafts) (requires #6451 (x2), #6452 (x2), #6439, #6455, #5117 (x3))**
1654X **Wheel hubs, hex (blue-anodized, lightweight aluminum) (2)/ axle pins(4)**

Front Suspension & Steering

5114 **Ball bearings, blue rubber sealed (5x8x2.5mm) (2)**
2545 Bellcrank bushings (plastic) (5x8x2.5mm) (4)
6823 Bulkhead tie bars, front & rear, aluminum (blue-anodized)
6823G **Bulkhead tie bars, front & rear, aluminum (green-anodized)**
6823R **Bulkhead tie bars, front & rear, aluminum (red-anodized)**
3641A Camber link set (plastic / non-adjustable) (front & rear) (grey)
3641 **Camber link set (plastic/ non-adjustable) (front & rear) (black)**
3643X **Camber links, front (TUBES blue-anodized, 7075-T6 aluminum, stronger than titanium) (83mm) (2)/ rod ends (4)/ aluminum wrench (1) (#2579 3x15 BCS (4) required for installation)**
3643G **Camber links, front (TUBES green-anodized, 7075-T6 aluminum, stronger than titanium) (83mm) (2)/ rod ends (4)/ aluminum wrench (1) (#2579 3x15 BCS (4) required for installation)**
3643R **Camber links, front (TUBES red-anodized, 7075-T6 aluminum, stronger than titanium) (83mm) (2)/ rod ends (4)/ aluminum wrench (1) (#2579 3x15 BCS (4) required for installation)**
6832X **Caster blocks (c-hubs), 6061-T6 aluminum (blue-anodized), left & right**
6832G **Caster blocks (c-hubs), 6061-T6 aluminum (green-anodized), left & right**
6832A **Caster blocks (c-hubs), 6061-T6 aluminum (orange-anodized), left & right**
6832R **Caster blocks (c-hubs), 6061-T6 aluminum (red-anodized), left & right**
6832 Caster blocks (c-hubs), left & right
6845A **Drag link, machined 6061-T6 aluminum (blue-anodized)**
6845G **Drag link, machined 6061-T6 aluminum (green-anodized)**
6845T **Drag link, machined 6061-T6 aluminum (orange-anodized)**
6845R **Drag link, machined 6061-T6 aluminum (red-anodized)**
6895 **Linkage, front sway bar (2) (assembled with rod ends, hollow balls and ball studs)**
6897 **Linkage, rear sway bar (2) (assembled with rod ends, hollow balls and ball studs)**
6846 **Linkage, steering (3x20mm turnbuckle) (1)/ rod ends (2)/ hollow balls (2)**
2669 Piston head set (2-hole (2)/ 3-hole (2))/ shock mounting bushings & washers (2) (Big Bore Shocks)
2742 Rod ends, long (6)/ hollow ball connectors (6)
3646 Screws, 3x15mm flat-head machine (hex drive) (6)
5529 Shim set, 3x7x1mm (2), 3x6x0.5mm (4), 3x7x2mm (2)/ hollow balls, captured (4)
6839 Shock tower, front
6839X **Shock tower, front, 7075-T6 aluminum (blue-anodized)**
6845X Steering bellcranks/ servo saver/ servo saver spring/ servo spring retainer/servo horn, steering
6837X **Steering blocks, 6061-T6 aluminum (blue-anodized), left & right**
6837G **Steering blocks, 6061-T6 aluminum (green-anodized), left & right**
6837A **Steering blocks, 6061-T6 aluminum (orange-anodized), left & right**
6837R **Steering blocks, 6061-T6 aluminum (red-anodized), left & right**
6837 Steering blocks, left & right
6854A **Stub axle assembly, front, outer, extreme heavy duty (1) (left or right) (assembled with internal-splined half shaft)**
6854X Stub axles, front, heavy duty (2)/ yokes (2)/ pins (4)
6732 Suspension arm guards, front (2)/ guard spacers (2)/ hollow balls (2)/ 3X16mm BCS (8)
3655P **Suspension arms, blue, front/rear (left & right), heavy duty (2)**
3655R **Suspension arms, front/rear (left & right), heavy duty (2)**
3655G **Suspension arms, green, front/rear (left & right), heavy duty (2)**
3655X Suspension arms, left & right
3655T **Suspension arms, orange, front/rear (left & right), heavy duty (2)**
3655L **Suspension arms, red, front/rear (left & right), heavy duty (2)**
3655A **Suspension arms, white, front/rear (left & right), heavy duty (2)**
6834 Suspension pin set, complete (front and rear)
6898 **Sway bar kit (front and rear) (includes front and rear sway bars and adjustable linkage)**
6742X **Toe links (TUBES blue-anodized, 7075-T6 aluminum, stronger than titanium) (87mm) (2)/ rod ends (4)/ aluminum wrench (1)**
6742G **Toe links (TUBES green-anodized, 7075-T6 aluminum, stronger than titanium) (87mm) (2)/ rod ends (4)/ aluminum wrench (1)**
6742R **Toe links (TUBES red-anodized, 7075-T6 aluminum, stronger than titanium) (87mm) (2)/ rod ends (4)/ aluminum wrench (1)**
2335 Turnbuckles (72mm) (Tie rods or optional rear camber rods) (2)
3643 **Turnbuckles, camber link, 49mm (82mm center to center) (assembled with rod ends and hollow balls) (1 left, 1 right)**
5539 **Turnbuckles, camber links, 58mm (assembled with rod ends and hollow balls) (2)**
6896 **Wires, sway bar (front & rear, hard & soft) / 3x6 FCS (4)**

Hardware

1926 Antenna caps, vinyl (2)/ antenna spool
1726 Antenna, tube (1)/ vinyl antenna cap (1)/ wire retainer (1)
3642 Attachment screws, shock (3x12mm shoulder screws) (6)
1552 Screws, 3x8mm cap-head machine (hex drive) (6)/washers (6)/ wrench
3935 Body clip (mounting clip), angled, 90-degrees (10)
3935A **Body clip (mounting clip), angled, 90-degrees (black) (10)**
3934 Body clips, heavy duty (12)
1589 Double-sided adhesive tape (25mm x 25mm) (2)
2586 Screws, 3x15mm cap-head machine (hex drive) (6)
2745 Nuts, 3mm nylon locking (12)
3647 Nuts, 4mm flanged nylon locking (steel, serrated) (8)
1747 **Nuts, 4mm nylon locking (10)**
1747R **Nuts, aluminum, flanged, serrated (4mm) (blue-anodized) (4)**
1747G **Nuts, aluminum, flanged, serrated (4mm) (green-anodized) (4)**
1747P **Nuts, aluminum, flanged, serrated (4mm) (pink-anodized) (4)**
1747A **Nuts, aluminum, flanged, serrated (4mm) (red-anodized) (4)**
1985 PTFE-coated washers, 5x8x0.5mm (20) (use with ball bearings)
5525 Rod ends (12)/ hollow balls (12)
2742X Rod ends, short (6)/ hollow balls (6)
3347 Screws, 2.5x5mm button-head machine (hex drive) (6)
3215 Screws, 2.5x6mm cap-head machine (hex drive) (6)
3965 Screws, 2.5x8mm cap-head machine (6)
2577 Screws, 3x10mm button-head machine (hex drive) (6)
2578 Screws, 3x12mm button-head machine (hex drive) (6)
2552 Screws, 3x12mm countersunk machine (6) (hex drive)
2579 Screws, 3x15mm button-head machine (hex drive) (6)
3646 Screws, 3x15mm flat-head machine (hex drive) (6)
2583 Screws, 3x18mm button-head machine (hex drive) (6)
2580 Screws, 3x20mm button-head machine (hex drive) (6)
2591 Screws, 3x23mm button-head machine (hex drive) (6)
2582 Screws, 3x30mm button-head machine (hex drive) (6)
2592 Screws, 3x40mm button-head machine (hex drive) (6)
2575 Screws, 3x6mm button-head machine (hex drive) (6)
2554 Screws, 3x6mm cap-head machine (hex drive) (6)
2534 Screws, 3x6mm countersunk machine (6) (hex drive)
3932 Screws, 3x6mm flat-head machine (hex drive) (6)
2576 Screws, 3x8mm button-head machine (hex drive) (6)
3931 Screws, 3x8mm flat-head machine (hex drive) (6)
3937 Screws, 4x12mm button-head machine (hex drive) (6)
2542 Screws, 4x12mm countersunk machine (hex drive) (6)
2546 Screws, 4x15mm countersunk machine (hex drive) (6)
2743 Set (grub) screws, 3mm hardened (12)
3642X Shoulder screws, Ultra Shocks (3x12 hex drive) (6)
2754 Stub axle pins (4)
2746 Washers, 3x6mm metal (12)

LED Lights

6784 **LED light bar (chrome, 4 clear lights)**

STAMPEDE 4X4 (67054-1)

Motors & Electronics

1726 Antenna, tube (1)/ vinyl antenna cap (1)/ wire retainer (1)
2260 BEC assembly (complete)
2252 Gear set, metal (for 2250, 2255 servos)
6860A Motor mount (assembled with 3x6 flat-head machine screw)/ 3.0mm NL (1)
6860R Motor mount, 6061-T6 aluminum (blue-anodized)
3785 Motor, Titan® 12T (12-Turn, 550 size)
3351R Motor, Velineon® 3500, brushless (assembled with 12-gauge wire and gold-plated bullet connectors)
3347 Screws, 2.5x5mm button-head machine (hex drive) (6)
3932 Screws, 3x6mm flat-head machine (hex drive) (6)
2254 Servo case, aluminum (blue-anodized) (middle) (for 2250 servo)
2253 Servo case, aluminum (red-anodized) (middle) (for 2255 servo)
2251 Servo case, plastic (top, middle, bottom)/ gaskets/ hardware (for 2250, 2255 servos)
2075R Servo, digital high-speed, metal gear (ball bearing), waterproof
2075 Servo, digital high-torque (ball bearing), waterproof
2250 Servo, digital high-torque 330 coreless, metal gear (ball bearing), waterproof
2255 Servo, digital high-torque 400 brushless, metal gear (ball bearing), waterproof
2075X Servo, digital high-torque, metal gear (ball bearing), waterproof
3350R Velineon® VXL-3s Brushless Power System, waterproof (includes VXL-3s waterproof ESC, Velineon 3500 motor, and speed control mounting plate (part #3725R))
3355R Velineon® VXL-3s Electronic Speed Control, waterproof (brushless) (fwd/rev/brake)
3018R XL-5 Electronic Speed Control, waterproof (land version, low-voltage detection, fwd/rev/brake)

Radio System, Batteries & Chargers

2842X 5000mAh 7.4v 2-Cell 25C LiPo Battery
2843X 5800mAh 7.4v 2-Cell 25C LiPo Battery
2976 AC to DC converter, 40W
2938X Adapter, Traxxas® iD® LiPo battery (adapts Traxxas iD batteries to separate balance ports)
2943 Battery charge indicators (green (4), blue (4), grey (4))
6548 Battery door, transmitter (replacement for #6516, 6517, 6528, 6529, 6530 transmitters)
2914 Battery, Power Cell AA Alkaline (4)
2926X Battery, Power Cell, 3000mAh (NiMH, 7-C hump, 8.4V)
2941X Battery, Series 3 Power Cell, 3300mAh (NiMH, 7-C hump, 8.4V)
2951X Battery, Series 4 Power Cell, 4200mAh (NiMH, 7-C hump, 8.4V)
2961X Battery, Series 5 Power Cell, 5000mAh (NiMH, 7-C hump, 8.4V)
2984 Battery/charger completer pack (includes #2969 2-amp NiMH peak detecting AC charger (1), #2926X 3000mAh 8.4V 7-cell NiMH battery (1))
2992 Battery/charger completer pack (includes #2970 iD® charger (1), #2843X 5800mAh 7.4V 2-cell 25C LiPo battery (1))
2260 BEC assembly (complete)
2975 Charger, DC, 4 amp (6 - 7 cell, 7.2 - 8.4 volt, NiMH)
2972 Charger, EZ-Peak® Dual, 100W, NiMH/LiPo with iD® Auto Battery Identification
2973 Charger, EZ-Peak® Live Dual, 200W, NiMH/LiPo with iD® Auto Battery Identification
2971 Charger, EZ-Peak® Live, 100W, NiMH/LiPo with iD® Auto Battery Identification
2970 Charger, EZ-Peak® Plus, 4 amp, NiMH/LiPo with iD® Auto Battery Identification
6525 Communication link, telemetry expander
6541 Connector, power tap (with cable) (long)/ wire tie
2978 Fuse, charger, 5A (2) (for #2974, 2975, 2977)
2252 Gear set, metal (for 2250, 2255 servos)
2968X LiPo cell voltage checker/balancer (includes #2938X adapter for Traxxas® iD® batteries)
2968 LiPo cell voltage checker/balancer (requires #2938X adapter for Traxxas® iD® batteries)
6555 Mount, telemetry expander (fits Slash 4X4, Stampede® 4X4, Rally, Jato®)
6535 Mount, temperature sensor (electric motors)/ wire tie/ thermal pad
6519 Receiver, micro, TQ 2.4GHz (3-channel)
6518 Receiver, micro, TQi 2.4GHz with telemetry (5-channel)
3932 Screws, 3x6mm flat-head machine (hex drive) (6)
6552 Seal kit, expander box (includes o-ring, seals, and silicone grease)
6526 Sensor, auto-detectable, temperature
6527 Sensor, auto-detectable, voltage
6520 Sensor, RPM (long)/ 3x4mm BCS (2)/ 3x4 GS (1)
6521 Sensor, temperature and voltage (long)
2254 Servo case, aluminum (blue-anodized) (middle) (for 2250 servo)
2253 Servo case, aluminum (red-anodized) (middle) (for 2255 servo)
2251 Servo case, plastic (top, middle, bottom)/ gaskets/ hardware (for 2250, 2255 servos)
2075R Servo, digital high-speed, metal gear (ball bearing), waterproof
2075 Servo, digital high-torque (ball bearing), waterproof
2250 Servo, digital high-torque 330 coreless, metal gear (ball bearing), waterproof
2255 Servo, digital high-torque 400 brushless, metal gear (ball bearing), waterproof
2075X Servo, digital high-torque, metal gear (ball bearing), waterproof
6553X Telemetry expander 2.0 and GPS module 2.0, TQi radio system
6550X Telemetry expander 2.0, TQi radio system (for use only with #6551X GPS module)
6551X Telemetry GPS module 2.0, TQi radio system (for use only with #6550X telemetry expander)
6539 Telemetry trigger magnet holder, center differential/ magnet, 5x2mm (1)/ 3x8mm BCS (3)
6538 Telemetry trigger magnet holders, spur gear/ magnet, 5x2mm (1)/ 3x8mm CCS (3)/ 3x10mm CCS (3)
6540 Telemetry trigger magnet, 5X2mm (1)
6509R TQi 2.4 GHz High Output radio system, 2-channel, Traxxas Link™ enabled, TSM (2-ch transmitter, 5-ch micro receiver)
6507R TQi 2.4 GHz High Output radio system, 4-channel with Traxxas Link™ Wireless Module, TSM (4-ch transmitter, 5-ch micro receiver)
6516 Transmitter, TQ 2.4GHz, 2-channel (transmitter only)
6528 Transmitter, TQi Traxxas Link™ enabled, 2.4GHz high output, 2-channel (transmitter only)
6529 Transmitter, TQi Traxxas Link™ enabled, 2.4GHz high output, 3-channel (transmitter only)
6530 Transmitter, TQi Traxxas Link™ enabled, 2.4GHz high output, 4-channel (transmitter only)
6511 Traxxas Link™ Wireless Module

Ready-To-Race Model

67054-1 Stampede® 4X4: 1/10-scale 4WD Monster Truck

Rear Suspension

6823 Bulkhead tie bars, front & rear, aluminum (blue-anodized)
6823G Bulkhead tie bars, front & rear, aluminum (green-anodized)
6823R Bulkhead tie bars, front & rear, aluminum (red-anodized)
6829 Bulkhead, rear
3641A Camber link set (plastic / non-adjustable) (front & rear) (grey)
3641 Camber link set (plastic/ non-adjustable) (front & rear) (black)
3644X Camber links, rear (TUBES blue-anodized, 7075-T6 aluminum, stronger than titanium) (73mm) (2)/ rod ends (4)/ aluminum wrench (1) (#2579 3x15 BCS (4) required for installation)
3644G Camber links, rear (TUBES green-anodized 7075-T6 aluminum, stronger than titanium) (73mm) (2)/ rod ends (4)/ aluminum wrench (1) (#2579 3x15 BCS (4) required for installation)
3644R Camber links, rear (TUBES red-anodized, 7075-T6 aluminum, stronger than titanium) (73mm) (2)/ rod ends (4)/ aluminum wrench (1) (#2579 3x15 BCS (4) required for installation)
1952X Carriers, stub axle (blue-anodized 6061-T6 aluminum) (rear) (2)
1952G Carriers, stub axle (green-anodized 6061-T6 aluminum) (rear) (2)
1952T Carriers, stub axle (orange-anodized 6061-T6 aluminum) (rear) (2)
1952 Carriers, stub axle (rear) (2)
1952A Carriers, stub axle (red-anodized 6061-T6 aluminum) (rear) (2)
6895 Linkage, front sway bar (2) (assembled with rod ends, hollow balls and ball studs)
6897 Linkage, rear sway bar (2) (assembled with rod ends, hollow balls and ball studs)
5529 Shim set, 3x7x1mm (2), 3x6x0.5mm (4), 3x7x2mm (2)/ hollow balls, captured (4)
6838 Shock tower, rear
6838X Shock tower, rear, 7075-T6 aluminum (blue-anodized)
6853A Stub axle assembly, rear, outer, extreme heavy duty (1) (left or right) (assembled with internal-splined half shaft)
6853X Stub axles, rear, heavy duty (2)/pins (2)
6732 Suspension arm guards, front (2)/ guard spacers (2)/ hollow balls (2)/ 3X16mm BCS (8)
3655P Suspension arms, blue, front/rear (left & right), heavy duty (2)
3655R Suspension arms, front/rear (left & right), heavy duty (2)
3655G Suspension arms, green, front/rear (left & right), heavy duty (2)
3655X Suspension arms, left & right
3655T Suspension arms, orange, front/rear (left & right), heavy duty (2)
3655L Suspension arms, red, front/rear (left & right), heavy duty (2)
3655A Suspension arms, white, front/rear (left & right), heavy duty (2)
6834 Suspension pin set, complete (front and rear)
6898 Sway bar kit (front and rear) (includes front and rear sway bars and adjustable linkage)

3644 Turnbuckles, camber link, 39mm (69mm center to center) (assembled with rod ends and hollow balls) (1 left, 1 right)
6896 Wires, sway bar (front & rear, hard & soft) / 3x6 FCS (4)

Shocks (GTR)

7466X Body, GTR long (hard-anodized, PTFE-coated aluminum) (1)
7466 Body, GTR long shock, aluminum (blue-anodized) (PTFE-coated bodies) (1)
7466G Body, GTR long shock, aluminum (green-anodized) (PTFE-coated bodies) (1)
7466A Body, GTR long shock, aluminum (orange-anodized) (PTFE-coated bodies) (1)
7467X Body, GTR xx-long (hard-anodized, PTFE-coated aluminum) (1)
7467 Body, GTR xx-long shock, aluminum (blue-anodized) (PTFE-coated bodies) (1)
7467G Body, GTR xx-long shock, aluminum (green-anodized) (PTFE-coated bodies) (1)
7467A Body, GTR xx-long shock, aluminum (orange-anodized) (PTFE-coated bodies) (1)
7468X Caps & spring retainers, GTR shock (upper cap (2)/ hollow balls (4)/ bottom cap (2)/ upper retainer (2)/ lower retainer (2))
7468 Caps and spring retainers, GTR long/xx-long shock (upper cap (2)/ hollow balls (4)/ bottom cap (2)/ upper retainer (2)/ lower retainer (2))
5475 Multi-tool (plastic)
5158 Nuts, 2.5mm nylon locking (12)
7463 Rebuild kit, GTR long/xx-long shocks (x-rings, bladders, pistons, piston nuts, shock rod ends, hollow balls) (renews 2 shocks)
5469 Rod ends (GTR shocks) (6)
7464T Shaft, GTR long, TiN-coated (2)
7461 Shocks, GTR long blue-anodized, PTFE-coated bodies with TiN shafts (fully assembled, without springs) (2)
7461G Shocks, GTR long green-anodized, PTFE-coated bodies with TiN shafts (fully assembled, without springs) (2)
7461X Shocks, GTR long hard-anodized, PTFE-coated bodies with TiN shafts (assembled) (2) (without springs)
7462 Shocks, GTR xx-long blue-anodized, PTFE-coated bodies with TiN shafts (fully assembled, without springs) (2)
7462G Shocks, GTR xx-long green-anodized, PTFE-coated bodies with TiN shafts (fully assembled, without springs) (2)
7462X Shocks, GTR xx-long hard-anodized, PTFE-coated bodies with TiN shafts (assembled) (2) (without springs)
8459 Spring retainers, lower (captured) (4)/ 2.5x10 CS (4)
7440 Spring, shock, white (GTR long) (0.623 rate orange) (1 pair)
7441 Spring, shock, white (GTR long) (0.653 rate green) (1 pair)
7444 Spring, shock, white (GTR long) (0.767 rate black) (1 pair)
7445 Spring, shock, white (GTR long) (0.810 rate pink) (1 pair)
7448 Spring, shock, white (GTR long) (0.892 rate blue) (1 pair)
7442 Spring, shock, white (GTR xx-long) (0.711 rate orange) (1 pair)
7443 Spring, shock, white (GTR xx-long) (0.762 rate green) (1 pair)
7446 Spring, shock, white (GTR xx-long) (0.874 rate black) (1 pair)
7447 Spring, shock, white (GTR xx-long) (0.884 rate pink) (1 pair)
7449 Spring, shock, white (GTR xx-long) (1.004 rate blue) (1 pair)

Shocks (Pro-level Aluminum)

2664 Big Bore shock cylinder (long) (1)
2666 Big Bore shock cylinder (XX-long) (1)
5862 Big Bore shocks (hard-anodized & PTFE-coated T6 aluminum) (assembled with TiN shafts and springs) (front & rear) (4)
2660 Big Bore shocks (long) (hard-anodized & PTFE-coated T6 aluminum) (assembled with TiN shafts) w/o springs (front) (2)
2662 Big Bore shocks (XX-long) (hard-anodized & PTFE-coated T6 aluminum) (assembled with TiN shafts) w/o springs (rear) (2)
2669 Piston head set (2-hole (2)/ 3-hole (2))/ shock mounting bushings & washers (2) (Big Bore Shocks)
2362 Rebuild kit, Ultra shocks (for 2 shocks)
1942 Rod ends (16 long & 4 short)/ hollow ball connectors (18)/ ball screws (2)
2742X Rod ends, short (6)/ hollow balls (6)
2667 Shock caps, aluminum (Big Bore Shocks) (2)
1664T Shock shafts, hardened steel, titanium nitride coated (long) (2)
2656T Shock shafts, hardened steel, titanium nitride coated (xx-long) (2)
1664 Shock shafts, steel, chrome finish (long) (2)
2656 Shock shafts, steel, chrome finish (xx-long) (2)
1765 Silicone diaphragms (4)
1666 Silicone shock oil (30 wt)
2668 Spring retainers, upper & lower (2)/ spring pre-load spacers: 1mm (4)/ 1.5mm (2)/ 2mm (2)/ 4mm (2)/ 8mm (2) (Big Bore Shocks)
6863 Springs, front (progressive, +10% rate, pink) (2)
6864 Springs, front (progressive, +20% rate, blue) (2)
6862 Springs, front (progressive, -10% rate, green) (2)
6861 Springs, front (progressive, -20% rate, orange) (2)
6857 Springs, front (white) (progressive rate) (2)
5860 Springs, front (white) (progressive rate) (2) (fits #5862 aluminum Big Bore shocks)
6867 Springs, rear (progressive, +10% rate, pink) (2)
6868 Springs, rear (progressive, +20% rate, blue) (2)
6866 Springs, rear (progressive, -10% rate, green) (2)
6865 Springs, rear (progressive, -20% rate, orange) (2)
6858 Springs, rear (white) (progressive rate) (2)
5859 Springs, rear (white) (progressive rate) (2) (fits #5862 aluminum Big Bore shocks)

Shocks (Ultra Shocks)

3642 Attachment screws, shock (3x12mm shoulder screws) (6)
3765A Body, Ultra Shock(s) (long) (grey) (2)
3766A Body, Ultra Shock(s) (XXL) (grey) (2)
2362 Rebuild kit, Ultra shocks (for 2 shocks)
1942 Rod ends (16 long & 4 short)/ hollow ball connectors (18)/ ball screws (2)
2742X Rod ends, short (6)/ hollow balls (6)
3767 Shock caps (2)/ shock bottoms (2)
3767A Shock caps, aluminum (blue-anodized) (4) (fits all Ultra Shocks)
3767G Shock caps, aluminum (green-anodized) (4) (fits all Ultra Shocks)
3767P Shock caps, aluminum (pink-anodized) (4) (fits all Ultra Shocks)
3767X Shock caps, aluminum (red-anodized) (4) (fits all Ultra Shocks)
1664T Shock shafts, hardened steel, titanium nitride coated (long) (2)
2656T Shock shafts, hardened steel, titanium nitride coated (xx-long) (2)
1664 Shock shafts, steel, chrome finish (long) (2)
2656 Shock shafts, steel, chrome finish (xx-long) (2)
1765 Silicone diaphragms (4)
1666 Silicone shock oil (30 wt)
3769 Spring pre-load spacers: 1mm (4)/ 2mm (2)/ 4mm (2)/ 8mm (2)
3768 Spring retainers, upper & lower (2)/ piston head set (2-hole (2)/ 3-hole (2))
3758 Springs, front (black) (2)
3758T Springs, front (blue) (2)
3758A Springs, front (green) (2)
3758P Springs, front (pink) (2)
6863 Springs, front (progressive, +10% rate, pink) (2)
6864 Springs, front (progressive, +20% rate, blue) (2)
6862 Springs, front (progressive, -10% rate, green) (2)
6861 Springs, front (progressive, -20% rate, orange) (2)
3758X Springs, front (white) (2)
6857 Springs, front (white) (progressive rate) (2)
3757 Springs, rear (black) (2)
3757T Springs, rear (blue) (2)
3757A Springs, rear (green) (2)
3757P Springs, rear (pink) (2)
6867 Springs, rear (progressive, +10% rate, pink) (2)
6868 Springs, rear (progressive, +20% rate, blue) (2)
6866 Springs, rear (progressive, -10% rate, green) (2)
6865 Springs, rear (progressive, -20% rate, orange) (2)
3757X Springs, rear (white) (2)
6858 Springs, rear (white) (progressive rate) (2)
4957 Springs, red (for Ultra Shocks only) (2.5 rate) (f/r) (2)
3760 Ultra Shocks (black) (long) (complete w/ spring pre-load spacers & springs) (front) (2)
3762 Ultra Shocks (black) (xx-long) (complete w/ spring pre-load spacers & springs) (rear) (2)
3760A Ultra Shocks (grey) (long) (complete w/ spring pre-load spacers & springs) (2)
3762A Ultra Shocks (grey) (xx-long) (complete w/ spring pre-load spacers & springs) (rear) (2)

Slipper Clutch Components

6893G Bearing adapter, 6061-T6 aluminum (green-anodized) (1)/ 10x15x4mm ball bearing (black rubber sealed) (1) (for slipper shaft)
6893X Bearing adapter, 6160-T6 aluminum (blue-anodized) (1)/10x15x4mm ball bearing (blue rubber sealed) (1) (for slipper shaft)
6814 Differential kit, center (complete)
6888 Drive hub, center, rear (1)/ 4x3 GS (1)
6888X Drive hub, front, hardened steel (1)/ screw pin (1)
6883 Gear set, center differential (output gears (2)/ spider gears (2)/ spider gear shaft)
6884 Housing, center differential/ x-ring gaskets (2)/ ring gear gasket/ bushings (2)/ 5x10x0.5 TW (2)/ CCS 2.5x8 (4)
6893 Input shaft (slipper shaft)/ bearing adapter (1)/pin (1)

STAMPEDE 4X4 (67054-1)

5352R **Rebuild kit (heavy duty), slipper clutch (steel disc/ aluminum friction pads (3)/ spring (1)/ 2x9.8mm pin/ 5x8mm MW/ 5.0mm NL (1)/ 4.0mm NL (1))**
5352X **Rebuild kit, slipper clutch (steel disc/ friction pads (3)/ spring (2)/ 2x9.8mm pin/ 5x8mm MW/ 5.0mm NL (1)/ 4.0mm NL (1))**
5552X **Rebuild kit, slipper clutch (steel disc/ friction pads (3)/ spring (2)/ pin/ 4.0mm NL (1)/ 5.0mm NL (1))**
2554 Screws, 3x6mm cap-head machine (hex drive) (6)
6878 Slipper clutch, complete
5556 Slipper pressure plate & hub (aluminum alloy)
5351 **Slipper pressure plate and hub (alloy)**

Spur Gears & Pinion Gears

6747 **Gear, 11-T pinion (32-p) (steel)/ set screw**
3942X **Gear, 12-T pinion (32-p), heavy duty (machined, hardened steel)/ set screw**
3943X **Gear, 13-T pinion (32-p), heavy duty (machined, hardened steel)/ set screw**
3944X **Gear, 14-T pinion (32-p), heavy duty (machined, hardened steel)/ set screw**
3945X **Gear, 15-T pinion (32-p), heavy duty (machined, hardened steel)/ set screw**
3946X **Gear, 16-T pinion (32-p), heavy duty (machined, hardened steel)/ set screw**
3947X **Gear, 17-T pinion (32-p), heavy duty (machined, hardened steel)/ set screw**
3948X **Gear, 18-T pinion (32-p), heavy duty (machined, hardened steel)/ set screw**
3949X **Gear, 19-T pinion (32-p), heavy duty (machined, hardened steel)/ set screw**
3950X **Gear, 20-T pinion (32-p), heavy duty (machined, hardened steel)/ set screw**
3951X **Gear, 21-T pinion (32-p), heavy duty (machined, hardened steel)/ set screw**
3952X **Gear, 22-T pinion (32-p), heavy duty (machined, hardened steel)/ set screw**
6745 Gear, 9-T pinion (32-p) (steel)/ set screw
6842 **Spur gear, 50-tooth (0.8 metric pitch, compatible with 32-pitch)**
6842R **Spur gear, 50-tooth (0.8 metric pitch, compatible with 32-pitch) (for center differential)**
6843 **Spur gear, 52-tooth (0.8 metric pitch, compatible with 32-pitch)**
6843R **Spur gear, 52-tooth (0.8 metric pitch, compatible with 32-pitch) (for center differential)**
3956 Spur gear, 54-tooth (0.8 metric pitch, compatible with 32-pitch)
3956R **Spur gear, 54-tooth (0.8 metric pitch, compatible with 32-pitch) (requires #6814 center differential)**
3956X **Spur gear, steel, 54-tooth (0.8 metric pitch, compatible with 32-pitch) (requires #6780 center differential)**

Steering Components

1552 Screws, 3x8mm cap-head machine (hex drive) (6)/washers (6)/ wrench
5114 **Ball bearings, blue rubber sealed (5x8x2.5mm) (2)**
2545 Bellcrank bushings (plastic) (5x8x2.5mm) (4)
6846 Linkage, steering (3x20mm turnbuckle) (1)/ rod ends (2)/ hollow balls (2)
2742 Rod ends, long (6)/ hollow ball connectors (6)
6845X Steering bellcranks/ servo saver/ servo saver spring/ servo spring retainer/servo horn, steering
6742X **Toe links (TUBES blue-anodized, 7075-T6 aluminum, stronger than titanium) (87mm) (2)/ rod ends (4)/ aluminum wrench (1)**
6742G **Toe links (TUBES green-anodized, 7075-T6 aluminum, stronger than titanium) (87mm) (2)/ rod ends (4)/ aluminum wrench (1)**
6742R **Toe links (TUBES red-anodized, 7075-T6 aluminum, stronger than titanium) (87mm) (2)/ rod ends (4)/ aluminum wrench (1)**
2746 Washers, 3x6mm metal (12)

Suspension Linkage

3641A Camber link set (plastic / non-adjustable) (front & rear) (grey)
3641 **Camber link set (plastic/ non-adjustable) (front & rear) (black)**
3643X **Camber links, front (TUBES blue-anodized, 7075-T6 aluminum, stronger than titanium) (83mm) (2)/ rod ends (4)/ aluminum wrench (1) (#2579 3x15 BCS (4) required for installation)**
3643G **Camber links, front (TUBES green-anodized, 7075-T6 aluminum, stronger than titanium) (83mm) (2)/ rod ends (4)/ aluminum wrench (1) (#2579 3x15 BCS (4) required for installation)**
3643R **Camber links, front (TUBES red-anodized, 7075-T6 aluminum, stronger than titanium) (83mm) (2)/ rod ends (4)/ aluminum wrench (1) (#2579 3x15 BCS (4) required for installation)**
3644X **Camber links, rear (TUBES blue-anodized, 7075-T6 aluminum, stronger than titanium) (73mm) (2)/ rod ends (4)/ aluminum wrench (1) (#2579 3x15 BCS (4) required for installation)**
3644G **Camber links, rear (TUBES green-anodized 7075-T6 aluminum, stronger than titanium) (73mm) (2)/ rod ends (4)/ aluminum wrench (1) (#2579 3x15 BCS (4) required for installation)**
3644R **Camber links, rear (TUBES red-anodized, 7075-T6 aluminum, stronger than titanium) (73mm) (2)/ rod ends (4)/ aluminum wrench (1) (#2579 3x15 BCS (4) required for installation)**
5525 **Rod ends (12)/ hollow balls (12)**
2742 Rod ends, long (6)/ hollow ball connectors (6)
5529 Shim set, 3x7x1mm (2), 3x6x0.5mm (4), 3x7x2mm (2)/ hollow balls, captured (4)
6834 Suspension pin set, complete (front and rear)
2537 **Threaded rods (20/25/44mm 1 ea.)/ (1) 12mm set screw**
2335 Turnbuckles (72mm) (Tie rods or optional rear camber rods) (2)
3644 **Turnbuckles, camber link, 39mm (69mm center to center) (assembled with rod ends and hollow balls) (1 left, 1 right)**
3643 **Turnbuckles, camber link, 49mm (82mm center to center) (assembled with rod ends and hollow balls) (1 left, 1 right)**
5539 **Turnbuckles, camber links, 58mm (assembled with rod ends and hollow balls) (2)**

Team Traxxas Items

2514 **Decal sheet, racing sponsors**
6160X **DVD, Maxx® Power! Full Throttle Action (sleeve)**
9950 **Official Team Traxxas® racing decal set (flag logo/ 6-color)**
9909 **Traxxas® racing banner, red & black (3x7 feet)**

Tires & Wheels

5116 Ball bearings, blue rubber sealed (5x11x4mm) (2)
5854 **Hub retainer, 17mm hubs, M4 X 0.7 (4) (use with #5853X, #6856X, #6469)**
3647 Nuts, 4mm flanged nylon locking (steel, serrated) (8)
1747R **Nuts, aluminum, flanged, serrated (4mm) (blue-anodized) (4)**
1747G **Nuts, aluminum, flanged, serrated (4mm) (green-anodized) (4)**
1747P **Nuts, aluminum, flanged, serrated (4mm) (pink-anodized) (4)**
1985 PTFE-coated washers, 5x8x0.5mm (20) (use with ball bearings)
1647 Silicone grease
2754 Stub axle pins (4)
4175 **Tires & wheels, assembled, glued (2.8") (All-Star black chrome wheels, paddle tires, foam inserts) (nitro rear/ 4WD electric front/rear) (2) (TSM rated)**
3669A **Tires & wheels, assembled, glued (2.8") (All-Star black chrome wheels, Talon tires, foam inserts) (front/rear, Stampede 4x4) (2)**
3669 **Tires & wheels, assembled, glued (2.8") (All-Star chrome wheels, Talon tires, foam inserts) (front/rear, Stampede 4x4) (2)**
6792 **Tires & wheels, assembled, glued (black 2.8" wheels, Sledgehammer™ tires, foam inserts) (2) (TSM® rated)**
6771 Tires and wheels, assembled, glued 2.8" (All-Star chrome wheels, Maxx® tires, foam inserts) (2)
6770 Tires, Maxx® 2.8" (2)/ foam inserts (2)
3671 **Tires, Talon 2.8" (2)/ foam inserts (2)**
1654 Wheel hubs, hex (rear) (2)/ stub axle pins (2)
1654X **Wheel hubs, hex (blue-anodized, lightweight aluminum) (2)/ axle pins(4)**
6856X **Wheel hubs, splined, 17mm, short (4)/ wheel nuts, splined, 17mm (4) (blue-anodized)/ hub retainer M4 X 0.7 (4)/ axle pin (4)/ wrench, 5mm**
5353 **Wheel nuts, splined, 17mm (blue-anodized) (4)**
5480X **Wheel wrench, splined, 17mm**
5576A **Wheels, All-Star 2.8" (black chrome) (front/rear, Stampede 4x4) (2)**
5576 Wheels, All-Star 2.8" (chrome) (Stampede 4x4 front or rear) (2)
5572 **Wheels, Twin-Spoke 2.8" (chrome) (front/rear, Stampede 4x4) (2)**

Traxxas Tools

3433X **Body reamer (aluminum handle)**
3433 **Body reamer (plastic handle)**
3436 **Cap, body reamer**
3432 **Scissors, curved tip**
3431 **Scissors, straight tip**
8712 **Speed Bit Essentials Set, hex and nut driver, 7-piece, includes premium handle (medium), travel pouch, hex drivers (straight: 1.5mm, 2.0mm, 2.5mm) and nut drivers (5.0mm, 5.5mm, 7.0mm, and 8.0mm), 1/4" drive**
8721 **Speed bit handle, medium (one piece)**
8720 **Speed bit handle, premium, large (rubber overmold)**
8722 **Speed bit handle, premium, medium (rubber overmold)**
8710 **Speed Bit Master Set, hex and nut driver, 13-piece, includes premium handle (medium), travel pouch, hex drivers (straight: 1.5mm, 2.0mm, 2.5mm, 3.0mm), (ball-end: 2.0mm, 2.5mm, 3.0mm), and nut drivers (4.00mm, 4.50mm, 5.00mm, 5.50mm, 7.00mm, 8.00mm),**
8711 **Speed Bit Master Set, hex driver, 7-piece straight and ball end, includes premium handle (medium), travel pouch, hex drivers (straight: 1.5mm, 2.0mm, 2.5mm, 3.0mm) (ball end: 2.0mm, 2.5mm, 3.0mm), 1/4" drive**

REV. 201002 1243

8719	**Speed Bit Master Set, nut driver, 6-piece, includes premium handle (medium), travel pouch, and nut drivers (4.0mm, 4.5mm, 5.0mm, 5.5mm, 7.0mm, 8.0mm), 1/4" drive**
8716	**Speed Bit Set, hex driver, 2-piece ball-end (2.0mm, 2.5mm), 1/4" drive**
8716X	**Speed Bit Set, hex driver, 3-piece ball-end (2.0mm, 2.5mm, 3.0mm), 1/4" drive**
8715	**Speed Bit Set, hex driver, 3-piece straight (1.5mm, 2.0mm, 2.5mm), 1/4" drive**
8715X	**Speed Bit Set, hex driver, 4-piece straight (1.5mm, 2.0mm, 2.5mm, 3.0mm), 1/4" drive**
3415	**Tool set with pouch (includes 1.5mm, 2.0mm, 2.5mm, 3.0mm, 3.5mm, 4mm drivers/ 4mm, 5mm, 5.5mm, 7mm and 8mm nut drivers/ 2mm, 4mm, and 5mm slotted screwdrivers/ #00 Phillips, #0 Phillips, and #1 Phillips screwdrivers/ 4mm and 8mm wrench/ driver handle**

Turnbuckles & Threaded Rods

3643X	**Camber links, front (TUBES blue-anodized, 7075-T6 aluminum, stronger than titanium) (83mm) (2)/ rod ends (4)/ aluminum wrench (1) (#2579 3x15 BCS (4) required for installation)**
3643G	**Camber links, front (TUBES green-anodized, 7075-T6 aluminum, stronger than titanium) (83mm) (2)/ rod ends (4)/ aluminum wrench (1) (#2579 3x15 BCS (4) required for installation)**
3643R	**Camber links, front (TUBES red-anodized, 7075-T6 aluminum, stronger than titanium) (83mm) (2)/ rod ends (4)/ aluminum wrench (1) (#2579 3x15 BCS (4) required for installation)**
3644X	**Camber links, rear (TUBES blue-anodized, 7075-T6 aluminum, stronger than titanium) (73mm) (2)/ rod ends (4)/ aluminum wrench (1) (#2579 3x15 BCS (4) required for installation)**
3644G	**Camber links, rear (TUBES green-anodized 7075-T6 aluminum, stronger than titanium) (73mm) (2)/ rod ends (4)/ aluminum wrench (1) (#2579 3x15 BCS (4) required for installation)**
3644R	**Camber links, rear (TUBES red-anodized, 7075-T6 aluminum, stronger than titanium) (73mm) (2)/ rod ends (4)/ aluminum wrench (1) (#2579 3x15 BCS (4) required for installation)**
5525	**Rod ends (12)/ hollow balls (12)**
2742	Rod ends, long (6)/ hollow ball connectors (6)
5529	Shim set, 3x7x1mm (2), 3x6x0.5mm (4), 3x7x2mm (2)/ hollow balls, captured (4)
2335	Turnbuckles (72mm) (Tie rods or optional rear camber rods) (2)
3644	**Turnbuckles, camber link, 39mm (69mm center to center) (assembled with rod ends and hollow balls) (1 left, 1 right)**
3643	**Turnbuckles, camber link, 49mm (82mm center to center) (assembled with rod ends and hollow balls) (1 left, 1 right)**
5539	**Turnbuckles, camber links, 58mm (assembled with rod ends and hollow balls) (2)**

If you have questions or need technical assistance, call Traxxas at:

1-888-TRAXXAS

(1-888-872-9927) (U.S. residents only)

For orders, calls outside the U.S., and other information, call 972-549-3000, or fax to 972-549-3011 e-mail Traxxas at support@Traxxas.com

TRAXXAS.com

REV. 201002 1243

RUSTLER 4X4

MODEL 67064-1

1/10 SCALE 4WD
STADIUM TRUCK



WATERPROOF XL-5 ESC AND
TITAN 12T MOTOR

TQ 2.4GHz TRANSMITTER

HIGH-CAPACITY 3000 MAH
7-CELL BATTERY AND
INCLUDED DC CHARGER

A NEW BREED OF STADIUM TRUCK!

Rustler 4X4 infuses the speed and agility of the number-one-selling Rustler with 4-wheel drive performance, increased durability, and even more fun! Beneath the reinforced clipless body, the all-new chassis sits lower, wider, and longer than before for increased stability. The waterproof XL-5 electronic speed control and Titan® motor deliver high-octane horsepower and all-weather fun. Large Talon™ EXT tires provide versatile grip on any terrain, from backyard trails to concrete skate parks. Rustler 4X4 destroys convention to become the new standard for 4x4 stadium trucks!

*With 6S LiPo battery and optional gearing

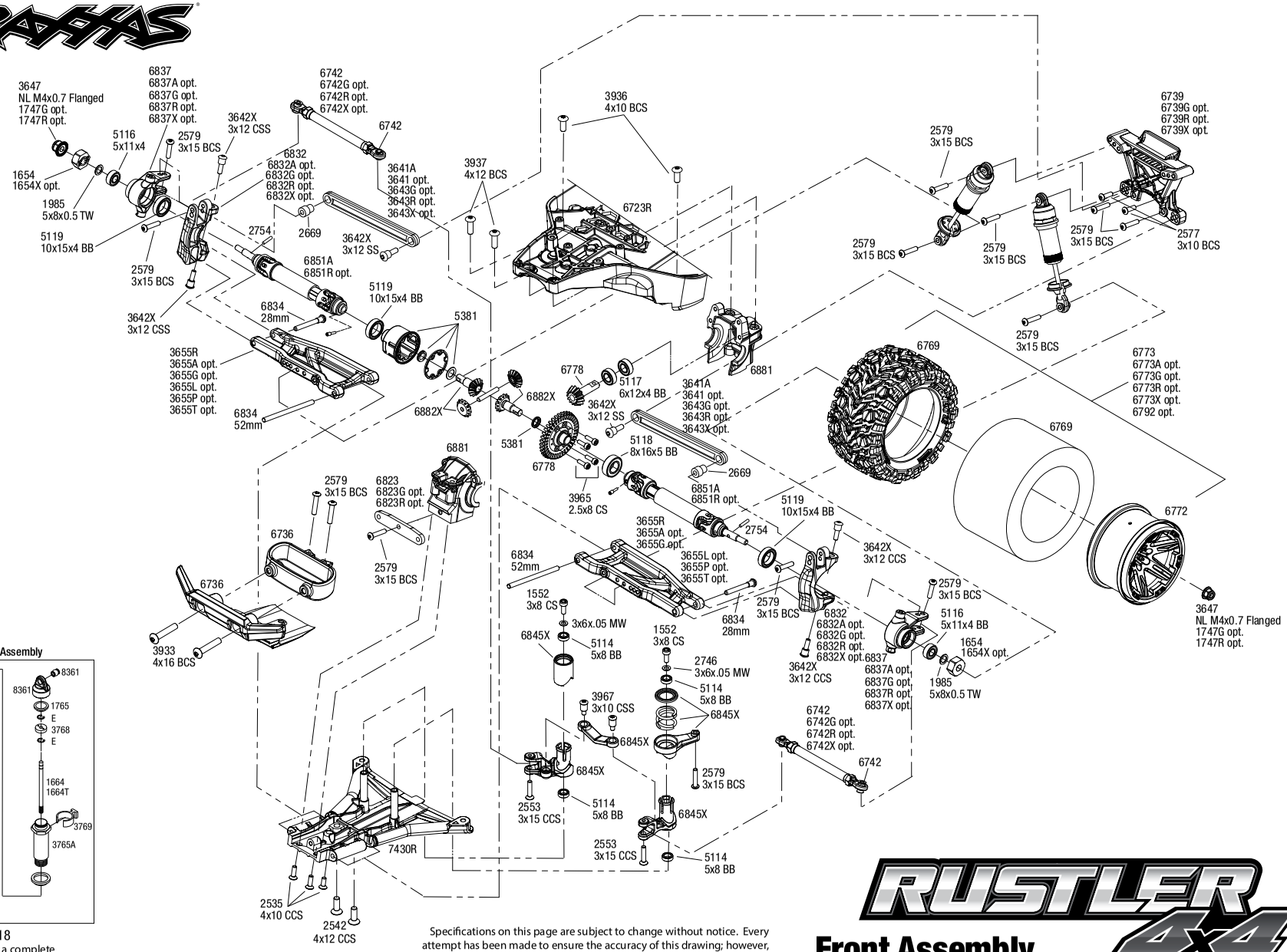

Shock Assembly

REV 200922-R18
See Parts List for a complete listing of optional accessories.

Specifications on this page are subject to change without notice. Every attempt has been made to ensure the accuracy of this drawing; however, Traxxas cannot be held responsible for typographical or other errors.

RUSTLER 4X4

Front Assembly

RUSTLER 4X4 (67064-1)

Chassis Assembly

See Parts List for a complete listing of optional accessories.

REV 200922-R18

Specifications on this page are subject to change without notice. Every attempt has been made to ensure the accuracy of this drawing; however, Traxxas cannot be held responsible for typographical or other errors.

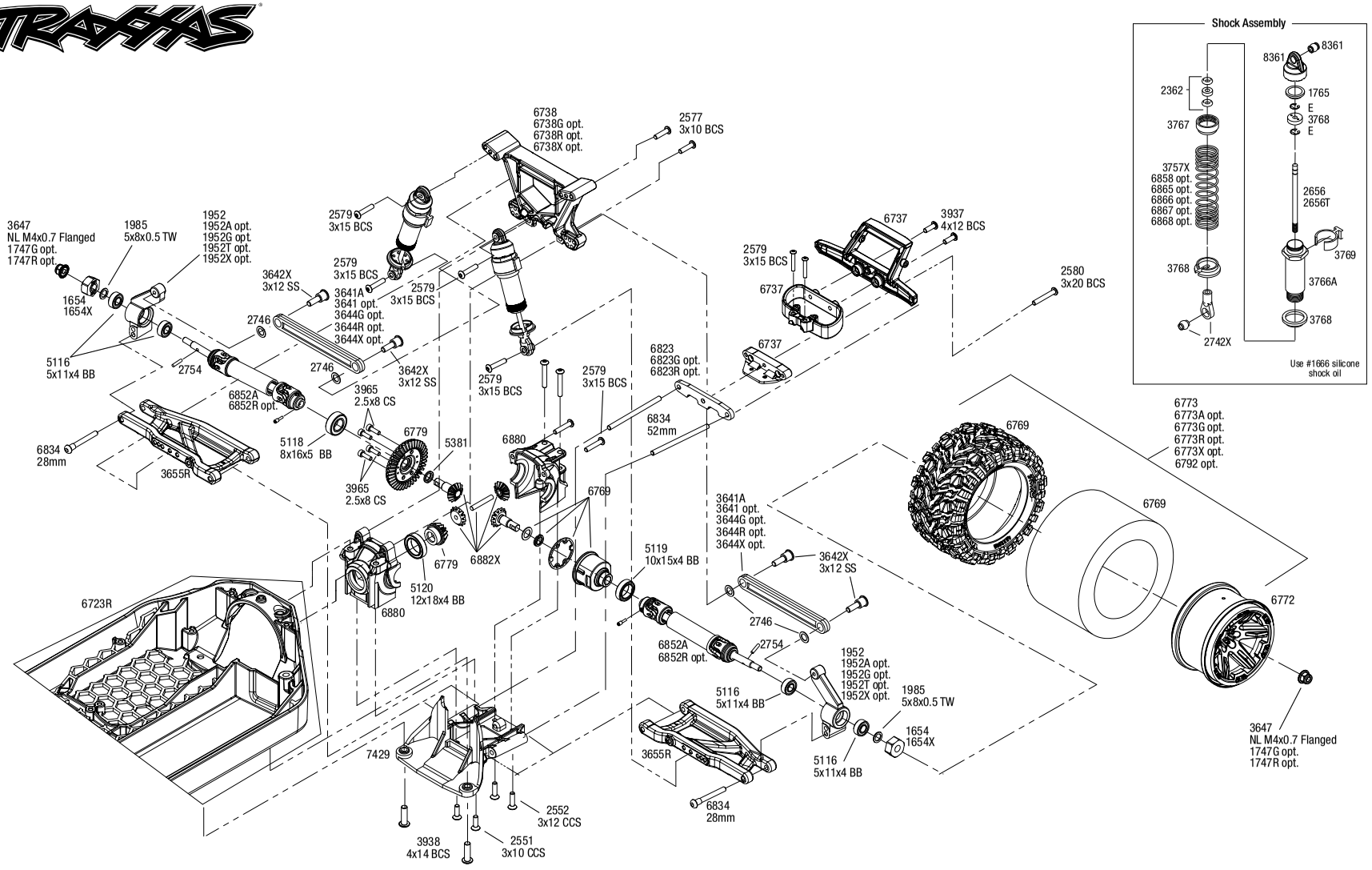

RUSTLER 4x4

Rear Assembly

See Parts List for a complete listing of optional accessories.

REV 200922-R18

Specifications on this page are subject to change without notice. Every attempt has been made to ensure the accuracy of this drawing; however, Traxxas cannot be held responsible for typographical or other errors.

RUSTLER 4X4 (67064-1)

Transmission Assembly

REV 200922-R18

Specifications on this page are subject to change without notice. Every attempt has been made to ensure the accuracy of this drawing; however, Traxxas cannot be held responsible for typographical or other errors.

See Parts List for a complete listing of optional accessories.

Questions? **Call toll-free, 1-888-TRAXXAS**

Driveshaft Assembly

Driveshafts

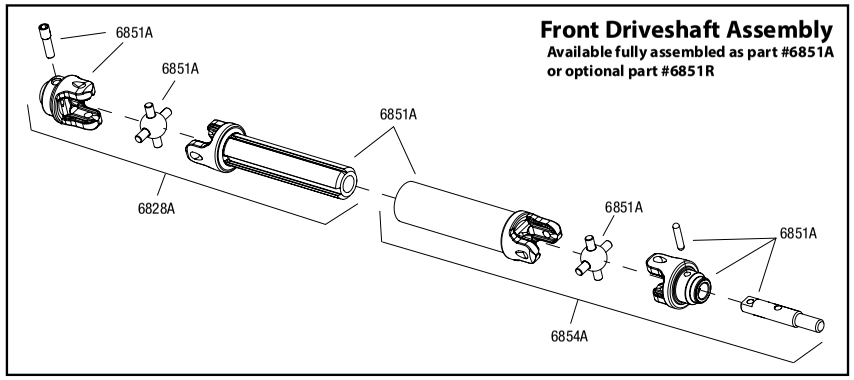

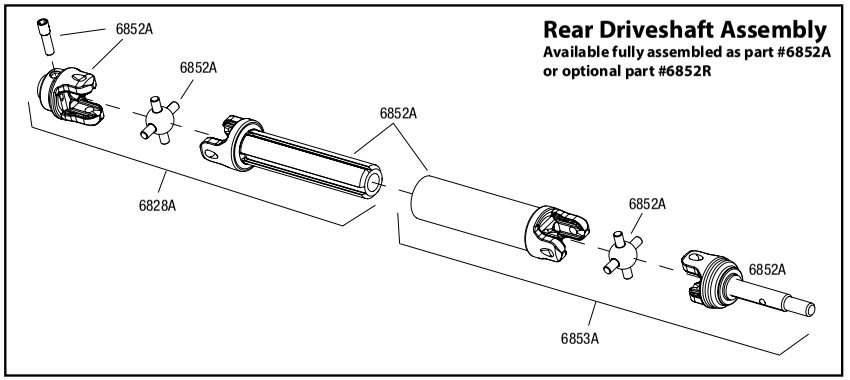

Modular Assembly

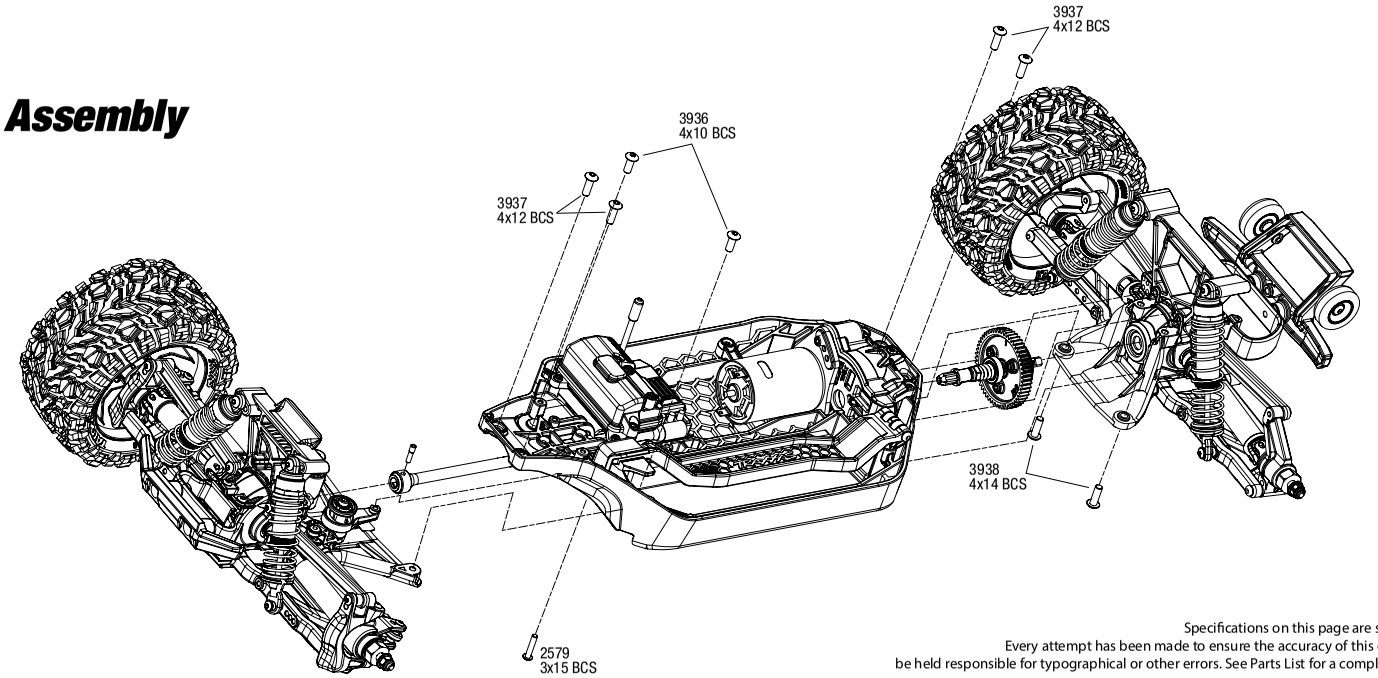

REV 200922-R18

Specifications on this page are subject to change without notice.
Every attempt has been made to ensure the accuracy of this drawing, however Traxxas cannot be held responsible for typographical or other errors. See Parts List for a complete listing of optional accessories.

RUSTLER 4X4

Body Assembly

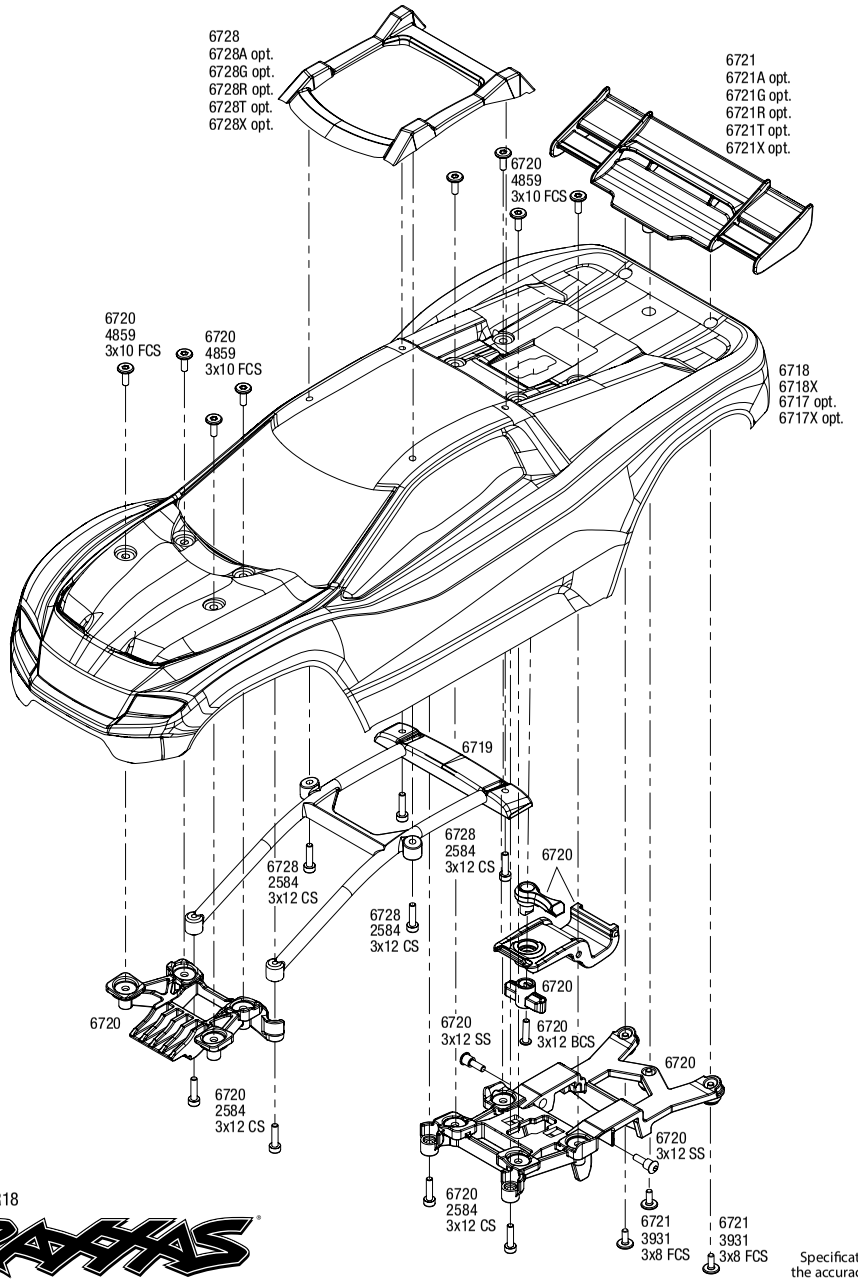

Completed Assembly (view from bottom)

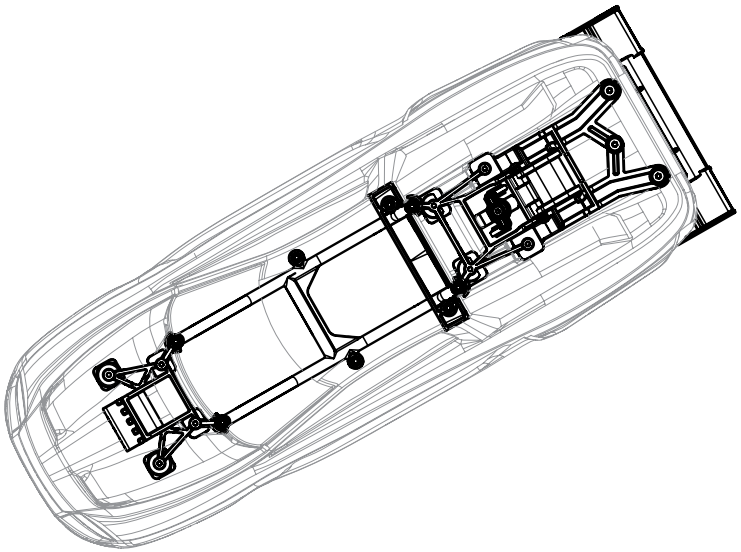

REV 200922-R18

TRAXXAS

Specifications on this page are subject to change without notice. Every attempt has been made to ensure the accuracy of this drawing; however, Traxxas cannot be held responsible for typographical or other errors.

See Parts List for a complete listing of optional accessories.

PARTS SHOWN IN BOLD ARE OPTIONAL ACCESSORIES.

Part categories and individual part listings are arranged alphabetically.

Bearings & Bushings

4607 **Ball bearings (5x11x4mm) (8)**
4612 **Ball bearings (10x15x4mm) (2)**
2728 **Ball bearings (5x8x2.5mm) (2)**
5119A Ball bearings, black rubber sealed (10x15x4mm) (2)
5119 Ball bearings, blue rubber sealed (10x15x4mm) (2)
5120 Ball bearings, blue rubber sealed (12x18x4mm) (2)
5116 Ball bearings, blue rubber sealed (5x11x4mm) (2)
5114 Ball bearings, blue rubber sealed (5x8x2.5mm) (2)
5117 Ball bearings, blue rubber sealed (6x12x4mm) (2)
5118 Ball bearings, blue rubber sealed (8x16x5mm) (2)
1985 PTFE-coated washers, 5x8x0.5mm (20) (use with ball bearings)

Body & Accessories

1926 Antenna caps, vinyl (2)/ antenna spool
1726 Antenna, tube (1)/ vinyl antenna cap (1)/ wire retainer (1)
6720 Body mounts, front & rear/ 3x12mm CS (4)/ 3x12mm shoulder screw (2)/ 3x10mm flat-head machine screw (8)/ 3x12mm BCS (1)
6710 **Body reinforcement set (fits #6717 body)**
6719 Body support/ 3x12mm CS (4)
6717 **Body, Rustler® 4X4 (clear, requires painting)/ window, grille, lights decal sheet**
6718X Body, Rustler® 4X4, blue/ window, grille, lights decal sheet (assembled with front & rear body mounts and rear body support for clipless mounting)
6718 Body, Rustler® 4X4, red/ window, grille, lights decal sheet (assembled with front & rear body mounts and rear body support for clipless mounting)
6717X **Body, Rustler® 4X4, silver/ window, grille, lights decal sheet (assembled with front & rear body mounts and rear body support for clipless mounting)**
2514 **Decal sheet, racing sponsors**
9950 **Official Team Traxxas® racing decal set (flag logo/ 6-color)**
6728X **Skid plate, roof (body) (blue)/ 3x12mm CS (4)**
6728G **Skid plate, roof (body) (green)/ 3x12 CS (4)**
6728T **Skid plate, roof (body) (orange)/ 3x12 CS (4)**
6728R **Skid plate, roof (body) (red)/ 3x12mm CS (4)**
6728A **Skid plate, roof (body) (white)/ 3x12 CS (4)**
6728 Skid plate, roof (body)/ 3x12mm CS (4)
6721 Wing, Rustler® 4X4 (black)/ 3x8mm FCS (3)
6721X **Wing, Rustler® 4X4 (blue)/ 3x8 FCS (3)**
6721G **Wing, Rustler® 4X4 (green)/ 3x8 FCS (3)**
6721T **Wing, Rustler® 4X4 (orange)/ 3x8 FCS (3)**
6721R **Wing, Rustler® 4X4 (red)/ 3x8 FCS (3)**
6721A **Wing, Rustler® 4X4 (white)/ 3x8 FCS (3)**

Center Driveline

5119A Ball bearings, black rubber sealed (10x15x4mm) (2)
5119 Ball bearings, blue rubber sealed (10x15x4mm) (2)
5120 Ball bearings, blue rubber sealed (12x18x4mm) (2)
5116 Ball bearings, blue rubber sealed (5x11x4mm) (2)
5117 Ball bearings, blue rubber sealed (6x12x4mm) (2)
6893G **Bearing adapter, 6061-T6 aluminum (green-anodized) (1)/ 10x15x4mm ball bearing (black rubber sealed) (1) (for slipper shaft)**
6893X **Bearing adapter, 6160-T6 aluminum (blue-anodized) (1)/10x15x4mm ball bearing (blue rubber sealed) (1) (for slipper shaft)**
6741 Cover, center driveshaft (clear)
7477 Cover, gear/ wire retainer
6814 Differential kit, center (complete)
6888 Drive hub, center, rear (1)/ 4x3 GS (1)
6888X Drive hub, front, hardened steel (1)/ screw pin (1)
6765 **Driveshaft, center, 6061-T6 aluminum (blue-anodized) (189mm)**
6765G **Driveshaft, center, 6061-T6 aluminum (green-anodized) (189mm)**
6765A **Driveshaft, center, 6061-T6 aluminum (orange-anodized) (189mm)**
6765R **Driveshaft, center, 6061-T6 aluminum (red-anodized) (189mm)**
6767 Driveshaft, center, plastic, (black)/ screw pin
6883 **Gear set, center differential (output gears (2)/ spider gears (2)/ spider gear shaft)**
5148 Grease, white lithium
6884 **Housing, center differential/ x-ring gaskets (2)/ ring gear gasket/ bushings (2)/ 5x10x0.5 TW (2)/ CCS 2.5x8 (4)**
6893 Input shaft (slipper shaft)/ bearing adapter (1)/pin (1)
7460A Motor mount (assembled with 3x6 flat-head machine screw)/ 3.0mm NL (1)
7460R **Motor mount, 6061-T6 aluminum (blue-anodized)**
7490 Plate, motor
7490G **Plate, motor, green**
7490A **Plate, motor, orange**
7490R **Plate, motor, red**
5352R Rebuild kit (heavy duty), slipper clutch (steel disc/ aluminum friction pads (3)/ spring (1)/ 2x9.8mm pin/ 5x8mm MW/ 5.0mm NL (1)/ 4.0mm NL (1))
5352X **Rebuild kit, slipper clutch (steel disc/ friction pads (3)/ spring (2)/ 2x9.8mm pin/ 5x8mm MW/ 5.0mm NL (1)/ 4.0mm NL (1))**
5552X Rebuild kit, slipper clutch (steel disc/ friction pads (3)/ spring (2)/ pin/ 4.0mm NL (1)/ 5.0mm NL (1))
2575 Screws, 3x6mm button-head machine (hex drive) (6)
2554 Screws, 3x6mm cap-head machine (hex drive) (6)
3932 Screws, 3x6mm flat-head machine (hex drive) (6)
1647 Silicone grease
6878 Slipper clutch, complete
5556 **Slipper pressure plate & hub (aluminum alloy)**
5351 Slipper pressure plate and hub (alloy)

Chassis & Attachments

6726X Battery hold-down (3)/ battery clip/ hold-down post/ screw pin/ pivot post screw
6724 Box, receiver (sealed)/ foam pad/ 2.5x8mm CS (4)/ 3x10mm CS (2)
6736 Bumper, front/ bumper support
6737 Bumper, rear/ bumper mount, rear
6723R Chassis (162mm long battery compartment) (fits flat style battery packs) (use only with #7430R front bulkhead & #6726X battery hold-down)
6730X **Chassis brace kit, blue (fits Rustler® 4X4 or Slash 4X4 models equipped with Low-CG chassis)**
6730G **Chassis brace kit, green (fits Rustler® 4X4 or Slash 4X4 models equipped with Low-CG chassis)**
6730A **Chassis brace kit, orange (fits Rustler® 4X4 or Slash 4X4 models equipped with Low-CG chassis)**
6730R **Chassis brace kit, red (fits Rustler® 4X4 or Slash 4X4 models equipped with Low-CG chassis)**
6725 **Hold down, battery (for use with 30mm height and shorter battery packs)**
6776 **Wheelie bar**

Differential Components

5119 Ball bearings, blue rubber sealed (10x15x4mm) (2)
5117 Ball bearings, blue rubber sealed (6x12x4mm) (2)
5118 Ball bearings, blue rubber sealed (8x16x5mm) (2)
5381 Carrier, differential/ x-ring gaskets (2)/ ring gear gasket/ 6x10x0.5 TW
6780 **Differential kit, center (complete)**
5136X **Differential oil kit (1 each: 10K, 30K, 50K weights)**
6783 **Gear set, center differential (output gears (2)/ spider gears (4)/ spider gear shaft (2))**
6882X Gear set, differential (output gears (2)/ spider gears (2)/ spider gear shaft, carrier support)
6781 **Housing, center differential (aluminum)/ x-ring gaskets (2)/ ring gear gasket/ bushings (2)/ 5x10x0.5mm PTFE-coated washers (2)/ 2.5x8 CCS (4)**
6881 Housings, differential, front
6880 Housings, differential, rear
6782 **Output gears, center differential, hardened steel (2)**
5379X **Ring gear, differential/ pinion gear, differential**
6778 Ring gear, differential/ pinion gear, differential (12/47 ratio) (front)
6779 Ring gear, differential/ pinion gear, differential (12/47 ratio) (rear)
5379R **Ring gear, differential/ pinion gear, differential (machined, spiral cut) (front)**
6879R **Ring gear, differential/ pinion gear, differential (machined, spiral cut) (rear)**
6879 **Ring gear, differential/ pinion gear, differential (rear)**
3965 Screws, 2.5x8mm cap-head machine (6)
1647 Silicone grease

Driveline Components

5119A Ball bearings, black rubber sealed (10x15x4mm) (2)
5119 Ball bearings, blue rubber sealed (10x15x4mm) (2)
5116 Ball bearings, blue rubber sealed (5x11x4mm) (2)
9059X **Cross pin (2)/ drive pin (2) (repairs 2 axle shafts)**
6758 **Differential output shaft (for steel constant-velocity driveshafts) (2)**
9057X **Differential output shafts, steel-splined constant-velocity (2)**

RUSTLER 4X4 (67064-1)

6828A **Differential output yoke assembly, extreme heavy duty (2) (left or right, front or rear) (assembled with external-splined half shaft)**
6851A Driveshaft assembly, front, extreme heavy duty (1) (left or right) (fully assembled, ready to install)/ screw pin (1)
6852A Driveshaft assembly, rear, extreme heavy duty (1) (left or right) (fully assembled, ready to install)/ screw pin (1)
6765 **Driveshaft, center, 6061-T6 aluminum (blue-anodized) (189mm)**
6765G **Driveshaft, center, 6061-T6 aluminum (green-anodized) (189mm)**
6765A **Driveshaft, center, 6061-T6 aluminum (orange-anodized) (189mm)**
6765R **Driveshaft, center, 6061-T6 aluminum (red-anodized) (189mm)**
6767 Driveshaft, center, plastic, (black)/ screw pin
6851R **Driveshafts, front, steel-spline constant-velocity (complete assembly) (2)**
9051X **Driveshafts, front, steel-spline constant-velocity (complete assembly) (2)**
6852R **Driveshafts, rear, steel-spline constant-velocity (complete assembly) (2)**
9052X **Driveshafts, rear, steel-spline constant-velocity (complete assembly) (2)**
9055X **Half shaft, external splined (steel-spline constant velocity) (1)**
6750 **Half shaft, external splined (steel-spline constant-velocity) (1)**
9056X **Half shaft, internal splined (steel-spline constant velocity) (1)**
6751 **Half shaft, internal splined (steel-spline constant-velocity) (1)**
6757 **Rebuild kit, steel-splined constant-velocity driveshafts (includes pins, dustboots, lube, and hardware)**
9058X **Rebuild kit, steel-splined constant-velocity driveshafts (includes pins, lube, and hardware for two axle shafts)**
6854A **Stub axle assembly, front, outer, extreme heavy duty (1) (left or right) (assembled with internal-splined half shaft)**
6853A **Stub axle assembly, rear, outer, extreme heavy duty (1) (left or right) (assembled with internal-splined half shaft)**
6754 **Stub axle, front, 5mm (steel-splined constant-velocity driveshaft) (1)**
9054X **Stub axle, front, steel-splined constant velocity (1)**
6753 **Stub axle, rear, 5mm (steel-splined constant-velocity driveshaft) (1)**
9053X **Stub axle, rear, steel-splined constant velocity (1)**

Front Suspension & Steering

2728 **Ball bearings (5x8x2.5mm) (2)**
5114 Ball bearings, blue rubber sealed (5x8x2.5mm) (2)
6823 Bulkhead tie bars, front & rear, aluminum (blue-anodized)
6823G **Bulkhead tie bars, front & rear, aluminum (green-anodized)**
6823R **Bulkhead tie bars, front & rear, aluminum (red-anodized)**
7430R Bulkhead, front (for use only with #6723R chassis)
3641A Camber link set (plastic / non-adjustable) (front & rear) (grey)
3641 **Camber link set (plastic/ non-adjustable) (front & rear) (black)**
3643X **Camber links, front (TUBES blue-anodized, 7075-T6 aluminum, stronger than titanium) (83mm) (2)/ rod ends (4)/ aluminum wrench (1) (#2579 3x15 BCS (4) required for installation)**
3643G **Camber links, front (TUBES green-anodized, 7075-T6 aluminum, stronger than titanium) (83mm) (2)/ rod ends (4)/ aluminum wrench (1) (#2579 3x15 BCS (4) required for installation)**
3643R **Camber links, front (TUBES red-anodized, 7075-T6 aluminum, stronger than titanium) (83mm) (2)/ rod ends (4)/ aluminum wrench (1) (#2579 3x15 BCS (4) required for installation)**
6832X **Caster blocks (c-hubs), 6061-T6 aluminum (blue-anodized), left & right**
6832G **Caster blocks (c-hubs), 6061-T6 aluminum (green-anodized), left & right**
6832A **Caster blocks (c-hubs), 6061-T6 aluminum (orange-anodized), left & right**
6832R **Caster blocks (c-hubs), 6061-T6 aluminum (red-anodized), left & right**
6832 Caster blocks (c-hubs), left & right
6845A **Drag link, machined 6061-T6 aluminum (blue-anodized)**
6845G **Drag link, machined 6061-T6 aluminum (green-anodized)**
6845T **Drag link, machined 6061-T6 aluminum (orange-anodized)**
6845R **Drag link, machined 6061-T6 aluminum (red-anodized)**
6851A Driveshaft assembly, front, extreme heavy duty (1) (left or right) (fully assembled, ready to install)/ screw pin (1)
6851R **Driveshafts, front, steel-spline constant-velocity (complete assembly) (2)**
7438 Linkage, steering
2742 Rod ends, long (6)/ hollow ball connectors (6)
5529 Shim set, 3x7x1mm (2), 3x6x0.5mm (4), 3x7x2mm (2)/ hollow balls, captured (4)
6739 Shock tower, front
6739X **Shock tower, front, 7075-T6 aluminum (blue-anodized) (1)/ body mount bracket (1)**
6739G **Shock tower, front, 7075-T6 aluminum (green-anodized) (1)/ body mount bracket (1)**
6739R **Shock tower, front, 7075-T6 aluminum (red-anodized) (1)/ body mount bracket (1)**
6845X Steering bellcranks/ servo saver/ servo saver spring/ servo spring retainer/servo horn, steering
6837X **Steering blocks, 6061-T6 aluminum (blue-anodized), left & right**
6837R **Steering blocks, 6061-T6 aluminum (red-anodized), left & right**
6837 Steering blocks, left & right
6854A **Stub axle assembly, front, outer, extreme heavy duty (1) (left or right) (assembled with internal-splined half shaft)**
6754 **Stub axle, front, 5mm (steel-splined constant-velocity driveshaft) (1)**
6732 Suspension arm guards, front (2)/ guard spacers (2)/ hollow balls (2)/ 3X16mm BCS (8)
3655P **Suspension arms, blue, front/rear (left & right), heavy duty (2)**
3655R Suspension arms, front/rear (left & right), heavy duty (2)
3655G **Suspension arms, green, front/rear (left & right), heavy duty (2)**
3655T **Suspension arms, orange, front/rear (left & right), heavy duty (2)**
3655L **Suspension arms, red, front/rear (left & right), heavy duty (2)**
3655A **Suspension arms, white, front/rear (left & right), heavy duty (2)**
6834 Suspension pin set, complete (front and rear)
6898 **Sway bar kit (front and rear) (includes front and rear sway bars and adjustable linkage)**
6742 Toe link, front & rear (molded composite) (2)/ hollow balls (4) (87mm center to center)
6742X **Toe links (TUBES blue-anodized, 7075-T6 aluminum, stronger than titanium) (87mm) (2)/ rod ends (4)/ aluminum wrench (1)**
6742G **Toe links (TUBES green-anodized, 7075-T6 aluminum, stronger than titanium) (87mm) (2)/ rod ends (4)/ aluminum wrench (1)**
6742R **Toe links (TUBES red-anodized, 7075-T6 aluminum, stronger than titanium) (87mm) (2)/ rod ends (4)/ aluminum wrench (1)**

Hardware

1926 Antenna caps, vinyl (2)/ antenna spool
1726 Antenna, tube (1)/ vinyl antenna cap (1)/ wire retainer (1)
3642 Attachment screws, shock (3x12mm shoulder screws) (6)
1552 Screws, 3x8mm cap-head machine (hex drive) (6)/washers (6)/ wrench
3935 Body clip (mounting clip), angled, 90-degrees (10)
3935A **Body clip (mounting clip), angled, 90-degrees (black) (10)**
3934 Body clips, heavy duty (12)
1589 Double-sided adhesive tape (25mm x 25mm) (2)
2586 Screws, 3x15mm cap-head machine (hex drive) (6)
2745 Nuts, 3mm nylon locking (12)
3647 Nuts, 4mm flanged nylon locking (steel, serrated) (8)
1747 **Nuts, 4mm nylon locking (10)**
1747R **Nuts, aluminum, flanged, serrated (4mm) (blue-anodized) (4)**
1747G **Nuts, aluminum, flanged, serrated (4mm) (green-anodized) (4)**
1747P **Nuts, aluminum, flanged, serrated (4mm) (pink-anodized) (4)**
1747A **Nuts, aluminum, flanged, serrated (4mm) (red-anodized) (4)**
1985 PTFE-coated washers, 5x8x0.5mm (20) (use with ball bearings)
5525 Rod ends (12)/ hollow balls (12)
2742X Rod ends, short (6)/ hollow balls (6)
3347 Screws, 2.5x5mm button-head machine (hex drive) (6)
3215 Screws, 2.5x6mm cap-head machine (hex drive) (6)
3965 Screws, 2.5x8mm cap-head machine (6)
2577 Screws, 3x10mm button-head machine (hex drive) (6)
2578 Screws, 3x12mm button-head machine (hex drive) (6)
2552 Screws, 3x12mm countersunk machine (6) (hex drive)
2579 Screws, 3x15mm button-head machine (hex drive) (6)
3646 Screws, 3x15mm flat-head machine (hex drive) (6)
2583 Screws, 3x18mm button-head machine (hex drive) (6)
2580 Screws, 3x20mm button-head machine (hex drive) (6)
2591 Screws, 3x23mm button-head machine (hex drive) (6)
2582 Screws, 3x30mm button-head machine (hex drive) (6)
2592 Screws, 3x40mm button-head machine (hex drive) (6)
2575 Screws, 3x6mm button-head machine (hex drive) (6)
2554 Screws, 3x6mm cap-head machine (hex drive) (6)
2534 Screws, 3x6mm countersunk machine (6) (hex drive)
3932 Screws, 3x6mm flat-head machine (hex drive) (6)
2576 Screws, 3x8mm button-head machine (hex drive) (6)
3931 Screws, 3x8mm flat-head machine (hex drive) (6)
3937 Screws, 4x12mm button-head machine (hex drive) (6)
2542 Screws, 4x12mm countersunk machine (hex drive) (6)
2546 Screws, 4x15mm countersunk machine (hex drive) (6)
2743 Set (grub) screws, 3mm hardened (12)
3642X Shoulder screws, Ultra Shocks (3x12 hex drive) (6)
2754 Stub axle pins (4)
2746 Washers, 3x6mm metal (12)

LED Lights

6588 **Accessory power supply (regulated, 3V, 3 amp)/ power tap connector (with cable)/ 3x10 BCS (2)/ 2.6x8 BCS (2)**
6797 **Bumper, front (with LED lights) (replacement for #6736 front bumper)**
6795 **LED light set, complete (includes bumper with LED lights, roof skid plate with LED lights, 3-volt accessory power supply, and power tap connector (with cable)) (fits #6717 body)**
6796 **Skid plate, roof (body) (with LED lights) (fits #6717 body)**

Motors & Electronics

1726 Antenna, tube (1)/ vinyl antenna cap (1)/ wire retainer (1)
2260 **BEC assembly (complete)**
6790 Gear adapter, fixed, Rustler® 4X4
2072A **Gear set (for 2070, 2075 servos)**
2252 **Gear set, metal (for 2250, 2255 servos)**
7460A Motor mount (assembled with 3x6 flat-head machine screw)/ 3.0mm NL (1)
7460R **Motor mount, 6061-T6 aluminum (blue-anodized)**
3785 Motor, Titan® 12T (12-Turn, 550 size)
3351R **Motor, Velineon® 3500, brushless (assembled with 12-gauge wire and gold-plated bullet connectors)**
7490 Plate, motor
7490G **Plate, motor, green**
7490A **Plate, motor, orange**
7490R **Plate, motor, red**
3347 Screws, 2.5x5mm button-head machine (hex drive) (6)
3932 Screws, 3x6mm flat-head machine (hex drive) (6)
2254 **Servo case, aluminum (blue-anodized) (middle) (for 2250 servo)**
2253 **Servo case, aluminum (red-anodized) (middle) (for 2255 servo)**
2251 **Servo case, plastic (top, middle, bottom)/ gaskets/ hardware (for 2250, 2255 servos)**
2074 Servo case/gaskets (for 2056 and 2075 waterproof servos)
2053 Servo gears (for 2055, 2056 servos)
2075R **Servo, digital high-speed, metal gear (ball bearing), waterproof**
2075 **Servo, digital high-torque (ball bearing), waterproof**
2250 **Servo, digital high-torque 330 coreless, metal gear (ball bearing), waterproof**
2255 **Servo, digital high-torque 400 brushless, metal gear (ball bearing), waterproof**
2075X **Servo, digital high-torque, metal gear (ball bearing), waterproof**
2056 Servo, high-torque, waterproof (blue case)
3350R **Velineon® VXL-3s Brushless Power System, waterproof (includes VXL-3s waterproof ESC, Velineon 3500 motor, and speed control mounting plate (part #3725R))**
3355R **Velineon® VXL-3s Electronic Speed Control, waterproof (brushless) (fwd/rev/brake)**
3018R XL-5 Electronic Speed Control, waterproof (land version, low-voltage detection, fwd/rev/brake)

Radio System, Batteries & Chargers

2842X **5000mAh 7.4v 2-Cell 25C LiPo Battery**
2843X **5800mAh 7.4v 2-Cell 25C LiPo Battery**
2869X **7600mAh 7.4v 2-Cell 25C LiPo Battery**
2976 **AC to DC converter, 40W**
2938X **Adapter, Traxxas® iD® LiPo battery (adapts Traxxas iD batteries to separate balance ports)**
2943 **Battery charge indicators (green (4), blue (4), grey (4))**
6548 Battery door, transmitter (replacement for #6516, 6517, 6528, 6529, 6530 transmitters)
2914 **Battery, Power Cell AA Alkaline (4)**
2923X Battery, Power Cell, 3000mAh (NiMH, 7-C flat, 8.4V)
2926X **Battery, Power Cell, 3000mAh (NiMH, 7-C hump, 8.4V)**
2940X **Battery, Series 3 Power Cell, 3300mAh (NiMH, 7-C flat, 8.4V)**
2941X **Battery, Series 3 Power Cell, 3300mAh (NiMH, 7-C hump, 8.4V)**
2950X **Battery, Series 4 Power Cell, 4200mAh (NiMH, 7-C flat, 8.4V)**
2951X **Battery, Series 4 Power Cell, 4200mAh (NiMH, 7-C hump, 8.4V)**
2960X **Battery, Series 5 Power Cell, 5000mAh (NiMH, 7-C flat, 8.4V)**
2961X **Battery, Series 5 Power Cell, 5000mAh (NiMH, 7-C hump, 8.4V)**
2984 **Battery/charger completer pack (includes #2969 2-amp NiMH peak detecting AC charger (1), #2926X 3000mAh 8.4V 7-cell NiMH battery (1))**
2992 **Battery/charger completer pack (includes #2970 iD® charger (1), #2843X 5800mAh 7.4V 2-cell 25C LiPo battery (1))**
2260 **BEC assembly (complete)**
2975 Charger, DC, 4 amp (6 - 7 cell, 7.2 - 8.4 volt, NiMH)
2972 **Charger, EZ-Peak® Dual, 100W, NiMH/LiPo with iD® Auto Battery Identification**
2973 **Charger, EZ-Peak® Live Dual, 200W, NiMH/LiPo with iD® Auto Battery Identification**
2971 **Charger, EZ-Peak® Live, 100W, NiMH/LiPo with iD® Auto Battery Identification**
2970 **Charger, EZ-Peak® Plus, 4 amp, NiMH/LiPo with iD® Auto Battery Identification**
6525 **Communication link, telemetry expander**
6541 **Connector, power tap (with cable) (long)/ wire tie**
2978 **Fuse, charger, 5A (2) (for #2974, 2975, 2977)**
2072A **Gear set (for 2070, 2075 servos)**
2252 **Gear set, metal (for 2250, 2255 servos)**
2968X **LiPo cell voltage checker/balancer (includes #2938X adapter for Traxxas® iD® batteries)**
2968 **LiPo cell voltage checker/balancer (requires #2938X adapter for Traxxas® iD® batteries)**
6535 **Mount, temperature sensor (electric motors)/ wire tie/ thermal pad**
6519 Receiver, micro, TQ 2.4GHz (3-channel)
6518 **Receiver, micro, TQi 2.4GHz with telemetry (5-channel)**
3932 Screws, 3x6mm flat-head machine (hex drive) (6)
6552 **Seal kit, expander box (includes o-ring, seals, and silicone grease)**
6526 **Sensor, auto-detectable, temperature**
6527 **Sensor, auto-detectable, voltage**
6520 **Sensor, RPM (long)/ 3x4mm BCS (2)/ 3x4 GS (1)**
6521 **Sensor, temperature and voltage (long)**
2254 **Servo case, aluminum (blue-anodized) (middle) (for 2250 servo)**
2253 **Servo case, aluminum (red-anodized) (middle) (for 2255 servo)**
2251 **Servo case, plastic (top, middle, bottom)/ gaskets/ hardware (for 2250, 2255 servos)**
2074 Servo case/gaskets (for 2056 and 2075 waterproof servos)
2053 Servo gears (for 2055, 2056 servos)
2075R **Servo, digital high-speed, metal gear (ball bearing), waterproof**
2075 **Servo, digital high-torque (ball bearing), waterproof**
2250 **Servo, digital high-torque 330 coreless, metal gear (ball bearing), waterproof**
2255 **Servo, digital high-torque 400 brushless, metal gear (ball bearing), waterproof**
2075X **Servo, digital high-torque, metal gear (ball bearing), waterproof**
2056 Servo, high-torque, waterproof (blue case)
6553X **Telemetry expander 2.0 and GPS module 2.0, TQi radio system**
6550X **Telemetry expander 2.0, TQi radio system (for use only with #6551X GPS module)**
6551X **Telemetry GPS module 2.0, TQi radio system (for use only with #6550X telemetry expander)**
6539 **Telemetry trigger magnet holder, center differential/ magnet, 5x2mm (1)/ 3x8mm BCS (3)**
6538 **Telemetry trigger magnet holders, spur gear/ magnet, 5x2mm (1)/ 3x8mm CCS (3)/ 3x10mm CCS (3)**
6540 **Telemetry trigger magnet, 5X2mm (1)**
6509R **TQi 2.4 GHz High Output radio system, 2-channel, Traxxas Link™ enabled, TSM (2-ch transmitter, 5-ch micro receiver)**
6507R **TQi 2.4 GHz High Output radio system, 4-channel with Traxxas Link™ Wireless Module, TSM (4-ch transmitter, 5-ch micro receiver)**
6516 Transmitter, TQ 2.4GHz, 2-channel (transmitter only)
6528 **Transmitter, TQi Traxxas Link™ enabled, 2.4GHz high output, 2-channel (transmitter only)**
6529 **Transmitter, TQi Traxxas Link™ enabled, 2.4GHz high output, 3-channel (transmitter only)**
6530 **Transmitter, TQi Traxxas Link™ enabled, 2.4GHz high output, 4-channel (transmitter only)**
6511 **Traxxas Link™ Wireless Module**

Ready-To-Race Model

67064-1 Rustler® 4X4: 1/10-scale 4WD Stadium Truck with TQ 2.4GHz radio system

Rear Suspension

6823 Bulkhead tie bars, front & rear, aluminum (blue-anodized)
6823G **Bulkhead tie bars, front & rear, aluminum (green-anodized)**
6823R **Bulkhead tie bars, front & rear, aluminum (red-anodized)**
7429 Bulkhead, rear
3641A Camber link set (plastic / non-adjustable) (front & rear) (grey)
3641 **Camber link set (plastic/ non-adjustable) (front & rear) (black)**
3644X **Camber links, rear (TUBES blue-anodized, 7075-T6 aluminum, stronger than titanium) (73mm) (2)/ rod ends (4)/ aluminum wrench (1) (#2579 3x15 BCS (4) required for installation)**
3644G **Camber links, rear (TUBES green-anodized 7075-T6 aluminum, stronger than titanium) (73mm) (2)/ rod ends (4)/ aluminum wrench (1) (#2579 3x15 BCS (4) required for installation)**
3644R **Camber links, rear (TUBES red-anodized, 7075-T6 aluminum, stronger than titanium) (73mm) (2)/ rod ends (4)/ aluminum wrench (1) (#2579 3x15 BCS (4) required for installation)**
1952X **Carriers, stub axle (blue-anodized 6061-T6 aluminum) (rear) (2)**
1952G **Carriers, stub axle (green-anodized 6061-T6 aluminum) (rear) (2)**
1952 Carriers, stub axle (rear) (2)

RUSTLER 4X4 (67064-1)

1952A **Carriers, stub axle (red-anodized 6061-T6 aluminum) (rear) (2)**
6852A Driveshaft assembly, rear, extreme heavy duty (1) (left or right) (fully assembled, ready to install)/ screw pin (1)
6852R **Driveshafts, rear, steel-spline constant-velocity (complete assembly) (2)**
5529 Shim set, 3x7x1mm (2), 3x6x0.5mm (4), 3x7x2mm (2)/ hollow balls, captured (4)
6738 Shock tower, rear
6738X **Shock tower, rear, 7075-T6 aluminum (blue-anodized) (1)/ body mount bracket (1)**
6738G **Shock tower, rear, 7075-T6 aluminum (green-anodized) (1)/ body mount bracket (1)**
6738R **Shock tower, rear, 7075-T6 aluminum (red-anodized) (1)/ body mount bracket (1)**
6853A **Stub axle assembly, rear, outer, extreme heavy duty (1) (left or right) (assembled with internal-splined half shaft)**
3655P **Suspension arms, blue, front/rear (left & right), heavy duty (2)**
3655R Suspension arms, front/rear (left & right), heavy duty (2)
3655G **Suspension arms, green, front/rear (left & right), heavy duty (2)**
3655T **Suspension arms, orange, front/rear (left & right), heavy duty (2)**
3655L **Suspension arms, red, front/rear (left & right), heavy duty (2)**
3655A **Suspension arms, white, front/rear (left & right), heavy duty (2)**
6834 Suspension pin set, complete (front and rear)
6898 **Sway bar kit (front and rear) (includes front and rear sway bars and adjustable linkage)**

Shocks (GTR)

7466X **Body, GTR long (hard-anodized, PTFE-coated aluminum) (1)**
7466 **Body, GTR long shock, aluminum (blue-anodized) (PTFE-coated bodies) (1)**
7466G **Body, GTR long shock, aluminum (green-anodized) (PTFE-coated bodies) (1)**
7466A **Body, GTR long shock, aluminum (orange-anodized) (PTFE-coated bodies) (1)**
7467X **Body, GTR xx-long (hard-anodized, PTFE-coated aluminum) (1)**
7467 **Body, GTR xx-long shock, aluminum (blue-anodized) (PTFE-coated bodies) (1)**
7467G **Body, GTR xx-long shock, aluminum (green-anodized) (PTFE-coated bodies) (1)**
7467A **Body, GTR xx-long shock, aluminum (orange-anodized) (PTFE-coated bodies) (1)**
7468X **Caps & spring retainers, GTR shock (upper cap (2)/ hollow balls (4)/ bottom cap (2)/ upper retainer (2)/ lower retainer (2))**
7468 **Caps and spring retainers, GTR long/xx-long shock (upper cap (2)/ hollow balls (4)/ bottom cap (2)/ upper retainer (2)/ lower retainer (2))**
5475 **Multi-tool (plastic)**
5158 **Nuts, 2.5mm nylon locking (12)**
7463 **Rebuild kit, GTR long/xx-long shocks (x-rings, bladders, pistons, piston nuts, shock rod ends, hollow balls) (renews 2 shocks)**
5469 **Rod ends (GTR shocks) (6)**
7464T **Shaft, GTR long, TiN-coated (2)**
7461 **Shocks, GTR long blue-anodized, PTFE-coated bodies with TiN shafts (fully assembled, without springs) (2)**
7461G **Shocks, GTR long green-anodized, PTFE-coated bodies with TiN shafts (fully assembled, without springs) (2)**
7461X **Shocks, GTR long hard-anodized, PTFE-coated bodies with TiN shafts (assembled) (2) (without springs)**
7462 **Shocks, GTR xx-long blue-anodized, PTFE-coated bodies with TiN shafts (fully assembled, without springs) (2)**
7462G **Shocks, GTR xx-long green-anodized, PTFE-coated bodies with TiN shafts (fully assembled, without springs) (2)**
7462X **Shocks, GTR xx-long hard-anodized, PTFE-coated bodies with TiN shafts (assembled) (2) (without springs)**
8459 **Spring retainers, lower (captured) (4)/ 2.5x10 CS (4)**
7440 **Spring, shock, white (GTR long) (0.623 rate orange) (1 pair)**
7441 **Spring, shock, white (GTR long) (0.653 rate green) (1 pair)**
7444 **Spring, shock, white (GTR long) (0.767 rate black) (1 pair)**
7445 **Spring, shock, white (GTR long) (0.810 rate pink) (1 pair)**
7448 **Spring, shock, white (GTR long) (0.892 rate blue) (1 pair)**
7442 **Spring, shock, white (GTR xx-long) (0.711 rate orange) (1 pair)**
7443 **Spring, shock, white (GTR xx-long) (0.762 rate green) (1 pair)**
7446 **Spring, shock, white (GTR xx-long) (0.874 rate black) (1 pair)**
7447 **Spring, shock, white (GTR xx-long) (0.884 rate pink) (1 pair)**
7449 **Spring, shock, white (GTR xx-long) (1.004 rate blue) (1 pair)**

Shocks (Pro-level Aluminum)

2664 **Big Bore shock cylinder (long) (1)**
2666 **Big Bore shock cylinder (XX-long) (1)**
5862 **Big Bore shocks (hard-anodized & PTFE-coated T6 aluminum) (assembled with TiN shafts and springs) (front & rear) (4)**
2660 **Big Bore shocks (long) (hard-anodized & PTFE-coated T6 aluminum) (assembled with TiN shafts) w/o springs (front) (2)**
2662 **Big Bore shocks (XX-long) (hard-anodized & PTFE-coated T6 aluminum) (assembled with TiN shafts) w/o springs (rear) (2)**
2669 **Piston head set (2-hole (2)/ 3-hole (2))/ shock mounting bushings & washers (2) (Big Bore Shocks)**
2362 **Rebuild kit, Ultra shocks (for 2 shocks)**
1942 Rod ends (16 long & 4 short)/ hollow ball connectors (18)/ ball screws (2)
2742X Rod ends, short (6)/ hollow balls (6)
2667 **Shock caps, aluminum (Big Bore Shocks) (2)**
1664T **Shock shafts, hardened steel, titanium nitride coated (long) (2)**
2656T **Shock shafts, hardened steel, titanium nitride coated (xx-long) (2)**
1664 Shock shafts, steel, chrome finish (long) (2)
2656 Shock shafts, steel, chrome finish (xx-long) (2)
1765 Silicone diaphragms (4)
1666 Silicone shock oil (30 wt)
2668 **Spring retainers, upper & lower (2)/ spring pre-load spacers: 1mm (4)/ 1.5mm (2)/ 2mm (2)/ 4mm (2)/ 8mm (2) (Big Bore Shocks)**
6863 **Springs, front (progressive, +10% rate, pink) (2)**
6864 **Springs, front (progressive, +20% rate, blue) (2)**
6862 **Springs, front (progressive, -10% rate, green) (2)**
6861 **Springs, front (progressive, -20% rate, orange) (2)**
6857 **Springs, front (white) (progressive rate) (2)**
6867 **Springs, rear (progressive, +10% rate, pink) (2)**
6868 **Springs, rear (progressive, +20% rate, blue) (2)**
6866 **Springs, rear (progressive, -10% rate, green) (2)**
6865 **Springs, rear (progressive, -20% rate, orange) (2)**
6858 **Springs, rear (white) (progressive rate) (2)**

Shocks (Ultra Shocks)

3642 **Attachment screws, shock (3x12mm shoulder screws) (6)**
3765A Body, Ultra Shock(s) (long) (grey) (2)
3766A Body, Ultra Shock(s) (XXL) (grey) (2)
5475 Multi-tool (plastic)
2362 **Rebuild kit, Ultra shocks (for 2 shocks)**
1942 **Rod ends (16 long & 4 short)/ hollow ball connectors (18)/ ball screws (2)**
2742X Rod ends, short (6)/ hollow balls (6)
3767 Shock caps (2)/ shock bottoms (2)
8361 Shock caps (black) (4) (assembled with hollow balls)
3767A **Shock caps, aluminum (blue-anodized) (4) (fits all Ultra Shocks)**
3767G **Shock caps, aluminum (green-anodized) (4) (fits all Ultra Shocks)**
3767P **Shock caps, aluminum (pink-anodized) (4) (fits all Ultra Shocks)**
3767X **Shock caps, aluminum (red-anodized) (4) (fits all Ultra Shocks)**
1664T **Shock shafts, hardened steel, titanium nitride coated (long) (2)**
2656T **Shock shafts, hardened steel, titanium nitride coated (xx-long) (2)**
1765 Silicone diaphragms (4)
1666 **Silicone shock oil (30 wt)**
3769 **Spring pre-load spacers: 1mm (4)/ 2mm (2)/ 4mm (2)/ 8mm (2)**
3768 Spring retainers, upper & lower (2)/ piston head set (2-hole (2)/ 3-hole (2))
3759 Springs, front (2)
6863 **Springs, front (progressive, +10% rate, pink) (2)**
6864 **Springs, front (progressive, +20% rate, blue) (2)**
6862 **Springs, front (progressive, -10% rate, green) (2)**
6861 **Springs, front (progressive, -20% rate, orange) (2)**
6857 **Springs, front (white) (progressive rate) (2)**
6867 **Springs, rear (progressive, +10% rate, pink) (2)**
6868 **Springs, rear (progressive, +20% rate, blue) (2)**
6866 **Springs, rear (progressive, -10% rate, green) (2)**
6865 **Springs, rear (progressive, -20% rate, orange) (2)**
3757X Springs, rear (white) (2)
6858 **Springs, rear (white) (progressive rate) (2)**
3760 **Ultra Shocks (black) (long) (complete w/ spring pre-load spacers & springs) (front) (2)**
3762 **Ultra Shocks (black) (xx-long) (complete w/ spring pre-load spacers & springs) (rear) (2)**
3760A Ultra Shocks (grey) (long) (complete w/ spring pre-load spacers & springs) (2)
3762A Ultra Shocks (grey) (xx-long) (complete w/ spring pre-load spacers & springs) (rear) (2)

Slipper Clutch Components

5119A Ball bearings, black rubber sealed (10x15x4mm) (2)
6893G **Bearing adapter, 6061-T6 aluminum (green-anodized) (1)/ 10x15x4mm ball bearing (black rubber sealed) (1) (for slipper shaft)**
6893X **Bearing adapter, 6160-T6 aluminum (blue-anodized) (1)/10x15x4mm ball bearing (blue rubber sealed) (1) (for slipper shaft)**
6888 Drive hub, center, rear (1)/ 4x3 GS (1)

6883 **Gear set, center differential (output gears (2)/ spider gears (2)/ spider gear shaft)**
6884 **Housing, center differential/ x-ring gaskets (2)/ ring gear gasket/ bushings (2)/ 5x10x0.5 TW (2)/ CCS 2.5x8 (4)**
6893 Input shaft (slipper shaft)/ bearing adapter (1)/pin (1)
5352R Rebuild kit (heavy duty), slipper clutch (steel disc/ aluminum friction pads (3)/ spring (1)/ 2x9.8mm pin/ 5x8mm MW/ 5.0mm NL (1)/ 4.0mm NL (1))
5352X **Rebuild kit, slipper clutch (steel disc/ friction pads (3)/ spring (2)/ 2x9.8mm pin/ 5x8mm MW/ 5.0mm NL (1)/ 4.0mm NL (1))**
5552X **Rebuild kit, slipper clutch (steel disc/ friction pads (3)/ spring (2)/ pin/ 4.0mm NL (1)/ 5.0mm NL (1))**
2554 Screws, 3x6mm cap-head machine (hex drive) (6)
6878 **Slipper clutch, complete**
5556 Slipper pressure plate & hub (aluminum alloy)
5351 Slipper pressure plate and hub (alloy)

Spur Gears & Pinion Gears

7477 Cover, gear/ wire retainer
6790 Gear adapter, fixed, Rustler® 4X4
6746 Gear, 10-T pinion (32-p) (steel)/ set screw
6747 **Gear, 11-T pinion (32-p) (steel)/ set screw**
3942X **Gear, 12-T pinion (32-p), heavy duty (machined, hardened steel)/ set screw**
3943X **Gear, 13-T pinion (32-p), heavy duty (machined, hardened steel)/ set screw**
3944X **Gear, 14-T pinion (32-p), heavy duty (machined, hardened steel)/ set screw**
3945X **Gear, 15-T pinion (32-p), heavy duty (machined, hardened steel)/ set screw**
3946X **Gear, 16-T pinion (32-p), heavy duty (machined, hardened steel)/ set screw**
3947X **Gear, 17-T pinion (32-p), heavy duty (machined, hardened steel)/ set screw**
3948X **Gear, 18-T pinion (32-p), heavy duty (machined, hardened steel)/ set screw**
3949X **Gear, 19-T pinion (32-p), heavy duty (machined, hardened steel)/ set screw**
3950X **Gear, 20-T pinion (32-p), heavy duty (machined, hardened steel)/ set screw**
3951X **Gear, 21-T pinion (32-p), heavy duty (machined, hardened steel)/ set screw**
3952X **Gear, 22-T pinion (32-p), heavy duty (machined, hardened steel)/ set screw**
6745 **Gear, 9-T pinion (32-p) (steel)/ set screw**
6842 **Spur gear, 50-tooth (0.8 metric pitch, compatible with 32-pitch)**
6842R **Spur gear, 50-tooth (0.8 metric pitch, compatible with 32-pitch) (for center differential)**
6843 **Spur gear, 52-tooth (0.8 metric pitch, compatible with 32-pitch)**
6843R **Spur gear, 52-tooth (0.8 metric pitch, compatible with 32-pitch) (for center differential)**
3956 Spur gear, 54-tooth (0.8 metric pitch, compatible with 32-pitch)
3956R **Spur gear, 54-tooth (0.8 metric pitch, compatible with 32-pitch) (requires #6814 center differential)**
3956X **Spur gear, steel, 54-tooth (0.8 metric pitch, compatible with 32-pitch) (requires #6780 center differential)**

Steering Components

1552 Screws, 3x8mm cap-head machine (hex drive) (6)/washers (6)/ wrench
2728 **Ball bearings (5x8x2.5mm) (2)**
5114 Ball bearings, blue rubber sealed (5x8x2.5mm) (2)
6845A **Drag link, machined 6061-T6 aluminum (blue-anodized)**
6845G **Drag link, machined 6061-T6 aluminum (green-anodized)**
6845T **Drag link, machined 6061-T6 aluminum (orange-anodized)**
6845R **Drag link, machined 6061-T6 aluminum (red-anodized)**
7438 Linkage, steering
2742X Rod ends, short (6)/ hollow balls (6)
6845X Steering bellcranks/ servo saver/ servo saver spring/ servo spring retainer/servo horn, steering
6742 Toe link, front & rear (molded composite) (2)/ hollow balls (4) (87mm center to center)
6742X **Toe links (TUBES blue-anodized, 7075-T6 aluminum, stronger than titanium) (87mm) (2)/ rod ends (4)/ aluminum wrench (1)**
6742G **Toe links (TUBES green-anodized, 7075-T6 aluminum, stronger than titanium) (87mm) (2)/ rod ends (4)/ aluminum wrench (1)**
6742R **Toe links (TUBES red-anodized, 7075-T6 aluminum, stronger than titanium) (87mm) (2)/ rod ends (4)/ aluminum wrench (1)**
2746 Washers, 3x6mm metal (12)

Suspension Linkage

3641A Camber link set (plastic / non-adjustable) (front & rear) (grey)
3641 **Camber link set (plastic/ non-adjustable) (front & rear) (black)**
3643X **Camber links, front (TUBES blue-anodized, 7075-T6 aluminum, stronger than titanium) (83mm) (2)/ rod ends (4)/ aluminum wrench (1) (#2579 3x15 BCS (4) required for installation)**
3643G **Camber links, front (TUBES green-anodized, 7075-T6 aluminum, stronger than titanium) (83mm) (2)/ rod ends (4)/ aluminum wrench (1) (#2579 3x15 BCS (4) required for installation)**
3643R **Camber links, front (TUBES red-anodized, 7075-T6 aluminum, stronger than titanium) (83mm) (2)/ rod ends (4)/ aluminum wrench (1) (#2579 3x15 BCS (4) required for installation)**
3644X **Camber links, rear (TUBES blue-anodized, 7075-T6 aluminum, stronger than titanium) (73mm) (2)/ rod ends (4)/ aluminum wrench (1) (#2579 3x15 BCS (4) required for installation)**
3644G **Camber links, rear (TUBES green-anodized 7075-T6 aluminum, stronger than titanium) (73mm) (2)/ rod ends (4)/ aluminum wrench (1) (#2579 3x15 BCS (4) required for installation)**
3644R **Camber links, rear (TUBES red-anodized, 7075-T6 aluminum, stronger than titanium) (73mm) (2)/ rod ends (4)/ aluminum wrench (1) (#2579 3x15 BCS (4) required for installation)**
5525 Rod ends (12)/ hollow balls (12)
3739 Screw pin set (Rustler®/ Bandit/ Stampede®)
6834 Suspension pin set, complete (front and rear)
2537 **Threaded rods (20/25/44mm 1 ea.)/ (1) 12mm set screw**
3644 **Turnbuckles, camber link, 39mm (69mm center to center) (assembled with rod ends and hollow balls) (1 left, 1 right)**
3643 **Turnbuckles, camber link, 49mm (82mm center to center) (assembled with rod ends and hollow balls) (1 left, 1 right)**
5539 **Turnbuckles, camber links, 58mm (assembled with rod ends and hollow balls) (2)**

Team Traxxas Items

2514 **Decal sheet, racing sponsors**
6160X **DVD, Maxx® Power! Full Throttle Action (sleeve)**
9950 **Official Team Traxxas® racing decal set (flag logo/ 6-color)**
9909 **Traxxas® racing banner, red & black (3x7 feet)**

Tires & Wheels

5116 Ball bearings, blue rubber sealed (5x11x4mm) (2)
5854 **Hub retainer, 17mm hubs, M4 X 0.7 (4) (use with #5853X, #6856X, #6469)**
3647 Nuts, 4mm flanged nylon locking (steel, serrated) (8)
1747R **Nuts, aluminum, flanged, serrated (4mm) (blue-anodized) (4)**
1747G **Nuts, aluminum, flanged, serrated (4mm) (green-anodized) (4)**
1747P **Nuts, aluminum, flanged, serrated (4mm) (pink-anodized) (4)**
1985 PTFE-coated washers, 5x8x0.5mm (20) (use with ball bearings)
1647 Silicone grease
2754 Stub axle pins (4)
4175 **Tires & wheels, assembled, glued (2.8") (All-Star black chrome wheels, paddle tires, foam inserts) (nitro rear/ 4WD electric front/rear) (2) (TSM rated)**
3669A **Tires & wheels, assembled, glued (2.8") (All-Star black chrome wheels, Talon tires, foam inserts) (front/rear, Stampede 4x4) (2)**
3669 **Tires & wheels, assembled, glued (2.8") (All-Star chrome wheels, Talon tires, foam inserts) (front/rear, Stampede 4x4) (2)**
6773G **Tires & wheels, assembled, glued (2.8") (RXT 4X4 green wheels, Talon Extreme tires, foam inserts) (4WD electric front/rear, 2WD electric front only) (2) (TSM rated)**
6773X **Tires & wheels, assembled, glued (2.8") (RXT black chrome wheels, Talon Extreme tires, foam inserts) (4WD electric front/rear, 2WD electric front only) (2) (TSM rated)**
6773 Tires & wheels, assembled, glued (2.8") (RXT black wheels, Talon Extreme tires, foam inserts) (4WD electric front/rear, 2WD electric front only) (2) (TSM rated)
6773A **Tires & wheels, assembled, glued (2.8") (RXT orange wheels, Talon Extreme tires, foam inserts) (4WD electric front/rear, 2WD electric front only) (2) (TSM rated)**
6773R **Tires & wheels, assembled, glued (2.8") (RXT satin chrome wheels, Talon Extreme tires, foam inserts) (4WD electric front/rear, 2WD electric front only) (2) (TSM rated)**
6792 **Tires & wheels, assembled, glued (black 2.8" wheels, Sledgehammer™ tires, foam inserts) (2) (TSM® rated)**
6771 **Tires and wheels, assembled, glued 2.8" (All-Star chrome wheels, Maxx® tires, foam inserts) (2)**
6770 **Tires, Maxx® 2.8" (2)/ foam inserts (2)**
3671 **Tires, Talon 2.8" (2)/ foam inserts (2)**
6769 Tires, Talon EXT 2.8" (2)/ foam inserts (2)
1654 Wheel hubs, hex (rear) (2)/ stub axle pins (2)
1654X **Wheel hubs, hex (blue-anodized, lightweight aluminum) (2)/ axle pins(4)**

RUSTLER 4X4 (67064-1)

6856X	**Wheel hubs, splined, 17mm, short (4)/ wheel nuts, splined, 17mm (4) (blue-anodized)/ hub retainer M4 X 0.7 (4)/ axle pin (4)/ wrench, 5mm**
5353	**Wheel nuts, splined, 17mm (blue-anodized) (4)**
5480X	**Wheel wrench, splined, 17mm**
5576A	**Wheels, All-Star 2.8" (black chrome) (front/rear, Stampede 4x4) (2)**
5576	**Wheels, All-Star 2.8" (chrome) (Stampede 4x4 front or rear) (2)**
6772	Wheels, RXT 2.8" (black) (2)
5572	**Wheels, Twin-Spoke 2.8" (chrome) (front/rear, Stampede 4x4) (2)**

Traxxas Tools

3433X	**Body reamer (aluminum handle)**
3433	**Body reamer (plastic handle)**
3436	**Cap, body reamer**
3432	**Scissors, curved tip**
3431	**Scissors, straight tip**
8712	**Speed Bit Essentials Set, hex and nut driver, 7-piece, includes premium handle (medium), travel pouch, hex drivers (straight: 1.5mm, 2.0mm, 2.5mm) and nut drivers (5.0mm, 5.5mm, 7.0mm, and 8.0mm), 1/4" drive**
8721	**Speed bit handle, medium (one piece)**
8720	**Speed bit handle, premium, large (rubber overmold)**
8722	**Speed bit handle, premium, medium (rubber overmold)**
8710	**Speed Bit Master Set, hex and nut driver, 13-piece, includes premium handle (medium), travel pouch, hex drivers (straight: 1.5mm, 2.0mm, 2.5mm, 3.0mm), (ball-end: 2.0mm, 2.5mm, 3.0mm), and nut drivers (4.00mm, 4.50mm, 5.00mm, 5.50mm, 7.00mm, 8.00mm),**
8711	**Speed Bit Master Set, hex driver, 7-piece straight and ball end, includes premium handle (medium), travel pouch, hex drivers (straight: 1.5mm, 2.0mm, 2.5mm, 3.0mm) (ball end: 2.0mm, 2.5mm, 3.0mm), 1/4" drive**
8719	**Speed Bit Master Set, nut driver, 6-piece, includes premium handle (medium), travel pouch, and nut drivers (4.0mm, 4.5mm, 5.0mm, 5.5mm, 7.0mm, 8.0mm), 1/4" drive**
8716	**Speed Bit Set, hex driver, 2-piece ball-end (2.0mm, 2.5mm), 1/4" drive**
8716X	**Speed Bit Set, hex driver, 3-piece ball-end (2.0mm, 2.5mm, 3.0mm), 1/4" drive**
8715	**Speed Bit Set, hex driver, 3-piece straight (1.5mm, 2.0mm, 2.5mm), 1/4" drive**
8715X	**Speed Bit Set, hex driver, 4-piece straight (1.5mm, 2.0mm, 2.5mm, 3.0mm), 1/4" drive**
3415	**Tool set with pouch (includes 1.5mm, 2.0mm, 2.5mm, 3.0mm, 3.5mm, 4mm drivers/ 4mm, 5mm, 5.5mm, 7mm and 8mm nut drivers/ 2mm, 4mm, and 5mm slotted screwdrivers/ #00 Phillips, #0 Phillips, and #1 Phillips screwdrivers/ 4mm and 8mm wrench/ driver handle**

Turnbuckles & Threaded Rods

3643X	**Camber links, front (TUBES blue-anodized, 7075-T6 aluminum, stronger than titanium) (83mm) (2)/ rod ends (4)/ aluminum wrench (1) (#2579 3x15 BCS (4) required for installation)**
3643G	**Camber links, front (TUBES green-anodized, 7075-T6 aluminum, stronger than titanium) (83mm) (2)/ rod ends (4)/ aluminum wrench (1) (#2579 3x15 BCS (4) required for installation)**
3643R	**Camber links, front (TUBES red-anodized, 7075-T6 aluminum, stronger than titanium) (83mm) (2)/ rod ends (4)/ aluminum wrench (1) (#2579 3x15 BCS (4) required for installation)**
3644X	**Camber links, rear (TUBES blue-anodized, 7075-T6 aluminum, stronger than titanium) (73mm) (2)/ rod ends (4)/ aluminum wrench (1) (#2579 3x15 BCS (4) required for installation)**
3644G	**Camber links, rear (TUBES green-anodized 7075-T6 aluminum, stronger than titanium) (73mm) (2)/ rod ends (4)/ aluminum wrench (1) (#2579 3x15 BCS (4) required for installation)**
3644R	**Camber links, rear (TUBES red-anodized, 7075-T6 aluminum, stronger than titanium) (73mm) (2)/ rod ends (4)/ aluminum wrench (1) (#2579 3x15 BCS (4) required for installation)**
5525	**Rod ends (12)/ hollow balls (12)**
3644	**Turnbuckles, camber link, 39mm (69mm center to center) (assembled with rod ends and hollow balls) (1 left, 1 right)**
3643	**Turnbuckles, camber link, 49mm (82mm center to center) (assembled with rod ends and hollow balls) (1 left, 1 right)**
5539	**Turnbuckles, camber links, 58mm (assembled with rod ends and hollow balls) (2)**

If you have questions or need technical assistance, call Traxxas at:

1-888-TRAXXAS

(1-888-872-9927) (U.S. residents only)

For orders, calls outside the U.S., and other information, call 972-549-3000, or fax to 972-549-3011 e-mail Traxxas at support@Traxxas.com

TRAXXAS.com

REV. 201019 1539

RUSTLER 4X4 VXL BRUSHLESS

MODEL 67076-4

1/10 SCALE 4WD STADIUM TRUCK



VELINEON 3500 BURSHLESS MOTOR

WATERPROOF VXL-3S ESC

TQi 2.4GHz TRANSMITTER COMPATIBLE WITH TRAXXAS LINK WIRELESS MODULE

THE STADIUM TRUCK REDEFINED

The Rustler® 4X4 VXL is a hard-charging wheelie machine that captures the speed and classic style of the number-one-selling Rustler and injects it with brutal 4-wheel drive performance, increased durability, and even more fun! Bury the throttle and the Rustler 4X4 launches its front wheels skyward as it shreds the ground underneath. Beneath the sleek clipless body, the heavy duty driveline delivers extreme Velineon® brushless horsepower. The larger Talon™ EXT wheels and tires provide versatility and grip for any terrain, from backyard trails to concrete skate parks. Rustler 4X4 VXL destroys convention to become the new performance and fun standard for 4x4 stadium trucks!

*With 3S LiPo battery (sold separately) and optional gearing

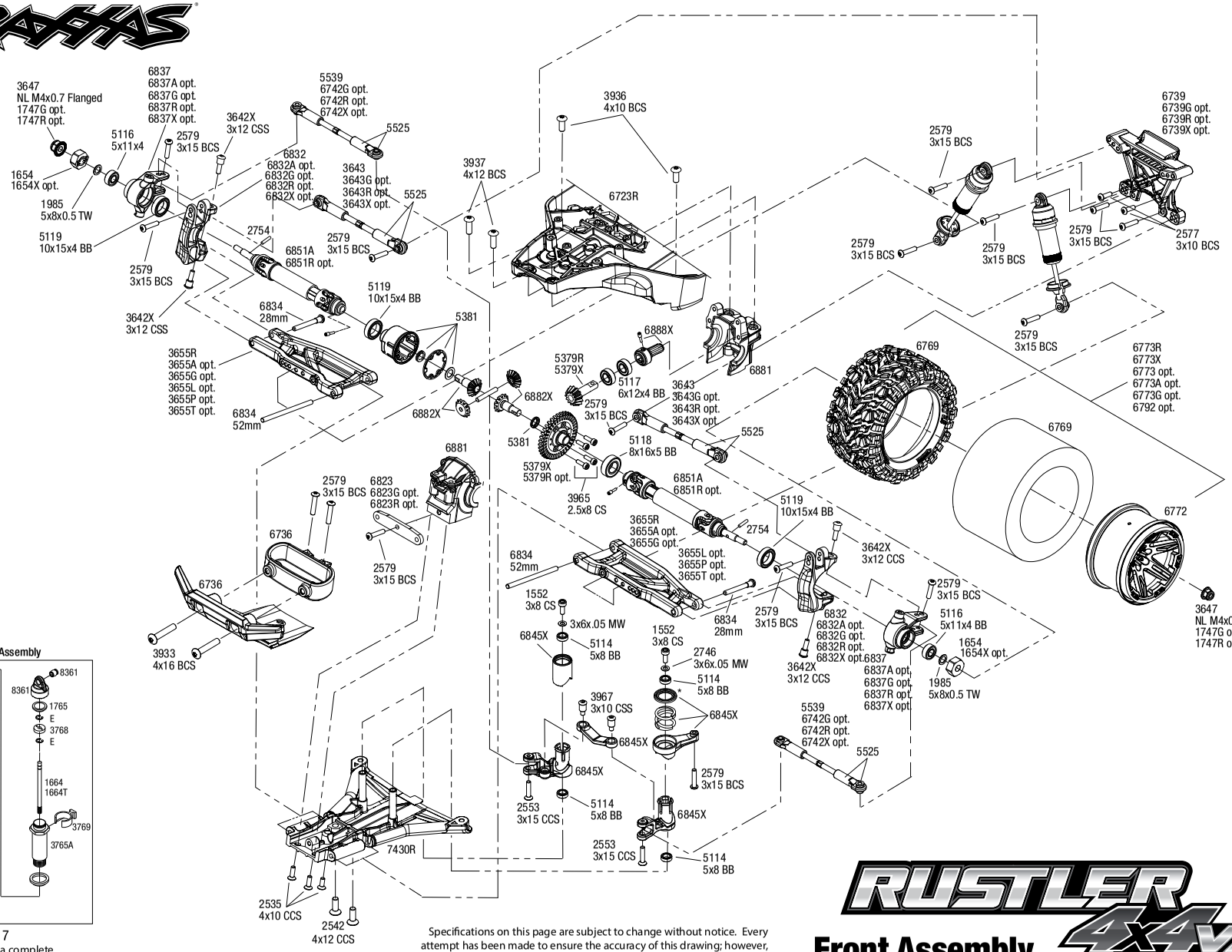

Shock Assembly

REV 200922-R17

See Parts List for a complete listing of optional accessories.

Specifications on this page are subject to change without notice. Every attempt has been made to ensure the accuracy of this drawing; however, Traxxas cannot be held responsible for typographical or other errors.

RUSTLER 4X4 VXL BRUSHLESS

Front Assembly

RUSTLER 4X4 VXL (67076-4)

Chassis Assembly

REV 200922-R17

See Parts List for a complete listing of optional accessories.

Specifications on this page are subject to change without notice. Every attempt has been made to ensure the accuracy of this drawing; however, Traxxas cannot be held responsible for typographical or other errors.

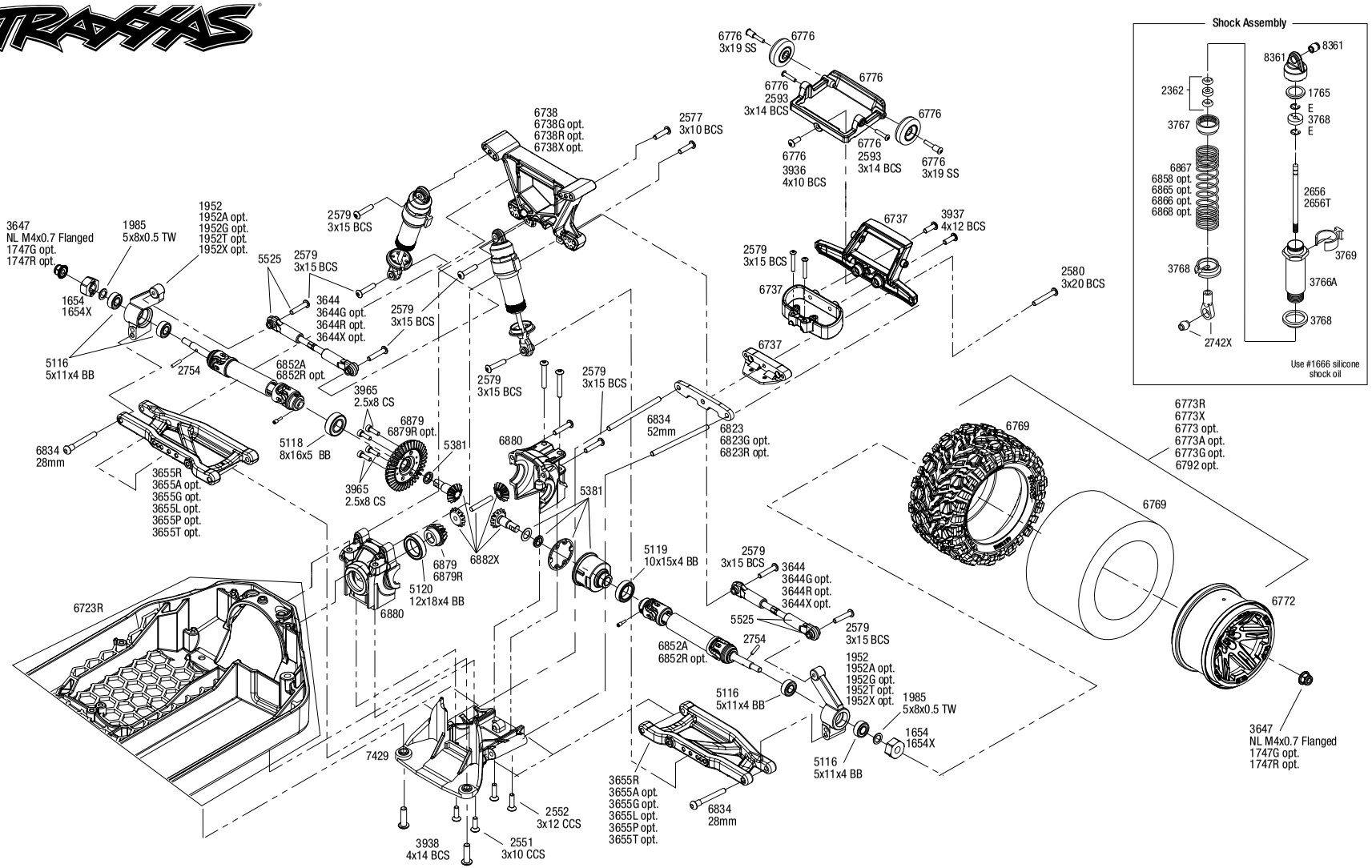

RUSTLER 4X4 VXL BRUSHLESS

Rear Assembly

See Parts List for a complete listing of optional accessories.

REV 200922-R17

Specifications on this page are subject to change without notice. Every attempt has been made to ensure the accuracy of this drawing; however, Traxxas cannot be held responsible for typographical or other errors.

RUSTLER 4X4 VXL (67076-4)

Transmission Assembly

REV 200922-R17

Specifications on this page are subject to change without notice. Every attempt has been made to ensure the accuracy of this drawing; however, Traxxas cannot be held responsible for typographical or other errors.

See Parts List for a complete listing of optional accessories.

Questions? **Call toll-free, 1-888-TRAXXAS**

Driveshaft Assembly

Driveshafts

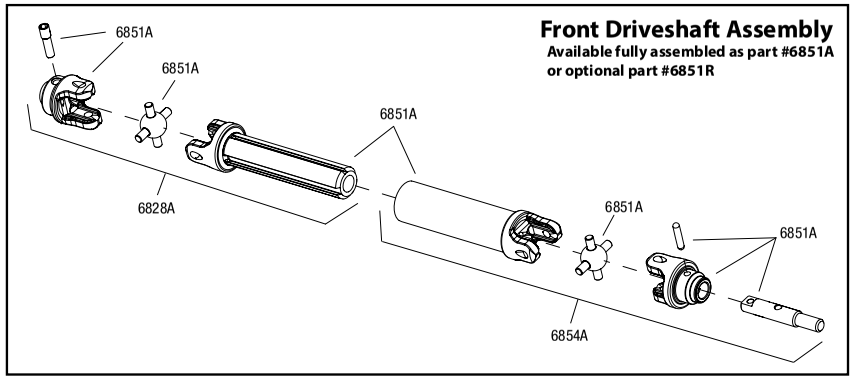

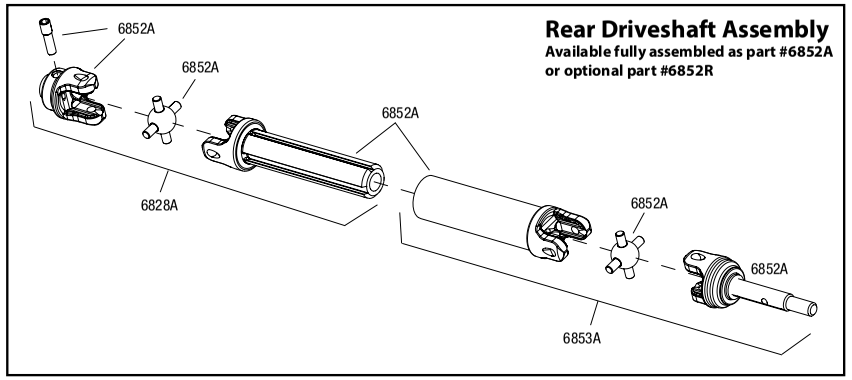

Modular Assembly

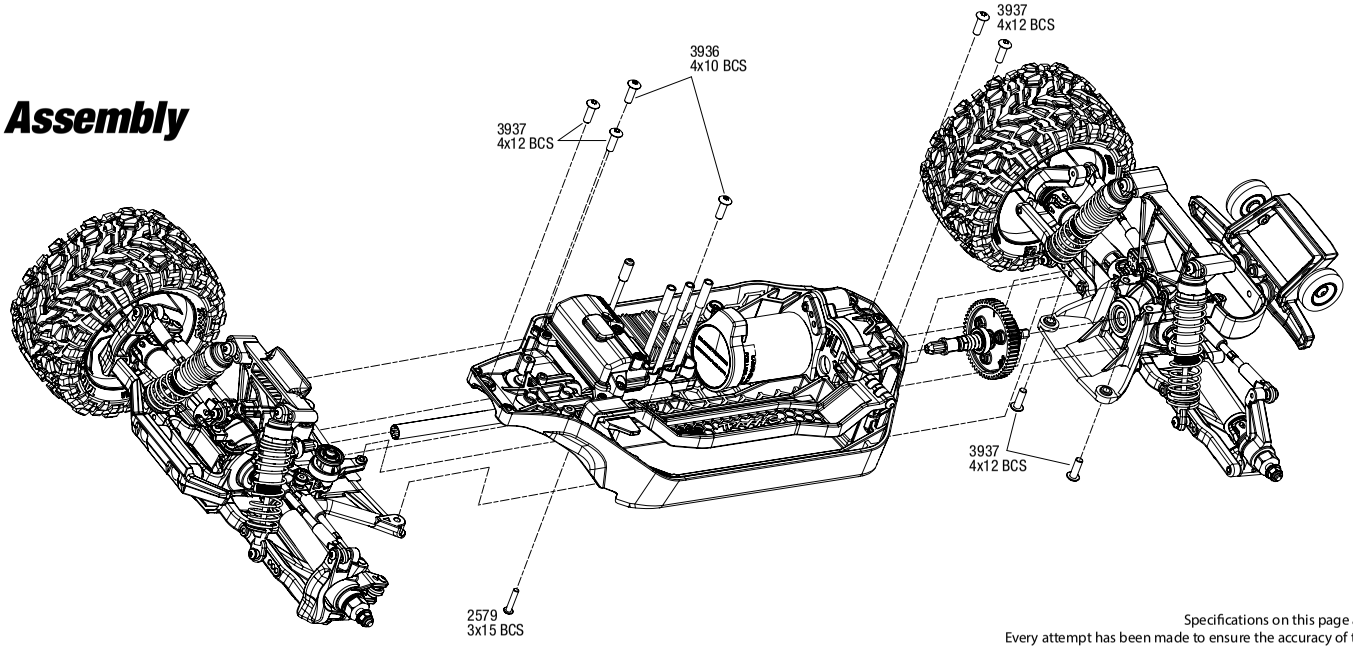

REV 200922-R17

Specifications on this page are subject to change without notice.
Every attempt has been made to ensure the accuracy of this drawing, however Traxxas cannot
be held responsible for typographical or other errors. See Parts List for a complete listing of optional accessories.

RUSTLER 4X4 VXL BRUSHLESS

Body Assembly

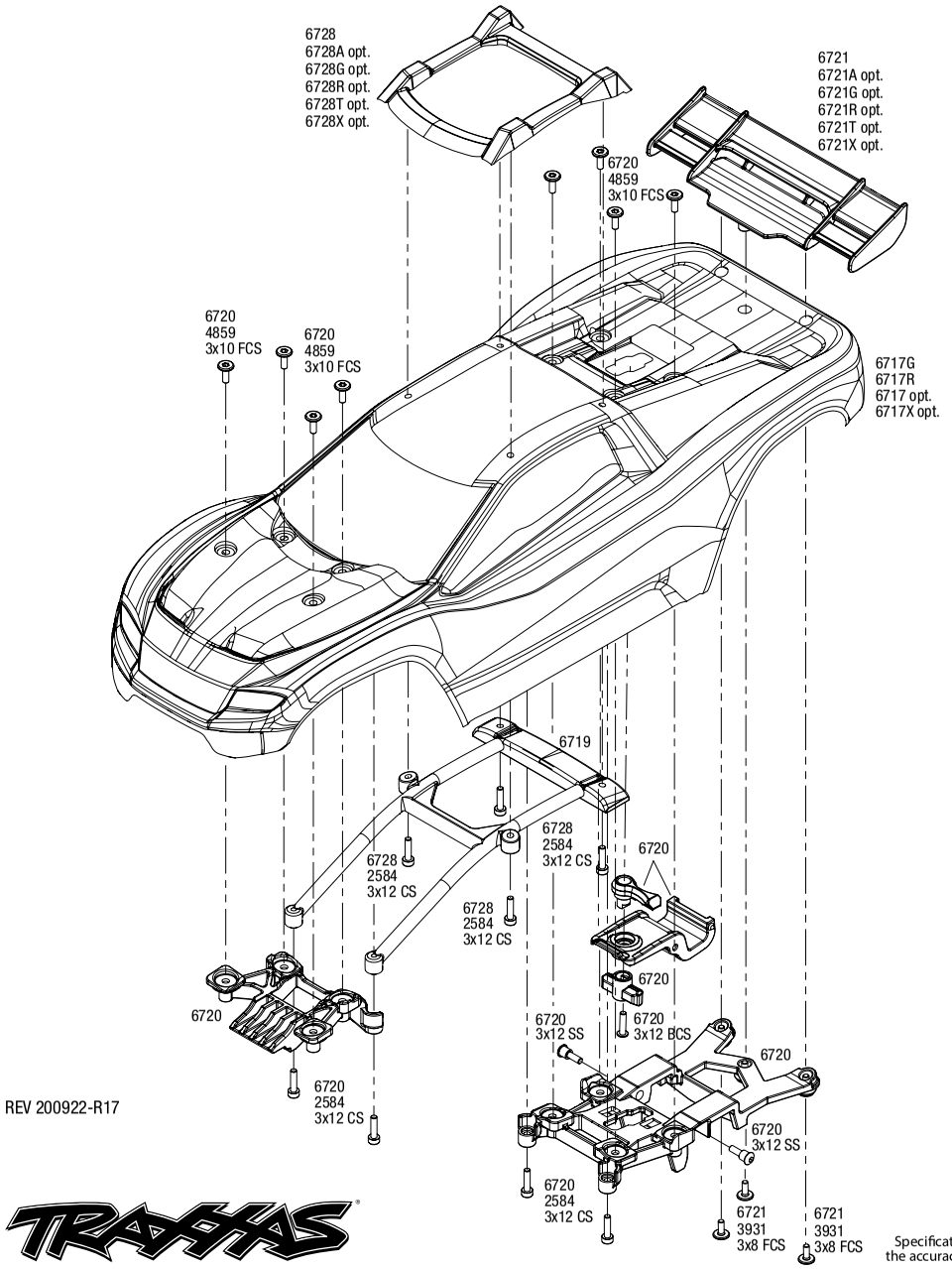

REV 200922-R17

Completed Assembly (view from bottom)

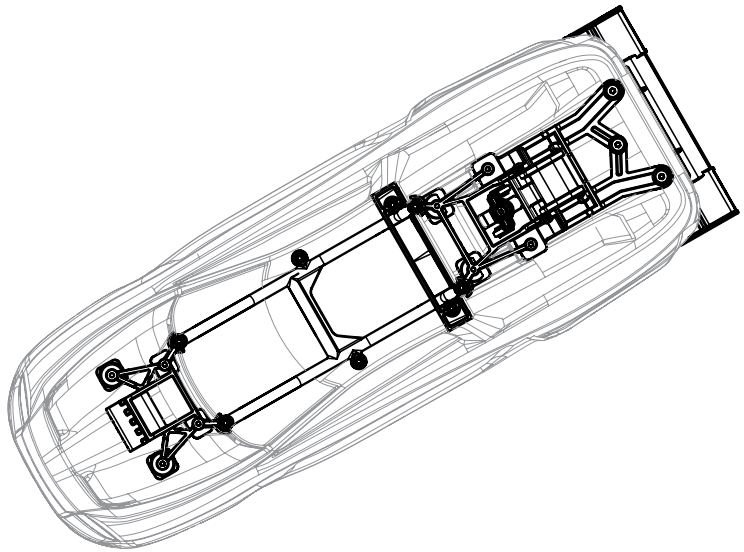

Specifications on this page are subject to change without notice. Every attempt has been made to ensure the accuracy of this drawing; however, Traxxas cannot be held responsible for typographical or other errors.

See Parts List for a complete listing of optional accessories.

PARTS SHOWN IN BOLD ARE OPTIONAL ACCESSORIES.

Part categories and individual part listings are arranged alphabetically.

Bearings & Bushings

4607 **Ball bearings (5x11x4mm) (8)**
4612 **Ball bearings (10x15x4mm) (2)**
2728 **Ball bearings (5x8x2.5mm) (2)**
5119A Ball bearings, black rubber sealed (10x15x4mm) (2)
5119 Ball bearings, blue rubber sealed (10x15x4mm) (2)
5120 Ball bearings, blue rubber sealed (12x18x4mm) (2)
5116 Ball bearings, blue rubber sealed (5x11x4mm) (2)
5114 Ball bearings, blue rubber sealed (5x8x2.5mm) (2)
5117 Ball bearings, blue rubber sealed (6x12x4mm) (2)
5118 Ball bearings, blue rubber sealed (8x16x5mm) (2)
1985 PTFE-coated washers, 5x8x0.5mm (20) (use with ball bearings)

Body & Accessories

1926 Antenna caps, vinyl (2)/ antenna spool
1726 Antenna, tube (1)/ vinyl antenna cap (1)/ wire retainer (1)
6720 Body mounts, front & rear/ 3x12mm CS (4)/ 3x12mm shoulder screw (2)/ 3x10mm flat-head machine screw (8)/ 3x12mm BCS (1)
6710 **Body reinforcement set (fits #6717 body)**
6719 Body support/ 3x12mm CS (4)
6717 **Body, Rustler® 4X4 (clear, requires painting)/ window, grille, lights decal sheet**
6717G Body, Rustler® 4X4 VXL, green/ window, grille, lights decal sheet (assembled with front & rear body mounts and rear body support for clipless mounting)
6717R Body, Rustler® 4X4 VXL, red/ window, grille, lights decal sheet (assembled with front & rear body mounts and rear body support for clipless mounting)
6717X **Body, Rustler® 4X4, silver/ window, grille, lights decal sheet (assembled with front & rear body mounts and rear body support for clipless mounting)**
2514 **Decal sheet, racing sponsors**
9950 **Official Team Traxxas® racing decal set (flag logo/ 6-color)**
6728X **Skid plate, roof (body) (blue)/ 3x12mm CS (4)**
6728G **Skid plate, roof (body) (green)/ 3x12 CS (4)**
6728T **Skid plate, roof (body) (orange)/ 3x12 CS (4)**
6728R **Skid plate, roof (body) (red)/ 3x12mm CS (4)**
6728A **Skid plate, roof (body) (white)/ 3x12 CS (4)**
6728 Skid plate, roof (body)/ 3x12mm CS (4)
6721 Wing, Rustler® 4X4 (black)/ 3x8mm FCS (3)
6721X **Wing, Rustler® 4X4 (blue)/ 3x8 FCS (3)**
6721G **Wing, Rustler® 4X4 (green)/ 3x8 FCS (3)**
6721T **Wing, Rustler® 4X4 (orange)/ 3x8 FCS (3)**
6721R **Wing, Rustler® 4X4 (red)/ 3x8 FCS (3)**
6721A **Wing, Rustler® 4X4 (white)/ 3x8 FCS (3)**

Center Driveline

5119A Ball bearings, black rubber sealed (10x15x4mm) (2)
5119 Ball bearings, blue rubber sealed (10x15x4mm) (2)
5120 Ball bearings, blue rubber sealed (12x18x4mm) (2)
5116 Ball bearings, blue rubber sealed (5x11x4mm) (2)
5117 Ball bearings, blue rubber sealed (6x12x4mm) (2)
6893G **Bearing adapter, 6061-T6 aluminum (green-anodized) (1)/ 10x15x4mm ball bearing (black rubber sealed) (1) (for slipper shaft)**
6893X **Bearing adapter, 6160-T6 aluminum (blue-anodized) (1)/10x15x4mm ball bearing (blue rubber sealed) (1) (for slipper shaft)**
7477 Cover, gear/ wire retainer
6814 Differential kit, center (complete)
6888 Drive hub, center, rear (1)/ 4x3 GS (1)
6888X Drive hub, front, hardened steel (1)/ screw pin (1)
6883 **Gear set, center differential (output gears (2)/ spider gears (2)/ spider gear shaft)**
5148 Grease, white lithium
6884 **Housing, center differential/ x-ring gaskets (2)/ ring gear gasket/ bushings (2)/ 5x10x0.5 TW (2)/ CCS 2.5x8 (4)**
6893 Input shaft (slipper shaft)/ bearing adapter (1)/pin (1)
7460A Motor mount (assembled with 3x6 flat-head machine screw)/ 3.0mm NL (1)
7460R **Motor mount, 6061-T6 aluminum (blue-anodized)**
7490 Plate, motor
7490G **Plate, motor, green**
7490A **Plate, motor, orange**
7490R **Plate, motor, red**
5352R Rebuild kit (heavy duty), slipper clutch (steel disc/ aluminum friction pads (3)/ spring (1)/ 2x9.8mm pin/ 5x8mm MW/ 5.0mm NL (1)/ 4.0mm NL (1))
5352X **Rebuild kit, slipper clutch (steel disc/ friction pads (3)/ spring (2)/ 2x9.8mm pin/ 5x8mm MW/ 5.0mm NL (1)/ 4.0mm NL (1))**
5552X **Rebuild kit, slipper clutch (steel disc/ friction pads (3)/ spring (2)/ pin/ 4.0mm NL (1)/ 5.0mm NL (1))**
2575 Screws, 3x6mm button-head machine (hex drive) (6)
2554 Screws, 3x6mm cap-head machine (hex drive) (6)
3932 Screws, 3x6mm flat-head machine (hex drive) (6)
1647 Silicone grease
6878 **Slipper clutch, complete**
5556 **Slipper pressure plate & hub (aluminum alloy)**
5351 Slipper pressure plate and hub (alloy)

Chassis & Attachments

6726X Battery hold-down (3)/ battery clip/ hold-down post/ screw pin/ pivot post screw
6724 Box, receiver (sealed)/ foam pad/ 2.5x8mm CS (4)/ 3x10mm CS (2)
6736 Bumper, front/ bumper support
6737 Bumper, rear/ bumper mount, rear
6723R Chassis (162mm long battery compartment) (fits flat style battery packs) (use only with #7430R front bulkhead & #6726X battery hold-down)
6730X **Chassis brace kit, blue (fits Rustler® 4X4 or Slash 4X4 models equipped with Low-CG chassis)**
6730G **Chassis brace kit, green (fits Rustler® 4X4 or Slash 4X4 models equipped with Low-CG chassis)**
6730A **Chassis brace kit, orange (fits Rustler® 4X4 or Slash 4X4 models equipped with Low-CG chassis)**
6730R **Chassis brace kit, red (fits Rustler® 4X4 or Slash 4X4 models equipped with Low-CG chassis)**
6725 **Hold down, battery (for use with 30mm height and shorter battery packs)**
6776 Wheelie bar

Differential Components

5119 Ball bearings, blue rubber sealed (10x15x4mm) (2)
5117 Ball bearings, blue rubber sealed (6x12x4mm) (2)
5118 Ball bearings, blue rubber sealed (8x16x5mm) (2)
5381 Carrier, differential/ x-ring gaskets (2)/ ring gear gasket/ 6x10x0.5 TW
6780 **Differential kit, center (complete)**
5136X **Differential oil kit (1 each: 10K, 30K, 50K weights)**
6783 **Gear set, center differential (output gears (2)/ spider gears (4)/ spider gear shaft (2))**
6882X Gear set, differential (output gears (2)/ spider gears (2)/ spider gear shaft, carrier support)
6781 **Housing, center differential (aluminum)/ x-ring gaskets (2)/ ring gear gasket/ bushings (2)/ 5x10x0.5mm PTFE-coated washers (2)/ 2.5x8 CCS (4)**
6881 Housings, differential, front
6880 Housings, differential, rear
6782 **Output gears, center differential, hardened steel (2)**
5379X Ring gear, differential/ pinion gear, differential
5379R **Ring gear, differential/ pinion gear, differential (machined, spiral cut) (front)**
6879R **Ring gear, differential/ pinion gear, differential (machined, spiral cut) (rear)**
6879 Ring gear, differential/ pinion gear, differential (rear)
3965 Screws, 2.5x8mm cap-head machine (6)
1647 Silicone grease

Driveline Components

5119A Ball bearings, black rubber sealed (10x15x4mm) (2)
5119 Ball bearings, blue rubber sealed (10x15x4mm) (2)
5116 Ball bearings, blue rubber sealed (5x11x4mm) (2)
9059X **Cross pin (2)/ drive pin (2) (repairs 2 axle shafts)**
6758 **Differential output shaft (for steel constant-velocity driveshafts) (2)**
9057X **Differential output shafts, steel-splined constant-velocity (2)**
6828A **Differential output yoke assembly, extreme heavy duty (2) (left or right, front or rear) (assembled with external-splined half shaft)**
6851A Driveshaft assembly, front, extreme heavy duty (1) (left or right) (fully assembled, ready to install)/ screw pin (1)
6852A Driveshaft assembly, rear, extreme heavy duty (1) (left or right) (fully assembled, ready to install)/ screw pin (1)
6765 Driveshaft, center, 6061-T6 aluminum (blue-anodized) (189mm)
6765G **Driveshaft, center, 6061-T6 aluminum (green-anodized) (189mm)**

RUSTLER 4X4 VXL (67076-4)

6765A **Driveshaft, center, 6061-T6 aluminum (orange-anodized) (189mm)**
6765R **Driveshaft, center, 6061-T6 aluminum (red-anodized) (189mm)**
6767 **Driveshaft, center, plastic, (black)/ screw pin**
6851R **Driveshafts, front, steel-spline constant-velocity (complete assembly) (2)**
9051X **Driveshafts, front, steel-spline constant-velocity (complete assembly) (2)**
6852R **Driveshafts, rear, steel-spline constant-velocity (complete assembly) (2)**
9052X **Driveshafts, rear, steel-spline constant-velocity (complete assembly) (2)**
9055X **Half shaft, external splined (steel-spline constant velocity) (1)**
6750 **Half shaft, external splined (steel-spline constant-velocity) (1)**
9056X **Half shaft, internal splined (steel-spline constant velocity) (1)**
6751 **Half shaft, internal splined (steel-spline constant-velocity) (1)**
6757 **Rebuild kit, steel-splined constant-velocity driveshafts (includes pins, dustboots, lube, and hardware)**
9058X **Rebuild kit, steel-splined constant-velocity driveshafts (includes pins, lube, and hardware for two axle shafts)**
6854A **Stub axle assembly, front, outer, extreme heavy duty (1) (left or right) (assembled with internal-splined half shaft)**
6853A **Stub axle assembly, rear, outer, extreme heavy duty (1) (left or right) (assembled with internal-splined half shaft)**
6754 **Stub axle, front, 5mm (steel-splined constant-velocity driveshaft) (1)**
9054X **Stub axle, front, steel-splined constant velocity (1)**
6753 **Stub axle, rear, 5mm (steel-splined constant-velocity driveshaft) (1)**
9053X **Stub axle, rear, steel-splined constant velocity (1)**

Front Suspension & Steering

2728 **Ball bearings (5x8x2.5mm) (2)**
5114 Ball bearings, blue rubber sealed (5x8x2.5mm) (2)
6823 Bulkhead tie bars, front & rear, aluminum (blue-anodized)
7430R Bulkhead, front (for use only with #6723R chassis)
3643X **Camber links, front (TUBES blue-anodized, 7075-T6 aluminum, stronger than titanium) (83mm) (2)/ rod ends (4)/ aluminum wrench (1) (#2579 3x15 BCS (4) required for installation)**
3643G **Camber links, front (TUBES green-anodized, 7075-T6 aluminum, stronger than titanium) (83mm) (2)/ rod ends (4)/ aluminum wrench (1) (#2579 3x15 BCS (4) required for installation)**
3643R **Camber links, front (TUBES red-anodized, 7075-T6 aluminum, stronger than titanium) (83mm) (2)/ rod ends (4)/ aluminum wrench (1) (#2579 3x15 BCS (4) required for installation)**
6832X **Caster blocks (c-hubs), 6061-T6 aluminum (blue-anodized), left & right**
6832G **Caster blocks (c-hubs), 6061-T6 aluminum (green-anodized), left & right**
6832A **Caster blocks (c-hubs), 6061-T6 aluminum (orange-anodized), left & right**
6832R **Caster blocks (c-hubs), 6061-T6 aluminum (red-anodized), left & right**
6832 Caster blocks (c-hubs), left & right
6845A **Drag link, machined 6061-T6 aluminum (blue-anodized)**
6845G **Drag link, machined 6061-T6 aluminum (green-anodized)**
6845T **Drag link, machined 6061-T6 aluminum (orange-anodized)**
6845R **Drag link, machined 6061-T6 aluminum (red-anodized)**
6851A Driveshaft assembly, front, extreme heavy duty (1) (left or right) (fully assembled, ready to install)/ screw pin (1)
6851R **Driveshafts, front, steel-spline constant-velocity (complete assembly) (2)**
7438 Linkage, steering
6739 Shock tower, front
6739X **Shock tower, front, 7075-T6 aluminum (blue-anodized) (1)/ body mount bracket (1)**
6739G **Shock tower, front, 7075-T6 aluminum (green-anodized) (1)/ body mount bracket (1)**
6739R **Shock tower, front, 7075-T6 aluminum (red-anodized) (1)/ body mount bracket (1)**
6845X Steering bellcranks/ servo saver/ servo saver spring/ servo spring retainer/servo horn, steering
6837X **Steering blocks, 6061-T6 aluminum (blue-anodized), left & right**
6837 Steering blocks, left & right
6854A **Stub axle assembly, front, outer, extreme heavy duty (1) (left or right) (assembled with internal-splined half shaft)**
6754 **Stub axle, front, 5mm (steel-splined constant-velocity driveshaft) (1)**
3655P **Suspension arms, blue, front/rear (left & right), heavy duty (2)**
3655R Suspension arms, front/rear (left & right), heavy duty (2)
3655G **Suspension arms, green, front/rear (left & right), heavy duty (2)**
3655T **Suspension arms, orange, front/rear (left & right), heavy duty (2)**
3655L **Suspension arms, red, front/rear (left & right), heavy duty (2)**
3655A **Suspension arms, white, front/rear (left & right), heavy duty (2)**
6834 Suspension pin set, complete (front and rear)
6898 **Sway bar kit (front and rear) (includes front and rear sway bars and adjustable linkage)**
3643 Turnbuckles, camber link, 49mm (82mm center to center) (assembled with rod ends and hollow balls) (1 left, 1 right)
5539 Turnbuckles, camber links, 58mm (assembled with rod ends and hollow balls) (2)

Hardware

1926 Antenna caps, vinyl (2)/ antenna spool
1726 Antenna, tube (1)/ vinyl antenna cap (1)/ wire retainer (1)
1552 Screws, 3x8mm cap-head machine (hex drive) (6)/washers (6)/ wrench
3935 Body clip (mounting clip), angled, 90-degrees (10)
3935A **Body clip (mounting clip), angled, 90-degrees (black) (10)**
3934 Body clips, heavy duty (12)
1589 Double-sided adhesive tape (25mm x 25mm) (2)
2586 Screws, 3x15mm cap-head machine (hex drive) (6)
2745 Nuts, 3mm nylon locking (12)
3647 Nuts, 4mm flanged nylon locking (steel, serrated) (8)
1747 Nuts, 4mm nylon locking (10)
1747A **Nuts, aluminum, flanged, serrated (4mm) (red-anodized) (4)**
1985 PTFE-coated washers, 5x8x0.5mm (20) (use with ball bearings)
5525 Rod ends (12)/ hollow balls (12)
2742X Rod ends, short (6)/ hollow balls (6)
3347 Screws, 2.5x5mm button-head machine (hex drive) (6)
3215 Screws, 2.5x6mm cap-head machine (hex drive) (6)
3965 Screws, 2.5x8mm cap-head machine (6)
2577 Screws, 3x10mm button-head machine (hex drive) (6)
2578 Screws, 3x12mm button-head machine (hex drive) (6)
2552 Screws, 3x12mm countersunk machine (6) (hex drive)
2579 Screws, 3x15mm button-head machine (hex drive) (6)
3646 Screws, 3x15mm flat-head machine (hex drive) (6)
2583 Screws, 3x18mm button-head machine (hex drive) (6)
2580 Screws, 3x20mm button-head machine (hex drive) (6)
2591 Screws, 3x23mm button-head machine (hex drive) (6)
2582 Screws, 3x30mm button-head machine (hex drive) (6)
2592 Screws, 3x40mm button-head machine (hex drive) (6)
2575 Screws, 3x6mm button-head machine (hex drive) (6)
2534 Screws, 3x6mm countersunk machine (6) (hex drive)
3932 Screws, 3x6mm flat-head machine (hex drive) (6)
2576 Screws, 3x8mm button-head machine (hex drive) (6)
3931 Screws, 3x8mm flat-head machine (hex drive) (6)
3936 Screws, 4x10mm button-head machine (hex drive) (6)
3937 Screws, 4x12mm button-head machine (hex drive) (6)
2542 Screws, 4x12mm countersunk machine (hex drive) (6)
3938 Screws, 4x14mm button-head machine (hex drive) (6)
2546 Screws, 4x15mm countersunk machine (hex drive) (6)
2743 Set (grub) screws, 3mm hardened (12)
3642X Shoulder screws, Ultra Shocks (3x12 hex drive) (6)
2754 Stub axle pins (4)
2748X Tool Set (1.5mm &2.5mm allens/ 4-way lug, 8mm &4mm wrench & U-joint wrenches)
2746 Washers, 3x6mm metal (12)

LED Lights

6588 **Accessory power supply (regulated, 3V, 3 amp)/ power tap connector (with cable)/ 3x10 BCS (2)/ 2.6x8 BCS (2)**
6797 **Bumper, front (with LED lights) (replacement for #6736 front bumper)**
6795 **LED light set, complete (includes bumper with LED lights, roof skid plate with LED lights, 3-volt accessory power supply, and power tap connector (with cable)) (fits #6717 body)**
6796 **Skid plate, roof (body) (with LED lights) (fits #6717 body)**

Motors & Electronics

1726 Antenna, tube (1)/ vinyl antenna cap (1)/ wire retainer (1)
2260 **BEC assembly (complete)**
3340 **Cooling fan, Velineon® VXL-3s ESC**
6790 Gear adapter, fixed, Rustler® 4X4
2072A Gear set (for 2070, 2075 servos)
2072X **Gear set, metal (for 2070, 2075 servos)**
2252 **Gear set, metal (for 2250, 2255 servos)**
2072R **Gear set, metal, high speed (for 2070, 2075 servos)**
3354R Motor cover, endbell (Velineon® 3500)
7460A Motor mount (assembled with 3x6 flat-head machine screw)/ 3.0mm NL (1)
7460R **Motor mount, 6061-T6 aluminum (blue-anodized)**
3351R Motor, Velineon® 3500, brushless (assembled with 12-gauge wire and gold-plated bullet connectors)
7490 Plate, motor
7490G **Plate, motor, green**

7490A **Plate, motor, orange**
7490R **Plate, motor, red**
3352R Rebuild kit, Velineon® 3500 (includes plastic endbell, 5x11x4mm ball bearings (2), 2.5x5mm BCS (with threadlock) (4), rear bushing)
3347 Screws, 2.5x5mm button-head machine (hex drive) (6)
3932 Screws, 3x6mm flat-head machine (hex drive) (6)
2254 **Servo case, aluminum (blue-anodized) (middle) (for 2250 servo)**
2253 **Servo case, aluminum (red-anodized) (middle) (for 2255 servo)**
2251 **Servo case, plastic (top, middle, bottom)/ gaskets/ hardware (for 2250, 2255 servos)**
2074 Servo case/gaskets (for 2056 and 2075 waterproof servos)
2075R **Servo, digital high-speed, metal gear (ball bearing), waterproof**
2075 Servo, digital high-torque (ball bearing), waterproof
2250 **Servo, digital high-torque 330 coreless, metal gear (ball bearing), waterproof**
2255 **Servo, digital high-torque 400 brushless, metal gear (ball bearing), waterproof**
2075X **Servo, digital high-torque, metal gear (ball bearing), waterproof**
3350R Velineon® VXL-3s Brushless Power System, waterproof (includes VXL-3s waterproof ESC, Velineon 3500 motor, and speed control mounting plate (part #3725R))
3355R Velineon® VXL-3s Electronic Speed Control, waterproof (brushless) (fwd/rev/brake)

Radio System, Batteries & Chargers

2849X **4000mAh 11.1v 3-Cell 25C LiPo Battery**
2872X **5000mAh 11.1v 3-Cell 25C LiPo Battery**
2842X **5000mAh 7.4v 2-Cell 25C LiPo Battery**
2843X **5800mAh 7.4v 2-Cell 25C LiPo Battery**
2857X **6400mAh 11.1v 3-Cell 25C LiPo Battery**
2869X **7600mAh 7.4v 2-Cell 25C LiPo Battery**
2976 **AC to DC converter, 40W**
2938X **Adapter, Traxxas® iD® LiPo battery (adapts Traxxas iD batteries to separate balance ports)**
2943 **Battery charge indicators (green (4), blue (4), grey (4))**
6548 Battery door, transmitter (replacement for #6516, 6517, 6528, 6529, 6530 transmitters)
2914 **Battery, Power Cell AA Alkaline (4)**
2923X **Battery, Power Cell, 3000mAh (NiMH, 7-C flat, 8.4V)**
2926X **Battery, Power Cell, 3000mAh (NiMH, 7-C hump, 8.4V)**
2940X **Battery, Series 3 Power Cell, 3300mAh (NiMH, 7-C flat, 8.4V)**
2941X **Battery, Series 3 Power Cell, 3300mAh (NiMH, 7-C hump, 8.4V)**
2950X **Battery, Series 4 Power Cell, 4200mAh (NiMH, 7-C flat, 8.4V)**
2951X **Battery, Series 4 Power Cell, 4200mAh (NiMH, 7-C hump, 8.4V)**
2960X **Battery, Series 5 Power Cell, 5000mAh (NiMH, 7-C flat, 8.4V)**
2961X **Battery, Series 5 Power Cell, 5000mAh (NiMH, 7-C hump, 8.4V)**
2983 **Battery/charger completer pack (includes #2969 2-amp NiMH peak detecting AC charger (1), #2923X 3000mAh 8.4V 7-cell NiMH battery (1))**
2992 **Battery/charger completer pack (includes #2970 iD® charger (1), #2843X 5800mAh 7.4V 2-cell 25C LiPo battery (1))**
2994 **Battery/charger completer pack (includes #2970 iD® charger (1), #2849X 4000mAh 11.1v 3-Cell 25C LiPo Battery (1))**
2260 **BEC assembly (complete)**
2975 **Charger, DC, 4 amp (6 - 7 cell, 7.2 - 8.4 volt, NiMH)**
2972 **Charger, EZ-Peak® Dual, 100W, NiMH/LiPo with iD® Auto Battery Identification**
2973 **Charger, EZ-Peak® Live Dual, 200W, NiMH/LiPo with iD® Auto Battery Identification**
2971 **Charger, EZ-Peak® Live, 100W, NiMH/LiPo with iD® Auto Battery Identification**
2970 **Charger, EZ-Peak® Plus, 4 amp, NiMH/LiPo with iD® Auto Battery Identification**
6525 **Communication link, telemetry expander**
6541 **Connector, power tap (with cable) (long)/ wire tie**
2978 **Fuse, charger, 5A (2) (for #2974, 2975, 2977)**
2072A Gear set (for 2070, 2075 servos)
2072X **Gear set, metal (for 2070, 2075 servos)**
2252 **Gear set, metal (for 2250, 2255 servos)**
2072R **Gear set, metal, high speed (for 2070, 2075 servos)**
2968X **LiPo cell voltage checker/balancer (includes #2938X adapter for Traxxas® iD® batteries)**
2968 **LiPo cell voltage checker/balancer (requires #2938X adapter for Traxxas® iD® batteries)**
6535 **Mount, temperature sensor (electric motors)/ wire tie/ thermal pad**
6533 Receiver, micro, TQi 2.4GHz with telemetry & TSM (5-channel)
3932 Screws, 3x6mm flat-head machine (hex drive) (6)
6552 **Seal kit, expander box (includes o-ring, seals, and silicone grease)**
6526 **Sensor, auto-detectable, temperature**
6527 **Sensor, auto-detectable, voltage**
6520 **Sensor, RPM (long)/ 3x4mm BCS (2)/ 3x4 GS (1)**
6521 **Sensor, temperature and voltage (long)**
2254 **Servo case, aluminum (blue-anodized) (middle) (for 2250 servo)**
2253 **Servo case, aluminum (red-anodized) (middle) (for 2255 servo)**
2251 **Servo case, plastic (top, middle, bottom)/ gaskets/ hardware (for 2250, 2255 servos)**
2074 Servo case/gaskets (for 2056 and 2075 waterproof servos)
2075R **Servo, digital high-speed, metal gear (ball bearing), waterproof**
2075 Servo, digital high-torque (ball bearing), waterproof
2250 **Servo, digital high-torque 330 coreless, metal gear (ball bearing), waterproof**
2255 **Servo, digital high-torque 400 brushless, metal gear (ball bearing), waterproof**
2075X **Servo, digital high-torque, metal gear (ball bearing), waterproof**
6553X **Telemetry expander 2.0 and GPS module 2.0, TQi radio system**
6550X **Telemetry expander 2.0, TQi radio system (for use only with #6551X GPS module)**
6551X **Telemetry GPS module 2.0, TQi radio system (for use only with #6550X telemetry expander)**
6538 **Telemetry trigger magnet holders, spur gear/ magnet, 5x2mm (1)/ 3x8mm CCS (3)/ 3x10mm CCS (3)**
6540 **Telemetry trigger magnet, 5X2mm (1)**
6509R TQi 2.4 GHz High Output radio system, 2-channel, Traxxas Link™ enabled, TSM (2-ch transmitter, 5-ch micro receiver)
6507R **TQi 2.4 GHz High Output radio system, 4-channel with Traxxas Link™ Wireless Module, TSM (4-ch transmitter, 5-ch micro receiver)**
6528 Transmitter, TQi Traxxas Link™ enabled, 2.4GHz high output, 2-channel (transmitter only)
6529 **Transmitter, TQi Traxxas Link™ enabled, 2.4GHz high output, 3-channel (transmitter only)**
6530 **Transmitter, TQi Traxxas Link™ enabled, 2.4GHz high output, 4-channel (transmitter only)**
6511 **Traxxas Link™ Wireless Module**
3355R Velineon® VXL-3s Electronic Speed Control, waterproof (brushless) (fwd/rev/brake)

Ready-To-Race Model

67076-4 Rustler® 4X4 VXL: 1/10 Scale Stadium Truck with TQi Traxxas Link™ Enabled 2.4GHz Radio System & Traxxas Stability Management (TSM)®

Rear Suspension

6823 Bulkhead tie bars, front & rear, aluminum (blue-anodized)
7429 Bulkhead, rear
3644X **Camber links, rear (TUBES blue-anodized, 7075-T6 aluminum, stronger than titanium) (73mm) (2)/ rod ends (4)/ aluminum wrench (1) (#2579 3x15 BCS (4) required for installation)**
3644G **Camber links, rear (TUBES green-anodized 7075-T6 aluminum, stronger than titanium) (73mm) (2)/ rod ends (4)/ aluminum wrench (1) (#2579 3x15 BCS (4) required for installation)**
3644R **Camber links, rear (TUBES red-anodized, 7075-T6 aluminum, stronger than titanium) (73mm) (2)/ rod ends (4)/ aluminum wrench (1) (#2579 3x15 BCS (4) required for installation)**
1952X **Carriers, stub axle (blue-anodized 6061-T6 aluminum) (rear) (2)**
1952G **Carriers, stub axle (green-anodized 6061-T6 aluminum) (rear) (2)**
1952T **Carriers, stub axle (orange-anodized 6061-T6 aluminum) (rear) (2)**
1952 Carriers, stub axle (rear) (2)
1952A **Carriers, stub axle (red-anodized 6061-T6 aluminum) (rear) (2)**
6852A Driveshaft assembly, rear, extreme heavy duty (1) (left or right) (fully assembled, ready to install)/ screw pin (1)
6852R **Driveshafts, rear, steel-spline constant-velocity (complete assembly) (2)**
6738 Shock tower, rear
6738X **Shock tower, rear, 7075-T6 aluminum (blue-anodized) (1)/ body mount bracket (1)**
6738G **Shock tower, rear, 7075-T6 aluminum (green-anodized) (1)/ body mount bracket (1)**
6738R **Shock tower, rear, 7075-T6 aluminum (red-anodized) (1)/ body mount bracket (1)**
6853A **Stub axle assembly, rear, outer, extreme heavy duty (1) (left or right) (assembled with internal-splined half shaft)**
3655P **Suspension arms, blue, front/rear (left & right), heavy duty (2)**
3655R Suspension arms, front/rear (left & right), heavy duty (2)
3655G **Suspension arms, green, front/rear (left & right), heavy duty (2)**
3655T **Suspension arms, orange, front/rear (left & right), heavy duty (2)**
3655L **Suspension arms, red, front/rear (left & right), heavy duty (2)**
3655A **Suspension arms, white, front/rear (left & right), heavy duty (2)**
6834 Suspension pin set, complete (front and rear)
6898 **Sway bar kit (front and rear) (includes front and rear sway bars and adjustable linkage)**
3644 Turnbuckles, camber link, 39mm (69mm center to center) (assembled with rod ends and hollow balls) (1 left, 1 right) (fits front & rear on Slash, rear on Slash 4X4)

Shocks (GTR)

7466X	**Body, GTR long (hard-anodized, PTFE-coated aluminum) (1)**
7466	**Body, GTR long shock, aluminum (blue-anodized) (PTFE-coated bodies) (1)**
7466G	**Body, GTR long shock, aluminum (green-anodized) (PTFE-coated bodies) (1)**
7466A	**Body, GTR long shock, aluminum (orange-anodized) (PTFE-coated bodies) (1)**
7467X	**Body, GTR xx-long (hard-anodized, PTFE-coated aluminum) (1)**
7467	**Body, GTR xx-long shock, aluminum (blue-anodized) (PTFE-coated bodies) (1)**
7467G	**Body, GTR xx-long shock, aluminum (green-anodized) (PTFE-coated bodies) (1)**
7467A	**Body, GTR xx-long shock, aluminum (orange-anodized) (PTFE-coated bodies) (1)**
7468	**Caps and spring retainers, GTR long/xx-long shock (upper cap (2)/ hollow balls (4)/ bottom cap (2)/ upper retainer (2)/ lower retainer (2))**
7463	**Rebuild kit, GTR long/xx-long shocks (x-rings, bladders, pistons, piston nuts, shock rod ends, hollow balls) (renews 2 shocks)**
5469	**Rod ends (GTR shocks) (6)**
7464T	**Shaft, GTR long, TiN-coated (2)**
7465T	**Shaft, GTR xx-long, TiN-coated (2)**
7461	**Shocks, GTR long blue-anodized, PTFE-coated bodies with TiN shafts (fully assembled, without springs) (2)**
7461G	**Shocks, GTR long green-anodized, PTFE-coated bodies with TiN shafts (fully assembled, without springs) (2)**
7461X	**Shocks, GTR long hard-anodized, PTFE-coated bodies with TiN shafts (assembled) (2) (without springs)**
7462	**Shocks, GTR xx-long blue-anodized, PTFE-coated bodies with TiN shafts (fully assembled, without springs) (2)**
7462G	**Shocks, GTR xx-long green-anodized, PTFE-coated bodies with TiN shafts (fully assembled, without springs) (2)**
7462X	**Shocks, GTR xx-long hard-anodized, PTFE-coated bodies with TiN shafts (assembled) (2) (without springs)**
7440	**Spring, shock, white (GTR long) (0.623 rate orange) (1 pair)**
7441	**Spring, shock, white (GTR long) (0.653 rate green) (1 pair)**
7444	**Spring, shock, white (GTR long) (0.767 rate black) (1 pair)**
7445	**Spring, shock, white (GTR long) (0.810 rate pink) (1 pair)**
7448	**Spring, shock, white (GTR long) (0.892 rate blue) (1 pair)**
7442	**Spring, shock, white (GTR xx-long) (0.711 rate orange) (1 pair)**
7443	**Spring, shock, white (GTR xx-long) (0.762 rate green) (1 pair)**
7446	**Spring, shock, white (GTR xx-long) (0.874 rate black) (1 pair)**
7447	**Spring, shock, white (GTR xx-long) (0.884 rate pink) (1 pair)**
7449	**Spring, shock, white (GTR xx-long) (1.004 rate blue) (1 pair)**

Shocks (Pro-level Aluminum)

2664	**Big Bore shock cylinder (long) (1)**
2666	**Big Bore shock cylinder (XX-long) (1)**
5862	**Big Bore shocks (hard-anodized & PTFE-coated T6 aluminum) (assembled with TiN shafts and springs) (front & rear) (4)**
2660	**Big Bore shocks (long) (hard-anodized & PTFE-coated T6 aluminum) (assembled with TiN shafts) w/o springs (front) (2)**
2662	**Big Bore shocks (XX-long) (hard-anodized & PTFE-coated T6 aluminum) (assembled with TiN shafts) w/o springs (rear) (2)**
2669	**Piston head set (2-hole (2)/ 3-hole (2))/ shock mounting bushings & washers (2) (Big Bore Shocks)**
2362	**Rebuild kit, Ultra shocks (for 2 shocks)**
1942	Rod ends (16 long & 4 short)/ hollow ball connectors (18)/ ball screws (2)
2742X	Rod ends, short (6)/ hollow balls (6)
2667	**Shock caps, aluminum (Big Bore Shocks) (2)**
1664T	**Shock shafts, hardened steel, titanium nitride coated (long) (2)**
2656T	**Shock shafts, hardened steel, titanium nitride coated (xx-long) (2)**
1664	Shock shafts, steel, chrome finish (long) (2)
2656	Shock shafts, steel, chrome finish (xx-long) (2)
1765	Silicone diaphragms (4)
1666	Silicone shock oil (30 wt)
2668	**Spring retainers, upper & lower (2)/ spring pre-load spacers: 1mm (4)/ 1.5mm (2)/ 2mm (2)/ 4mm (2)/ 8mm (2) (Big Bore Shocks)**
6863	**Springs, front (progressive, +10% rate, pink) (2)**
6864	Springs, front (progressive, +20% rate, blue) (2)
6862	**Springs, front (progressive, -10% rate, green) (2)**
6861	**Springs, front (progressive, -20% rate, orange) (2)**
6857	**Springs, front (white) (progressive rate) (2)**
6867	Springs, rear (progressive, +10% rate, pink) (2)
6868	**Springs, rear (progressive, +20% rate, blue) (2)**
6866	**Springs, rear (progressive, -10% rate, green) (2)**
6865	**Springs, rear (progressive, -20% rate, orange) (2)**
6858	**Springs, rear (white) (progressive rate) (2)**

Shocks (Ultra Shocks)

3642	**Attachment screws, shock (3x12mm shoulder screws) (6)**
3765A	Body, Ultra Shock(s) (long) (grey) (2)
3766A	Body, Ultra Shock(s) (XXL) (grey) (2)
5475	Multi-tool (plastic)
2362	**Rebuild kit, Ultra shocks (for 2 shocks)**
1942	**Rod ends (16 long & 4 short)/ hollow ball connectors (18)/ ball screws (2)**
2742X	Rod ends, short (6)/ hollow balls (6)
3767	Shock caps (2)/ shock bottoms (2)
8361	Shock caps (black) (4) (assembled with hollow balls)
3767A	**Shock caps, aluminum (blue-anodized) (4) (fits all Ultra Shocks)**
3767G	**Shock caps, aluminum (green-anodized) (4) (fits all Ultra Shocks)**
3767P	**Shock caps, aluminum (pink-anodized) (4) (fits all Ultra Shocks)**
3767X	**Shock caps, aluminum (red-anodized) (4) (fits all Ultra Shocks)**
1664T	**Shock shafts, hardened steel, titanium nitride coated (long) (2)**
2656T	**Shock shafts, hardened steel, titanium nitride coated (xx-long) (2)**
1664	**Shock shafts, steel, chrome finish (long) (2)**
2656	Shock shafts, steel, chrome finish (xx-long) (2)
1765	Silicone diaphragms (4)
1666	**Silicone shock oil (30 wt)**
3769	**Spring pre-load spacers: 1mm (4)/ 2mm (2)/ 4mm (2)/ 8mm (2)**
3768	Spring retainers, upper & lower (2)/ piston head set (2-hole (2)/ 3-hole (2))
6863	**Springs, front (progressive, +10% rate, pink) (2)**
6864	Springs, front (progressive, +20% rate, blue) (2)
6862	**Springs, front (progressive, -10% rate, green) (2)**
6861	**Springs, front (progressive, -20% rate, orange) (2)**
6857	**Springs, front (white) (progressive rate) (2)**
6867	Springs, rear (progressive, +10% rate, pink) (2)
6868	**Springs, rear (progressive, +20% rate, blue) (2)**
6866	**Springs, rear (progressive, -10% rate, green) (2)**
6865	**Springs, rear (progressive, -20% rate, orange) (2)**
6858	**Springs, rear (white) (progressive rate) (2)**
3760	**Ultra Shocks (black) (long) (complete w/ spring pre-load spacers & springs) (front) (2)**
3762	**Ultra Shocks (black) (xx-long) (complete w/ spring pre-load spacers & springs) (rear) (2)**
3760A	Ultra Shocks (grey) (long) (complete w/ spring pre-load spacers & springs) (2)
3762A	Ultra Shocks (grey) (xx-long) (complete w/ spring pre-load spacers & springs) (rear) (2)

Slipper Clutch Components

5119A	Ball bearings, black rubber sealed (10x15x4mm) (2)
6893G	**Bearing adapter, 6061-T6 aluminum (green-anodized) (1)/ 10x15x4mm ball bearing (black rubber sealed) (1) (for slipper shaft)**
6893X	**Bearing adapter, 6160-T6 aluminum (blue-anodized) (1)/10x15x4mm ball bearing (blue rubber sealed) (1) (for slipper shaft)**
6888	Drive hub, center, rear (1)/ 4x3 GS (1)
6888X	Drive hub, front, hardened steel (1)/ screw pin (1)
6883	**Gear set, center differential (output gears (2)/ spider gears (2)/ spider gear shaft)**
6884	**Housing, center differential/ x-ring gaskets (2)/ ring gear gasket/ bushings (2)/ 5x10x0.5 TW (2)/ CCS 2.5x8 (4)**
6893	Input shaft (slipper shaft)/ bearing adapter (1)/pin (1)
5352R	Rebuild kit (heavy duty), slipper clutch (steel disc/ aluminum friction pads (3)/ spring (1)/ 2x9.8mm pin/ 5x8mm MW/ 5.0mm NL (1)/ 4.0mm NL (1))
5352X	**Rebuild kit, slipper clutch (steel disc/ friction pads (3)/ spring (2)/ 2x9.8mm pin/ 5x8mm MW/ 5.0mm NL (1)/ 4.0mm NL (1))**
5552X	**Rebuild kit, slipper clutch (steel disc/ friction pads (3)/ spring (2)/ pin/ 4.0mm NL (1)/ 5.0mm NL (1))**
2554	Screws, 3x6mm cap-head machine (hex drive) (6)
6878	**Slipper clutch, complete**
5556	Slipper pressure plate & hub (aluminum alloy)
5351	Slipper pressure plate and hub (alloy)

Spur Gears & Pinion Gears

7477	Cover, gear/ wire retainer
6790	Gear adapter, fixed, Rustler® 4X4
6747	Gear, 11-T pinion (32-p) (steel)/ set screw
3942X	**Gear, 12-T pinion (32-p), heavy duty (machined, hardened steel)/ set screw**
3943X	**Gear, 13-T pinion (32-p), heavy duty (machined, hardened steel)/ set screw**
3944X	**Gear, 14-T pinion (32-p), heavy duty (machined, hardened steel)/ set screw**

3945X **Gear, 15-T pinion (32-p), heavy duty (machined, hardened steel)/ set screw**
3946X **Gear, 16-T pinion (32-p), heavy duty (machined, hardened steel)/ set screw**
3947X **Gear, 17-T pinion (32-p), heavy duty (machined, hardened steel)/ set screw**
3948X **Gear, 18-T pinion (32-p), heavy duty (machined, hardened steel)/ set screw**
3949X **Gear, 19-T pinion (32-p), heavy duty (machined, hardened steel)/ set screw**
3950X **Gear, 20-T pinion (32-p), heavy duty (machined, hardened steel)/ set screw**
3951X **Gear, 21-T pinion (32-p), heavy duty (machined, hardened steel)/ set screw**
3952X **Gear, 22-T pinion (32-p), heavy duty (machined, hardened steel)/ set screw**
6745 **Gear, 9-T pinion (32-p) (steel)/ set screw**
6842 **Spur gear, 50-tooth (0.8 metric pitch, compatible with 32-pitch)**
6842R **Spur gear, 50-tooth (0.8 metric pitch, compatible with 32-pitch) (for center differential)**
6843 **Spur gear, 52-tooth (0.8 metric pitch, compatible with 32-pitch)**
6843R **Spur gear, 52-tooth (0.8 metric pitch, compatible with 32-pitch) (for center differential)**
3956 Spur gear, 54-tooth (0.8 metric pitch, compatible with 32-pitch)
3956R **Spur gear, 54-tooth (0.8 metric pitch, compatible with 32-pitch) (requires #6814 center differential)**
3956X **Spur gear, steel, 54-tooth (0.8 metric pitch, compatible with 32-pitch) (requires #6780 center differential)**

Steering Components

1552 Screws, 3x8mm cap-head machine (hex drive) (6)/washers (6)/ wrench
2728 **Ball bearings (5x8x2.5mm) (2)**
5114 Ball bearings, blue rubber sealed (5x8x2.5mm) (2)
6845A **Drag link, machined 6061-T6 aluminum (blue-anodized)**
6845G **Drag link, machined 6061-T6 aluminum (green-anodized)**
6845T **Drag link, machined 6061-T6 aluminum (orange-anodized)**
6845R **Drag link, machined 6061-T6 aluminum (red-anodized)**
7438 Linkage, steering
2742X Rod ends, short (6)/ hollow balls (6)
6845X Steering bellcranks/ servo saver/ servo saver spring/ servo spring retainer/servo horn, steering
6742 **Toe link, front & rear (molded composite) (2)/ hollow balls (4) (87mm center to center)**
6742X **Toe links (TUBES blue-anodized, 7075-T6 aluminum, stronger than titanium) (87mm) (2)/ rod ends (4)/ aluminum wrench (1)**
6742G **Toe links (TUBES green-anodized, 7075-T6 aluminum, stronger than titanium) (87mm) (2)/ rod ends (4)/ aluminum wrench (1)**
6742R **Toe links (TUBES red-anodized, 7075-T6 aluminum, stronger than titanium) (87mm) (2)/ rod ends (4)/ aluminum wrench (1)**
2746 Washers, 3x6mm metal (12)

Suspension Linkage

3643X **Camber links, front (TUBES blue-anodized, 7075-T6 aluminum, stronger than titanium) (83mm) (2)/ rod ends (4)/ aluminum wrench (1) (#2579 3x15 BCS (4) required for installation)**
3643G **Camber links, front (TUBES green-anodized, 7075-T6 aluminum, stronger than titanium) (83mm) (2)/ rod ends (4)/ aluminum wrench (1) (#2579 3x15 BCS (4) required for installation)**
3643R **Camber links, front (TUBES red-anodized, 7075-T6 aluminum, stronger than titanium) (83mm) (2)/ rod ends (4)/ aluminum wrench (1) (#2579 3x15 BCS (4) required for installation)**
3644X **Camber links, rear (TUBES blue-anodized, 7075-T6 aluminum, stronger than titanium) (73mm) (2)/ rod ends (4)/ aluminum wrench (1) (#2579 3x15 BCS (4) required for installation)**
3644G **Camber links, rear (TUBES green-anodized 7075-T6 aluminum, stronger than titanium) (73mm) (2)/ rod ends (4)/ aluminum wrench (1) (#2579 3x15 BCS (4) required for installation)**
3644R **Camber links, rear (TUBES red-anodized, 7075-T6 aluminum, stronger than titanium) (73mm) (2)/ rod ends (4)/ aluminum wrench (1) (#2579 3x15 BCS (4) required for installation)**
5525 Rod ends (12)/ hollow balls (12)
3739 Screw pin set (Rustler®/ Bandit/ Stampede®)
6834 Suspension pin set, complete (front and rear)
2537 Threaded rods (20/25/44mm 1 ea.)/ (1) 12mm set screw
6742 **Toe link, front & rear (molded composite) (2)/ hollow balls (4) (87mm center to center)**
6742X **Toe links (TUBES blue-anodized, 7075-T6 aluminum, stronger than titanium) (87mm) (2)/ rod ends (4)/ aluminum wrench (1)**
6742G **Toe links (TUBES green-anodized, 7075-T6 aluminum, stronger than titanium) (87mm) (2)/ rod ends (4)/ aluminum wrench (1)**
6742R **Toe links (TUBES red-anodized, 7075-T6 aluminum, stronger than titanium) (87mm) (2)/ rod ends (4)/ aluminum wrench (1)**
3644 Turnbuckles, camber link, 39mm (69mm center to center) (assembled with rod ends and hollow balls) (1 left, 1 right) (fits front & rear on Slash)
3643 Turnbuckles, camber link, 49mm (82mm center to center) (assembled with rod ends and hollow balls) (1 left, 1 right)
5539 Turnbuckles, camber links, 58mm (assembled with rod ends and hollow balls) (2)

Team Traxxas Items

2514 **Decal sheet, racing sponsors**
6160X **DVD, Maxx® Power! Full Throttle Action (sleeve)**
9950 **Official Team Traxxas® racing decal set (flag logo/ 6-color)**
9909 **Traxxas® racing banner, red & black (3x7 feet)**

Tires & Wheels

5116 Ball bearings, blue rubber sealed (5x11x4mm) (2)
3647 Nuts, 4mm flanged nylon locking (steel, serrated) (8)
1747R **Nuts, aluminum, flanged, serrated (4mm) (blue-anodized) (4)**
1985 PTFE-coated washers, 5x8x0.5mm (20) (use with ball bearings)
1647 Silicone grease
2754 Stub axle pins (4)
4175 **Tires & wheels, assembled, glued (2.8") (All-Star black chrome wheels, paddle tires, foam inserts) (nitro rear/ 4WD electric front/rear) (2) (TSM rated)**
6773G **Tires & wheels, assembled, glued (2.8") (RXT 4X4 green wheels, Talon Extreme tires, foam inserts) (4WD electric front/rear, 2WD electric front only) (2) (TSM rated)**
6773X Tires & wheels, assembled, glued (2.8") (RXT black chrome wheels, Talon Extreme tires, foam inserts) (4WD electric front/rear, 2WD electric front only) (2) (TSM rated)
6773 **Tires & wheels, assembled, glued (2.8") (RXT black wheels, Talon Extreme tires, foam inserts) (4WD electric front/rear, 2WD electric front only) (2) (TSM rated)**
6773A **Tires & wheels, assembled, glued (2.8") (RXT orange wheels, Talon Extreme tires, foam inserts) (4WD electric front/rear, 2WD electric front only) (2) (TSM rated)**
6773R Tires & wheels, assembled, glued (2.8") (RXT satin chrome wheels, Talon Extreme tires, foam inserts) (4WD electric front/rear, 2WD electric front only) (2) (TSM rated)
6792 **Tires & wheels, assembled, glued (black 2.8" wheels, Sledgehammer™ tires, foam inserts) (2) (TSM® rated)**
6769 Tires, Talon EXT 2.8" (2)/ foam inserts (2)
1654 Wheel hubs, hex (rear) (2)/ stub axle pins (2)
1654X **Wheel hubs, hex (blue-anodized, lightweight aluminum) (2)/ axle pins(4)**
6772 **Wheels, RXT 2.8" (black) (2)**

Traxxas Tools

3433X **Body reamer (aluminum handle)**
3433 **Body reamer (plastic handle)**
3436 **Cap, body reamer**
3432 **Scissors, curved tip**
3431 **Scissors, straight tip**
8712 **Speed Bit Essentials Set, hex and nut driver, 7-piece, includes premium handle (medium), travel pouch, hex drivers (straight: 1.5mm, 2.0mm, 2.5mm) and nut drivers (5.0mm, 5.5mm, 7.0mm, and 8.0mm), 1/4" drive**
8721 **Speed bit handle, medium (one piece)**
8720 **Speed bit handle, premium, large (rubber overmold)**
8722 **Speed bit handle, premium, medium (rubber overmold)**
8710 **Speed Bit Master Set, hex and nut driver, 13-piece, includes premium handle (medium), travel pouch, hex drivers (straight: 1.5mm, 2.0mm, 2.5mm, 3.0mm), (ball-end: 2.0mm, 2.5mm, 3.0mm), and nut drivers (4.00mm, 4.50mm, 5.00mm, 5.50mm, 7.00mm, 8.00mm),**
8711 **Speed Bit Master Set, hex driver, 7-piece straight and ball end, includes premium handle (medium), travel pouch, hex drivers (straight: 1.5mm, 2.0mm, 2.5mm, 3.0mm) (ball end: 2.0mm, 2.5mm, 3.0mm), 1/4" drive**
8719 **Speed Bit Master Set, nut driver, 6-piece, includes premium handle (medium), travel pouch, and nut drivers (4.0mm, 4.5mm, 5.0mm, 5.5mm, 7.0mm, 8.0mm), 1/4" drive**
8716 **Speed Bit Set, hex driver, 2-piece ball-end (2.0mm, 2.5mm), 1/4" drive**
8716X **Speed Bit Set, hex driver, 3-piece ball-end (2.0mm, 2.5mm, 3.0mm), 1/4" drive**
8715 **Speed Bit Set, hex driver, 3-piece straight (1.5mm, 2.0mm, 2.5mm), 1/4" drive**
8715X **Speed Bit Set, hex driver, 4-piece straight (1.5mm, 2.0mm, 2.5mm, 3.0mm), 1/4" drive**
3415 **Tool set with pouch (includes 1.5mm, 2.0mm, 2.5mm, 3.0mm, 3.5mm, 4mm drivers/ 4mm, 5mm, 5.5mm, 7mm and 8mm nut drivers/ 2mm, 4mm, and 5mm slotted screwdrivers/ #00 Phillips, #0 Phillips, and #1 Phillips screwdrivers/ 4mm and 8mm wrench/ driver handle**

Turnbuckles & Threaded Rods

3643X	**Camber links, front (TUBES blue-anodized, 7075-T6 aluminum, stronger than titanium) (83mm) (2)/ rod ends (4)/ aluminum wrench (1) (#2579 3x15 BCS (4) required for installation)**
3643G	**Camber links, front (TUBES green-anodized, 7075-T6 aluminum, stronger than titanium) (83mm) (2)/ rod ends (4)/ aluminum wrench (1) (#2579 3x15 BCS (4) required for installation)**
3643R	**Camber links, front (TUBES red-anodized, 7075-T6 aluminum, stronger than titanium) (83mm) (2)/ rod ends (4)/ aluminum wrench (1) (#2579 3x15 BCS (4) required for installation)**
3644X	**Camber links, rear (TUBES blue-anodized, 7075-T6 aluminum, stronger than titanium) (73mm) (2)/ rod ends (4)/ aluminum wrench (1) (#2579 3x15 BCS (4) required for installation)**
3644G	**Camber links, rear (TUBES green-anodized 7075-T6 aluminum, stronger than titanium) (73mm) (2)/ rod ends (4)/ aluminum wrench (1) (#2579 3x15 BCS (4) required for installation)**
3644R	**Camber links, rear (TUBES red-anodized, 7075-T6 aluminum, stronger than titanium) (73mm) (2)/ rod ends (4)/ aluminum wrench (1) (#2579 3x15 BCS (4) required for installation)**
5525	Rod ends (12)/ hollow balls (12)
6742	**Toe link, front & rear (molded composite) (2)/ hollow balls (4) (87mm center to center)**
6742X	**Toe links (TUBES blue-anodized, 7075-T6 aluminum, stronger than titanium) (87mm) (2)/ rod ends (4)/ aluminum wrench (1)**
6742G	**Toe links (TUBES green-anodized, 7075-T6 aluminum, stronger than titanium) (87mm) (2)/ rod ends (4)/ aluminum wrench (1)**
6742R	**Toe links (TUBES red-anodized, 7075-T6 aluminum, stronger than titanium) (87mm) (2)/ rod ends (4)/ aluminum wrench (1)**
3644	Turnbuckles, camber link, 39mm (69mm center to center) (assembled with rod ends and hollow balls) (1 left, 1 right) (fits front & rear on Slash)
3643	Turnbuckles, camber link, 49mm (82mm center to center) (assembled with rod ends and hollow balls) (1 left, 1 right)
5539	Turnbuckles, camber links, 58mm (assembled with rod ends and hollow balls) (2)

If you have questions or need technical assistance, call Traxxas at:

1-888-TRAXXAS

(1-888-872-9927) (U.S. residents only)

For orders, calls outside the U.S., and other information, call 972-549-3000, or fax to 972-549-3011 e-mail Traxxas at support@Traxxas.com

TRAXXAS.com

REV. 201019 1540

STAMPEDE 4X4 VXL BRUSHLESS

MODEL 67086-4

1/10 SCALE 4WD BRUSHLESS MONSTER TRUCK



OIL-FILLED ULTRA SHOCKS

VELINEON BRUSHLESS POWER SYSTEM

TQi 2.4GHz TRANSMITTER COMPATIBLE WITH TRAXXAS LINK WIRELESS MODULE

BRUSHLESS POWER, ALL-WEATHER, ALL-TERRAIN FUN

We take our monster trucks seriously at Traxxas, and the Stampede 4X4 VXL with Traxxas Stability Management is engineered like no other to turn extreme power into extreme monster truck fun! The efficient, low-mass drivetrain is totally optimized for the brutal torque of Velineon brushless power, and following the legacy of the Stampede name, this 4X4 is overbuilt and Traxxas Tough to withstand all the 4-wheel drive monster mayhem you can dish out. The patented adjustable wheelie bar is required equipment as Stampede 4X4 launches hard, sending the front wheels soaring for the sky. You're in full control with the new Traxxas TQi 2.4GHz radio system and the superior handling of fully independent suspension and smooth bellcrank steering. The Velineon Brushless Power System unleashes 35+mph with an optional 7-cell NiMH (sold separately). Install a 3S LiPo pack and optional high speed gearing and Stampede 4X4 shatters the speedometer with 60+mph speed! It's brushless done the Traxxas way: brutally fast and easy to use. Just plug it in and switch it on to feed your need for extreme horsepower.

*With 3S LiPo battery (sold separately) and optional gearing

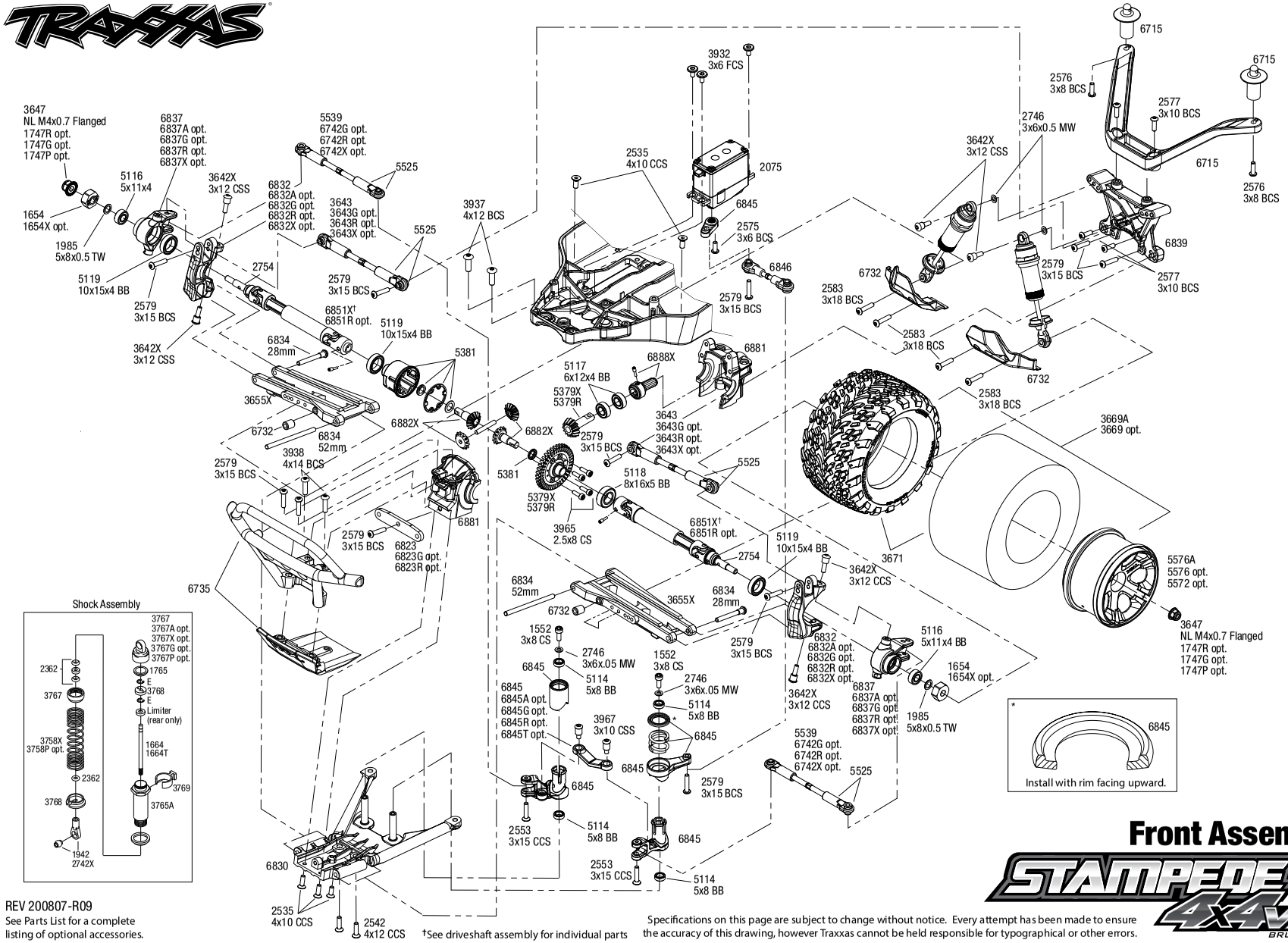

Front Assembly

REV 200807-R09

See Parts List for a complete listing of optional accessories.

†See driveshaft assembly for individual parts

Specifications on this page are subject to change without notice. Every attempt has been made to ensure the accuracy of this drawing, however Traxxas cannot be held responsible for typographical or other errors.

STAMPEDE 4X4 VXL BRUSHLESS

STAMPEDE 4X4 VXL® (67086-4)

Chassis Assembly

REV 200807-R09

See Parts List for a complete listing of optional accessories.

Specifications on this page are subject to change without notice. Every attempt has been made to ensure the accuracy of this drawing, however Traxxas cannot be held responsible for typographical or other errors.

STAMPEDE 4X4 VXL BRUSHLESS
Rear Assembly

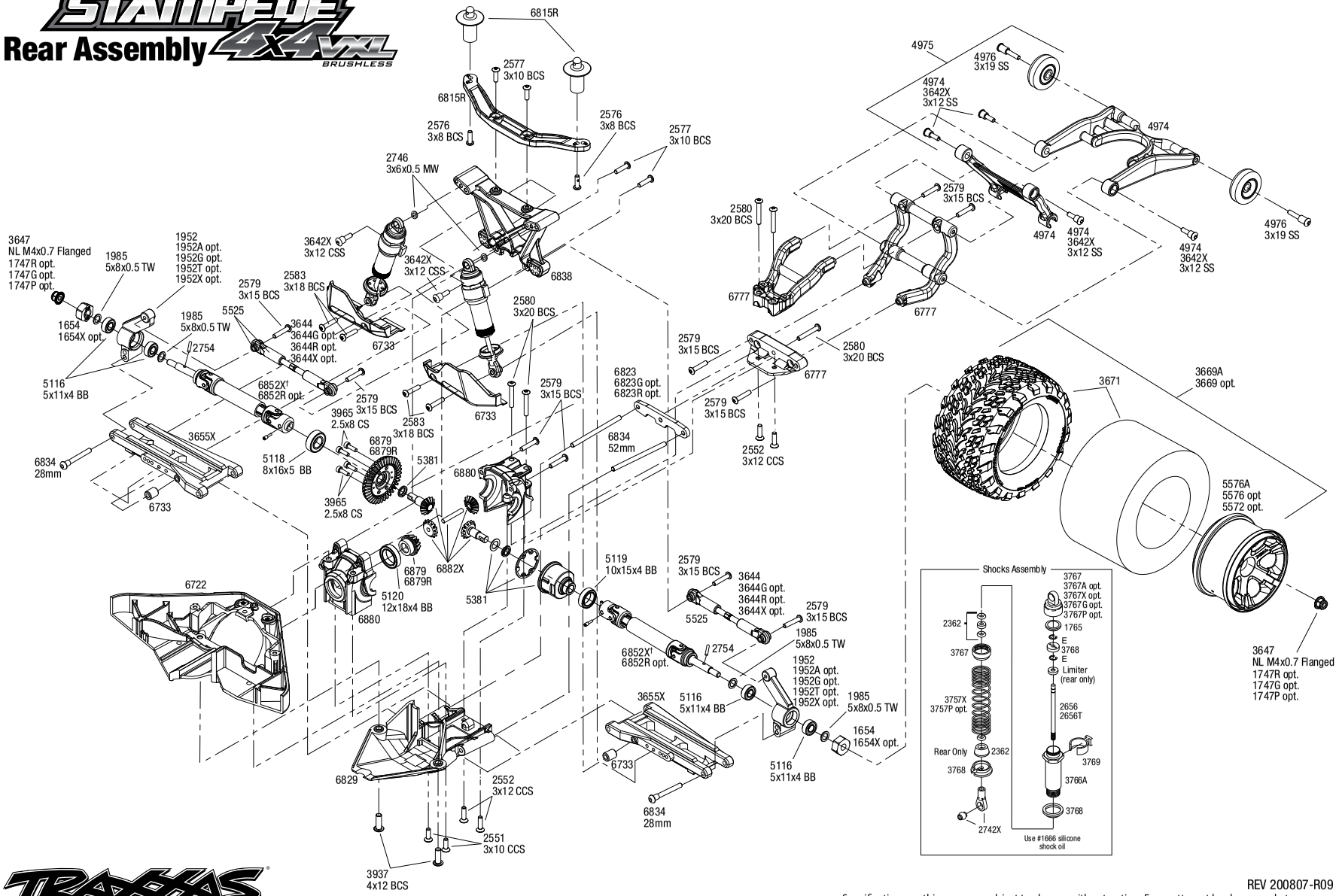

TRAXXAS

See Parts List for a complete listing of optional accessories.

REV 200807-R09

Specifications on this page are subject to change without notice. Every attempt has been made to ensure the accuracy of this drawing, however Traxxas cannot be held responsible for typographical or other errors.

STAMPEDE 4X4 VXL® (67086-4)

Center Driveline Assembly

See Parts List for a complete listing of optional accessories.

Specifications on this page are subject to change without notice. Every attempt has been made to ensure the accuracy of this drawing, however Traxxas cannot be held responsible for typographical or other errors.

REV 200807-R09

Questions? **Call toll-free, 1-888-TRAXXAS**

Driveshaft Assembly

Rear Driveshaft Assembly

Available fully assembled as part #6852X

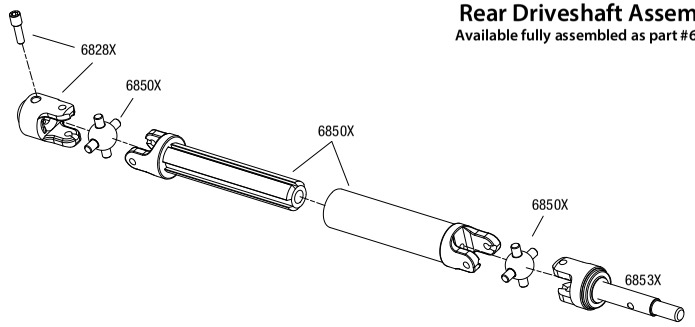

Front Driveshaft Assembly

Available fully assembled as part #6851X

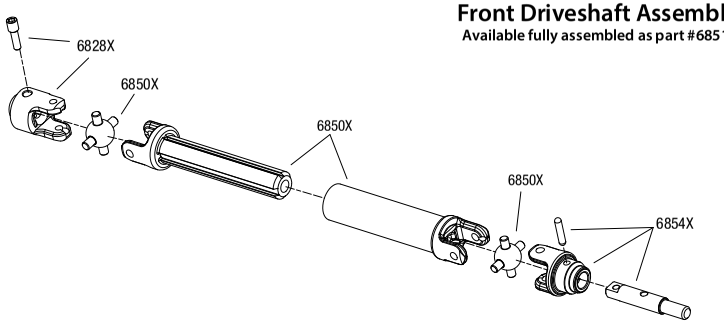

Modular Assembly

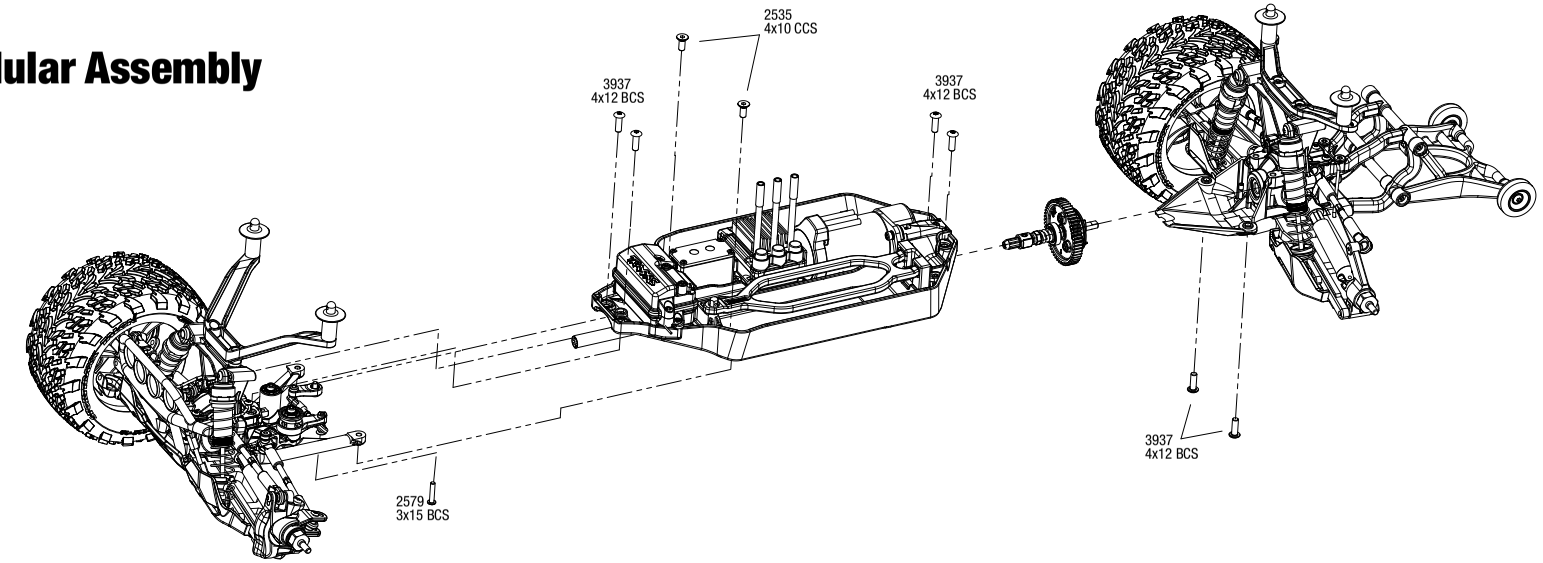

REV 200807-R09

Specifications on this page are subject to change without notice.
Every attempt has been made to ensure the accuracy of this drawing, however Traxxas cannot
be held responsible for typographical or other errors. See Parts List for a complete listing of optional accessories.

STAMPEDE 4X4 VXL® (67086-4)

PARTS SHOWN IN BOLD ARE OPTIONAL ACCESSORIES.

Part categories and individual part listings are arranged alphabetically.

Bearings & Bushings

4607	**Ball bearings (5x11x4mm) (8)**
4612	**Ball bearings (10x15x4mm) (2)**
2728	**Ball bearings (5x8x2.5mm) (2)**
5119A	Ball bearings, black rubber sealed (10x15x4mm) (2)
5119	Ball bearings, blue rubber sealed (10x15x4mm) (2)
5120	Ball bearings, blue rubber sealed (12x18x4mm) (2)
5116	Ball bearings, blue rubber sealed (5x11x4mm) (2)
5114	Ball bearings, blue rubber sealed (5x8x2.5mm) (2)
5117	Ball bearings, blue rubber sealed (6x12x4mm) (2)
5118	Ball bearings, blue rubber sealed (8x16x5mm) (2)
1985	PTFE-coated washers, 5x8x0.5mm (20) (use with ball bearings)

Body & Accessories

1926	Antenna caps, vinyl (2)/ antenna spool
1726	Antenna, tube (1)/ vinyl antenna cap (1)/ wire retainer (1)
3935	Body clip (mounting clip), angled, 90-degrees (10)
3935A	**Body clip (mounting clip), angled, 90-degrees (black) (10)**
3934	Body clips, heavy duty (12)
6715	Body mount (1)/ body mount post (2) (front)
6815R	Body mount (1)/ body mount post (2)/ body post extensions (2) (front or rear)
1815	Body washers (8)
6716	**Body washers, foam, 2mm (2)/ 3mm (2)/ 4mm (4)**
3617	**Body, Stampede® (clear, requires painting) (requires #3614 to mount)**
6711X	**Body, Stampede® 4X4 VXL, ProGraphix® (Graphics are printed, requires paint & final color application)/ decal sheet**
2514	**Decal sheet, racing sponsors**
6713	Decal Sheet, Stampede® 4X4 VXL
9950	**Official Team Traxxas® racing decal set (flag logo/ 6-color)**
5185	**Tires, rubber (2) (fits Traxxas® wheelie bar wheels)**
4974	Wheelie bar arm (1)/ connector (1)/ 3x12 SS (hex drive) (4)
6777	Wheelie bar mounts/ rear skidplate (black)
4976	Wheels (4)/ axles (2) (for T-Maxx®/E-Maxx wheelie bar)
5186A	**Wheels, aluminum (blue-anodized) (2)/ 5x8mm ball bearings (4)/ axles (2)/ rubber tires (2)**
5186	**Wheels, aluminum (red-anodized) (2)/ 5x8mm ball bearings (4)/ axles (2)/ rubber tires (2)**

Center Driveline

5119A	Ball bearings, black rubber sealed (10x15x4mm) (2)
5119	Ball bearings, blue rubber sealed (10x15x4mm) (2)
5120	Ball bearings, blue rubber sealed (12x18x4mm) (2)
5116	Ball bearings, blue rubber sealed (5x11x4mm) (2)
5117	Ball bearings, blue rubber sealed (6x12x4mm) (2)
6893G	**Bearing adapter, 6061-T6 aluminum (green-anodized) (1)/ 10x15x4mm ball bearing (black rubber sealed) (1) (for slipper shaft)**
6893X	**Bearing adapter, 6160-T6 aluminum (blue-anodized) (1)/10x15x4mm ball bearing (blue rubber sealed) (1) (for slipper shaft)**
6741	Cover, center driveshaft (clear)
6877A	**Cover, gear (clear)**
6877	Cover, gear/ motor wire hold-down clip
6814	**Differential kit, center (complete)**
6888	**Drive hub, center, rear (1)/ 4x3 GS (1)**
6888X	Drive hub, front, hardened steel (1)/ screw pin (1)
6755	Driveshaft, center, 6061-T6 aluminum (blue-anodized)
6755G	**Driveshaft, center, 6061-T6 aluminum (green-anodized)**
6755R	**Driveshaft, center, 6061-T6 aluminum (red-anodized)**
6883	**Gear set, center differential (output gears (2)/ spider gears (2)/ spider gear shaft)**
5148	Grease, white lithium
6884	**Housing, center differential/ x-ring gaskets (2)/ ring gear gasket/ bushings (2)/ 5x10x0.5 TW (2)/ CCS 2.5x8 (4)**
6893	Input shaft (slipper shaft)/ bearing adapter (1)/pin (1)
6890	Plate, motor
6890X	**Plate, motor, 6061-T6 aluminum (blue-anodized)**
5352R	**Rebuild kit (heavy duty), slipper clutch (steel disc/ aluminum friction pads (3)/ spring (1)/ 2x9.8mm pin/ 5x8mm MW/ 5.0mm NL (1)/ 4.0mm NL (1))**
5352X	**Rebuild kit, slipper clutch (steel disc/ friction pads (3)/ spring (2)/ 2x9.8mm pin/ 5x8mm MW/ 5.0mm NL (1)/ 4.0mm NL (1))**
5552X	Rebuild kit, slipper clutch (steel disc/ friction pads (3)/ spring (2)/ pin/ 4.0mm NL (1)/ 5.0mm NL (1))
2575	Screws, 3x6mm button-head machine (hex drive) (6)
2554	Screws, 3x6mm cap-head machine (hex drive) (6)
3932	Screws, 3x6mm flat-head machine (hex drive) (6)
1647	Silicone grease
6878	Slipper clutch, complete
5556	Slipper pressure plate & hub (aluminum alloy)
5351	**Slipper pressure plate and hub (alloy)**

Chassis & Attachments

6715	Body mount (1)/ body mount post (2) (front)
6815R	Body mount (1)/ body mount post (2)/ body post extensions (2) (front or rear)
3628	Box, receiver (sealed)/ foam pad/2.5x8mm CS (4)/ 3x10mm CS (2)
6735	Bumper, front/ skidplate, front (black)
6722	Chassis
6727	Hold down, battery (2)/ hold down retainer/ battery post/ angled body clip
6727X	**Hold down, battery/ hold down retainer/ battery post/ angled body clip (allows for installation of taller, multi-cell batteries)**
3629	Seal kit, receiver box (includes o-ring, seals, and silicone grease)
5185	**Tires, rubber (2) (fits Traxxas® wheelie bar wheels)**
4974	Wheelie bar arm (1)/ connector (1)/ 3x12 SS (hex drive) (4)
6777	Wheelie bar mounts/ rear skidplate (black)
4976	Wheels (4)/ axles (2) (for T-Maxx®/E-Maxx wheelie bar)
5186A	**Wheels, aluminum (blue-anodized) (2)/ 5x8mm ball bearings (4)/ axles (2)/ rubber tires (2)**
5186	**Wheels, aluminum (red-anodized) (2)/ 5x8mm ball bearings (4)/ axles (2)/ rubber tires (2)**

Differential Components

5119	Ball bearings, blue rubber sealed (10x15x4mm) (2)
5117	Ball bearings, blue rubber sealed (6x12x4mm) (2)
5118	Ball bearings, blue rubber sealed (8x16x5mm) (2)
5381	Carrier, differential/ x-ring gaskets (2)/ ring gear gasket/ 6x10x0.5 TW
6780	**Differential kit, center (complete)**
6814	**Differential kit, center (complete)**
5136X	**Differential oil kit (1 each: 10K, 30K, 50K weights)**
6783	**Gear set, center differential (output gears (2)/ spider gears (4)/ spider gear shaft (2))**
6882X	Gear set, differential (output gears (2)/ spider gears (2)/ spider gear shaft, carrier support)
6781	**Housing, center differential (aluminum)/ x-ring gaskets (2)/ ring gear gasket/ bushings (2)/ 5x10x0.5mm PTFE-coated washers (2)/ 2.5x8 CCS (4)**
6881	Housings, differential, front
6880	Housings, differential, rear
6782	**Output gears, center differential, hardened steel (2)**
5379X	Ring gear, differential/ pinion gear, differential
5379R	**Ring gear, differential/ pinion gear, differential (machined, spiral cut) (front)**
6879R	**Ring gear, differential/ pinion gear, differential (machined, spiral cut) (rear)**
6879	Ring gear, differential/ pinion gear, differential (rear)
3965	Screws, 2.5x8mm cap-head machine (6)
1647	Silicone grease

Driveline Components

5119A	Ball bearings, black rubber sealed (10x15x4mm) (2)
5119	Ball bearings, blue rubber sealed (10x15x4mm) (2)
5116	Ball bearings, blue rubber sealed (5x11x4mm) (2)
9059X	**Cross pin (2)/ drive pin (2) (repairs 2 axle shafts)**
9057X	**Differential output shafts, steel-splined constant-velocity (2)**
6828A	**Differential output yoke assembly, extreme heavy duty (2) (left or right, front or rear) (assembled with external-splined half shaft)**
6828X	Differential output yokes, heavy duty (2)/ screw pin (2)
6851X	Driveshaft assembly, front, heavy duty (1) (left or right) (fully assembled, ready to install)/ screw pin (1)
6852X	Driveshaft assembly, rear, heavy duty (1) (left or right) (fully assembled, ready to install)/ screw pin (1)
6851R	**Driveshafts, front, steel-spline constant-velocity (complete assembly) (2)**
9051X	**Driveshafts, front, steel-spline constant-velocity (complete assembly) (2)**
6852R	**Driveshafts, rear, steel-spline constant-velocity (complete assembly) (2)**
9052X	**Driveshafts, rear, steel-spline constant-velocity (complete assembly) (2)**
9055X	**Half shaft, external splined (steel-spline constant velocity) (1)**
6750	**Half shaft, external splined (steel-spline constant-velocity) (1)**
9056X	**Half shaft, internal splined (steel-spline constant velocity) (1)**

6751 **Half shaft, internal splined (steel-spline constant-velocity) (1)**
6850X Half shafts, heavy duty (external splined (2)/ internal splined (2))/ metal u-joints (4)
6757 **Rebuild kit, steel-splined constant-velocity driveshafts (includes pins, dustboots, lube, and hardware)**
9058X **Rebuild kit, steel-splined constant-velocity driveshafts (includes pins, lube, and hardware for two axle shafts)**
6854A **Stub axle assembly, front, outer, extreme heavy duty (1) (left or right) (assembled with internal-splined half shaft)**
6853A **Stub axle assembly, rear, outer, extreme heavy duty (1) (left or right) (assembled with internal-splined half shaft)**
6754 **Stub axle, front, 5mm (steel-splined constant-velocity driveshaft) (1)**
9054X **Stub axle, front, steel-splined constant velocity (1)**
6753 **Stub axle, rear, 5mm (steel-splined constant-velocity driveshaft) (1)**
9053X **Stub axle, rear, steel-splined constant velocity (1)**
6854X Stub axles, front, heavy duty (2)/ yokes (2)/ pins (4)
6853X Stub axles, rear, heavy duty (2)/pins (2)

Front Suspension & Steering

5114 Ball bearings, blue rubber sealed (5x8x2.5mm) (2)
6823 Bulkhead tie bars, front & rear, aluminum (blue-anodized)
6823G **Bulkhead tie bars, front & rear, aluminum (green-anodized)**
6823R **Bulkhead tie bars, front & rear, aluminum (red-anodized)**
6830X Bulkhead, front
3643X **Camber links, front (TUBES blue-anodized, 7075-T6 aluminum, stronger than titanium) (83mm) (2)/ rod ends (4)/ aluminum wrench (1) (#2579 3x15 BCS (4) required for installation)**
3643G **Camber links, front (TUBES green-anodized, 7075-T6 aluminum, stronger than titanium) (83mm) (2)/ rod ends (4)/ aluminum wrench (1) (#2579 3x15 BCS (4) required for installation)**
3643R **Camber links, front (TUBES red-anodized, 7075-T6 aluminum, stronger than titanium) (83mm) (2)/ rod ends (4)/ aluminum wrench (1) (#2579 3x15 BCS (4) required for installation)**
6832X **Caster blocks (c-hubs), 6061-T6 aluminum (blue-anodized), left & right**
6832G **Caster blocks (c-hubs), 6061-T6 aluminum (green-anodized), left & right**
6832A **Caster blocks (c-hubs), 6061-T6 aluminum (orange-anodized), left & right**
6832R **Caster blocks (c-hubs), 6061-T6 aluminum (red-anodized), left & right**
6832 Caster blocks (c-hubs), left & right
6845A **Drag link, machined 6061-T6 aluminum (blue-anodized)**
6845G **Drag link, machined 6061-T6 aluminum (green-anodized)**
6845T **Drag link, machined 6061-T6 aluminum (orange-anodized)**
6845R **Drag link, machined 6061-T6 aluminum (red-anodized)**
6895 **Linkage, front sway bar (2) (assembled with rod ends, hollow balls and ball studs)**
6897 **Linkage, rear sway bar (2) (assembled with rod ends, hollow balls and ball studs)**
6846 Linkage, steering (3x20mm turnbuckle) (1)/ rod ends (2)/ hollow balls (2)
3646 Screws, 3x15mm flat-head machine (hex drive) (6)
6839 Shock tower, front
6839X **Shock tower, front, 7075-T6 aluminum (blue-anodized)**
6845X Steering bellcranks/ servo saver/ servo saver spring/ servo spring retainer/servo horn, steering
6837X **Steering blocks, 6061-T6 aluminum (blue-anodized), left & right**
6837G **Steering blocks, 6061-T6 aluminum (green-anodized), left & right**
6837A **Steering blocks, 6061-T6 aluminum (orange-anodized), left & right**
6837R **Steering blocks, 6061-T6 aluminum (red-anodized), left & right**
6837 Steering blocks, left & right
6854A **Stub axle assembly, front, outer, extreme heavy duty (1) (left or right) (assembled with internal-splined half shaft)**
6854X Stub axles, front, heavy duty (2)/ yokes (2)/ pins (4)
6732 Suspension arm guards, front (2)/ guard spacers (2)/ hollow balls (2)/ 3X16mm BCS (8)
3655P **Suspension arms, blue, front/rear (left & right), heavy duty (2)**
3655R **Suspension arms, front/rear (left & right), heavy duty (2)**
3655G **Suspension arms, green, front/rear (left & right), heavy duty (2)**
3655X Suspension arms, left & right
3655T **Suspension arms, orange, front/rear (left & right), heavy duty (2)**
3655L **Suspension arms, red, front/rear (left & right), heavy duty (2)**
3655A **Suspension arms, white, front/rear (left & right), heavy duty (2)**
6834 Suspension pin set, complete (front and rear)
6898 **Sway bar kit (front and rear) (includes front and rear sway bars and adjustable linkage)**
6742X **Toe links (TUBES blue-anodized, 7075-T6 aluminum, stronger than titanium) (87mm) (2)/ rod ends (4)/ aluminum wrench (1)**
6742G **Toe links (TUBES green-anodized, 7075-T6 aluminum, stronger than titanium) (87mm) (2)/ rod ends (4)/ aluminum wrench (1)**
6742R **Toe links (TUBES red-anodized, 7075-T6 aluminum, stronger than titanium) (87mm) (2)/ rod ends (4)/ aluminum wrench (1)**
3643 Turnbuckles, camber link, 49mm (82mm center to center) (assembled with rod ends and hollow balls) (1 left, 1 right)
5539 Turnbuckles, camber links, 58mm (assembled with rod ends and hollow balls) (2)
6896 **Wires, sway bar (front & rear, hard & soft) / 3x6 FCS (4)**

Hardware

1926 Antenna caps, vinyl (2)/ antenna spool
1726 Antenna, tube (1)/ vinyl antenna cap (1)/ wire retainer (1)
3642 Attachment screws, shock (3x12mm shoulder screws) (6)
1552 Screws, 3x8mm cap-head machine (hex drive) (6)/washers (6)/ wrench
3935 Body clip (mounting clip), angled, 90-degrees (10)
3935A **Body clip (mounting clip), angled, 90-degrees (black) (10)**
3934 Body clips, heavy duty (12)
1589 Double-sided adhesive tape (25mm x 25mm) (2)
2586 Screws, 3x15mm cap-head machine (hex drive) (6)
2745 Nuts, 3mm nylon locking (12)
3647 Nuts, 4mm flanged nylon locking (steel, serrated) (8)
1747 **Nuts, 4mm nylon locking (10)**
1747R **Nuts, aluminum, flanged, serrated (4mm) (blue-anodized) (4)**
1747G **Nuts, aluminum, flanged, serrated (4mm) (green-anodized) (4)**
1747P **Nuts, aluminum, flanged, serrated (4mm) (pink-anodized) (4)**
1747A **Nuts, aluminum, flanged, serrated (4mm) (red-anodized) (4)**
1985 PTFE-coated washers, 5x8x0.5mm (20) (use with ball bearings)
5525 Rod ends (12)/ hollow balls (12)
2742X Rod ends, short (6)/ hollow balls (6)
3347 Screws, 2.5x5mm button-head machine (hex drive) (6)
3215 Screws, 2.5x6mm cap-head machine (hex drive) (6)
3965 Screws, 2.5x8mm cap-head machine (6)
2577 Screws, 3x10mm button-head machine (hex drive) (6)
2578 Screws, 3x12mm button-head machine (hex drive) (6)
2552 Screws, 3x12mm countersunk machine (6) (hex drive)
2579 Screws, 3x15mm button-head machine (hex drive) (6)
3646 Screws, 3x15mm flat-head machine (hex drive) (6)
2583 Screws, 3x18mm button-head machine (hex drive) (6)
2580 Screws, 3x20mm button-head machine (hex drive) (6)
2591 Screws, 3x23mm button-head machine (hex drive) (6)
2582 Screws, 3x30mm button-head machine (hex drive) (6)
2592 Screws, 3x40mm button-head machine (hex drive) (6)
2575 Screws, 3x6mm button-head machine (hex drive) (6)
2554 Screws, 3x6mm cap-head machine (hex drive) (6)
2534 Screws, 3x6mm countersunk machine (6) (hex drive)
3932 Screws, 3x6mm flat-head machine (hex drive) (6)
2576 Screws, 3x8mm button-head machine (hex drive) (6)
3931 Screws, 3x8mm flat-head machine (hex drive) (6)
3937 Screws, 4x12mm button-head machine (hex drive) (6)
2542 Screws, 4x12mm countersunk machine (hex drive) (6)
2546 Screws, 4x15mm countersunk machine (hex drive) (6)
2743 Set (grub) screws, 3mm hardened (12)
3642X Shoulder screws, Ultra Shocks (3x12 hex drive) (6)
2754 Stub axle pins (4)
2746 Washers, 3x6mm metal (12)

LED Lights

6784 **LED light bar (chrome, 4 clear lights)**

Manuals

6799 Owner's Manual, Stampede® 4X4 VXL

Motors & Electronics

1726 Antenna, tube (1)/ vinyl antenna cap (1)/ wire retainer (1)
2260 **BEC assembly (complete)**
3340 **Cooling fan, Velineon® VXL-3s ESC**
2072A Gear set (for 2070, 2075 servos)
2252 **Gear set, metal (for 2250, 2255 servos)**
3354R Motor cover, endbell (Velineon® 3500)
6860A Motor mount (assembled with 3x6 flat-head machine screw)/ 3.0mm NL (1)
6860R **Motor mount, 6061-T6 aluminum (blue-anodized)**
3351R Motor, Velineon® 3500, brushless (assembled with 12-gauge wire and gold-plated bullet connectors)
3352R Rebuild kit, Velineon® 3500 (includes plastic endbell, 5x11x4mm ball bearings (2), 2.5x5mm BCS (with threadlock) (4), rear bushing)
3347 Screws, 2.5x5mm button-head machine (hex drive) (6)
3932 Screws, 3x6mm flat-head machine (hex drive) (6)
2254 **Servo case, aluminum (blue-anodized) (middle) (for 2250 servo)**
2253 **Servo case, aluminum (red-anodized) (middle) (for 2255 servo)**

STAMPEDE 4X4 VXL® (67086-4)

2251 **Servo case, plastic (top, middle, bottom)/ gaskets/ hardware (for 2250, 2255 servos)**
2074 Servo case/gaskets (for 2056 and 2075 waterproof servos)
2075R **Servo, digital high-speed, metal gear (ball bearing), waterproof**
2075 Servo, digital high-torque (ball bearing), waterproof
2250 **Servo, digital high-torque 330 coreless, metal gear (ball bearing), waterproof**
2255 **Servo, digital high-torque 400 brushless, metal gear (ball bearing), waterproof**
2075X **Servo, digital high-torque, metal gear (ball bearing), waterproof**
3350R Velineon® VXL-3s Brushless Power System, waterproof (includes VXL-3s waterproof ESC, Velineon 3500 motor, and speed control mounting plate (part #3725R))
3355R Velineon® VXL-3s Electronic Speed Control, waterproof (brushless) (fwd/rev/brake)

Radio System, Batteries & Chargers

2849X **4000mAh 11.1v 3-Cell 25C LiPo Battery**
2842X **5000mAh 7.4v 2-Cell 25C LiPo Battery**
2843X **5800mAh 7.4v 2-Cell 25C LiPo Battery**
2857X **6400mAh 11.1v 3-Cell 25C LiPo Battery**
2976 **AC to DC converter, 40W**
2938X **Adapter, Traxxas® iD® LiPo battery (adapts Traxxas iD batteries to separate balance ports)**
2943 **Battery charge indicators (green (4), blue (4), grey (4))**
6548 Battery door, transmitter (replacement for #6516, 6517, 6528, 6529, 6530 transmitters)
2914 **Battery, Power Cell AA Alkaline (4)**
2926X **Battery, Power Cell, 3000mAh (NiMH, 7-C hump, 8.4V)**
2941X **Battery, Series 3 Power Cell, 3300mAh (NiMH, 7-C hump, 8.4V)**
2951X **Battery, Series 4 Power Cell, 4200mAh (NiMH, 7-C hump, 8.4V)**
2961X **Battery, Series 5 Power Cell, 5000mAh (NiMH, 7-C hump, 8.4V)**
2984 **Battery/charger completer pack (includes #2969 2-amp NiMH peak detecting AC charger (1), #2926X 3000mAh 8.4V 7-cell NiMH battery (1))**
2992 **Battery/charger completer pack (includes #2970 iD® charger (1), #2843X 5800mAh 7.4V 2-cell 25C LiPo battery (1))**
2994 **Battery/charger completer pack (includes #2970 iD® charger (1), #2849X 4000mAh 11.1v 3-Cell 25C LiPo Battery (1))**
2260 **BEC assembly (complete)**
2975 **Charger, DC, 4 amp (6 - 7 cell, 7.2 - 8.4 volt, NiMH)**
2972 **Charger, EZ-Peak® Dual, 100W, NiMH/LiPo with iD® Auto Battery Identification**
2973 **Charger, EZ-Peak® Live Dual, 200W, NiMH/LiPo with iD® Auto Battery Identification**
2971 **Charger, EZ-Peak® Live, 100W, NiMH/LiPo with iD® Auto Battery Identification**
2970 **Charger, EZ-Peak® Plus, 4 amp, NiMH/LiPo with iD® Auto Battery Identification**
6525 **Communication link, telemetry expander**
6541 **Connector, power tap (with cable) (long)/ wire tie**
6512 Cover plate, Traxxas Link™ Wireless Module
2978 **Fuse, charger, 5A (2) (for #2974, 2975, 2977)**
2072A Gear set (for 2070, 2075 servos)
2252 **Gear set, metal (for 2250, 2255 servos)**
2968X **LiPo cell voltage checker/balancer (includes #2938X adapter for Traxxas® iD® batteries)**
2968 **LiPo cell voltage checker/balancer (requires #2938X adapter for Traxxas® iD® batteries)**
6555 **Mount, telemetry expander (fits Slash 4X4, Stampede® 4X4, Rally, Jato®)**
6535 **Mount, temperature sensor (electric motors)/ wire tie/ thermal pad**
6533 Receiver, micro, TQi 2.4GHz with telemetry & TSM (5-channel)
3932 Screws, 3x6mm flat-head machine (hex drive) (6)
6552 **Seal kit, expander box (includes o-ring, seals, and silicone grease)**
6526 **Sensor, auto-detectable, temperature**
6527 **Sensor, auto-detectable, voltage**
6520 **Sensor, RPM (long)/ 3x4mm BCS (2)/ 3x4 GS (1)**
6521 **Sensor, temperature and voltage (long)**
2254 **Servo case, aluminum (blue-anodized) (middle) (for 2250 servo)**
2253 **Servo case, aluminum (red-anodized) (middle) (for 2255 servo)**
2251 **Servo case, plastic (top, middle, bottom)/ gaskets/ hardware (for 2250, 2255 servos)**
2074 Servo case/gaskets (for 2056 and 2075 waterproof servos)
2075R **Servo, digital high-speed, metal gear (ball bearing), waterproof**
2075 Servo, digital high-torque (ball bearing), waterproof
2250 **Servo, digital high-torque 330 coreless, metal gear (ball bearing), waterproof**
2255 **Servo, digital high-torque 400 brushless, metal gear (ball bearing), waterproof**
2075X **Servo, digital high-torque, metal gear (ball bearing), waterproof**
6553X **Telemetry expander 2.0 and GPS module 2.0, TQi radio system**
6550X **Telemetry expander 2.0, TQi radio system (for use only with #6551X GPS module)**
6551X **Telemetry GPS module 2.0, TQi radio system (for use only with #6550X telemetry expander)**
6539 **Telemetry trigger magnet holder, center differential/ magnet, 5x2mm (1)/ 3x8mm BCS (3)**
6538 **Telemetry trigger magnet holders, spur gear/ magnet, 5x2mm (1)/ 3x8mm CCS (3)/ 3x10mm CCS (3)**
6540 **Telemetry trigger magnet, 5X2mm (1)**
6509R TQi 2.4 GHz High Output radio system, 2-channel, Traxxas Link™ enabled, TSM (2-ch transmitter, 5-ch micro receiver)
6507R **TQi 2.4 GHz High Output radio system, 4-channel with Traxxas Link™ Wireless Module, TSM (4-ch transmitter, 5-ch micro receiver)**
6528 Transmitter, TQi Traxxas Link™ enabled, 2.4GHz high output, 2-channel (transmitter only)
6529 **Transmitter, TQi Traxxas Link™ enabled, 2.4GHz high output, 3-channel (transmitter only)**
6530 **Transmitter, TQi Traxxas Link™ enabled, 2.4GHz high output, 4-channel (transmitter only)**
6511 **Traxxas Link™ Wireless Module**

Ready-To-Race Model

67086-4 Stampede® 4X4 VXL: 1/10 Scale Monster Truck with TQi Traxxas Link™ Enabled 2.4GHz Radio System & Traxxas Stability Management (TSM)®

Rear Suspension

6823 Bulkhead tie bars, front & rear, aluminum (blue-anodized)
6823G **Bulkhead tie bars, front & rear, aluminum (green-anodized)**
6823R **Bulkhead tie bars, front & rear, aluminum (red-anodized)**
6829 Bulkhead, rear
3644X **Camber links, rear (TUBES blue-anodized, 7075-T6 aluminum, stronger than titanium) (73mm) (2)/ rod ends (4)/ aluminum wrench (1) (#2579 3x15 BCS (4) required for installation)**
3644G **Camber links, rear (TUBES green-anodized 7075-T6 aluminum, stronger than titanium) (73mm) (2)/ rod ends (4)/ aluminum wrench (1) (#2579 3x15 BCS (4) required for installation)**
3644R **Camber links, rear (TUBES red-anodized, 7075-T6 aluminum, stronger than titanium) (73mm) (2)/ rod ends (4)/ aluminum wrench (1) (#2579 3x15 BCS (4) required for installation)**
1952X **Carriers, stub axle (blue-anodized 6061-T6 aluminum) (rear) (2)**
1952G **Carriers, stub axle (green-anodized 6061-T6 aluminum) (rear) (2)**
1952T **Carriers, stub axle (orange-anodized 6061-T6 aluminum) (rear) (2)**
1952 Carriers, stub axle (rear) (2)
1952A **Carriers, stub axle (red-anodized 6061-T6 aluminum) (rear) (2)**
6895 **Linkage, front sway bar (2) (assembled with rod ends, hollow balls and ball studs)**
6897 **Linkage, rear sway bar (2) (assembled with rod ends, hollow balls and ball studs)**
6838 Shock tower, rear
6838X **Shock tower, rear, 7075-T6 aluminum (blue-anodized)**
6853A **Stub axle assembly, rear, outer, extreme heavy duty (1) (left or right) (assembled with internal-splined half shaft)**
6853X Stub axles, rear, heavy duty (2)/pins (2)
6733 Suspension arm guards, rear (2)/ guard spacers (2)/ hollow balls (2)/ 3X16mm BCS (8)
3655P **Suspension arms, blue, front/rear (left & right), heavy duty (2)**
3655R **Suspension arms, front/rear (left & right), heavy duty (2)**
3655G **Suspension arms, green, front/rear (left & right), heavy duty (2)**
3655X Suspension arms, left & right
3655T **Suspension arms, orange, front/rear (left & right), heavy duty (2)**
3655L **Suspension arms, red, front/rear (left & right), heavy duty (2)**
3655A **Suspension arms, white, front/rear (left & right), heavy duty (2)**
6834 Suspension pin set, complete (front and rear)
6898 **Sway bar kit (front and rear) (includes front and rear sway bars and adjustable linkage)**
3644 Turnbuckles, camber link, 39mm (69mm center to center) (assembled with rod ends and hollow balls) (1 left, 1 right) (fits front & rear on Slash, rear on Slash 4X4)
6896 **Wires, sway bar (front & rear, hard & soft) / 3x6 FCS (4)**

Shocks (GTR)

7466X **Body, GTR long (hard-anodized, PTFE-coated aluminum) (1)**
7466 **Body, GTR long shock, aluminum (blue-anodized) (PTFE-coated bodies) (1)**
7466G **Body, GTR long shock, aluminum (green-anodized) (PTFE-coated bodies) (1)**
7466A **Body, GTR long shock, aluminum (orange-anodized) (PTFE-coated bodies) (1)**
7467X **Body, GTR xx-long (hard-anodized, PTFE-coated aluminum) (1)**

7467 Body, GTR xx-long shock, aluminum (blue-anodized) (PTFE-coated bodies) (1)
7467G Body, GTR xx-long shock, aluminum (green-anodized) (PTFE-coated bodies) (1)
7467A Body, GTR xx-long shock, aluminum (orange-anodized) (PTFE-coated bodies) (1)
7468X Caps & spring retainers, GTR shock (upper cap (2)/ hollow balls (4)/ bottom cap (2)/ upper retainer (2)/ lower retainer (2))
7468 Caps and spring retainers, GTR long/xx-long shock (upper cap (2)/ hollow balls (4)/ bottom cap (2)/ upper retainer (2)/ lower retainer (2))
5475 Multi-tool (plastic)
5158 Nuts, 2.5mm nylon locking (12)
7463 Rebuild kit, GTR long/xx-long shocks (x-rings, bladders, pistons, piston nuts, shock rod ends, hollow balls) (renews 2 shocks)
5469 Rod ends (GTR shocks) (6)
7464T Shaft, GTR long, TiN-coated (2)
7461 Shocks, GTR long blue-anodized, PTFE-coated bodies with TiN shafts (fully assembled, without springs) (2)
7461G Shocks, GTR long green-anodized, PTFE-coated bodies with TiN shafts (fully assembled, without springs) (2)
7461X Shocks, GTR long hard-anodized, PTFE-coated bodies with TiN shafts (assembled) (2) (without springs)
7462 Shocks, GTR xx-long blue-anodized, PTFE-coated bodies with TiN shafts (fully assembled, without springs) (2)
7462G Shocks, GTR xx-long green-anodized, PTFE-coated bodies with TiN shafts (fully assembled, without springs) (2)
7462X Shocks, GTR xx-long hard-anodized, PTFE-coated bodies with TiN shafts (assembled) (2) (without springs)
8459 Spring retainers, lower (captured) (4)/ 2.5x10 CS (4)
7440 Spring, shock, white (GTR long) (0.623 rate orange) (1 pair)
7441 Spring, shock, white (GTR long) (0.653 rate green) (1 pair)
7444 Spring, shock, white (GTR long) (0.767 rate black) (1 pair)
7445 Spring, shock, white (GTR long) (0.810 rate pink) (1 pair)
7448 Spring, shock, white (GTR long) (0.892 rate blue) (1 pair)
7442 Spring, shock, white (GTR xx-long) (0.711 rate orange) (1 pair)
7443 Spring, shock, white (GTR xx-long) (0.762 rate green) (1 pair)
7446 Spring, shock, white (GTR xx-long) (0.874 rate black) (1 pair)
7447 Spring, shock, white (GTR xx-long) (0.884 rate pink) (1 pair)
7449 Spring, shock, white (GTR xx-long) (1.004 rate blue) (1 pair)

Shocks (Pro-level Aluminum)

2664 Big Bore shock cylinder (long) (1)
2666 Big Bore shock cylinder (XX-long) (1)
5862 Big Bore shocks (hard-anodized & PTFE-coated T6 aluminum) (assembled with TiN shafts and springs) (front & rear) (4)
2660 Big Bore shocks (long) (hard-anodized & PTFE-coated T6 aluminum) (assembled with TiN shafts) w/o springs (front) (2)
2662 Big Bore shocks (XX-long) (hard-anodized & PTFE-coated T6 aluminum) (assembled with TiN shafts) w/o springs (rear) (2)
2669 Piston head set (2-hole (2)/ 3-hole (2))/ shock mounting bushings & washers (2) (Big Bore Shocks)
2362 Rebuild kit, Ultra shocks (for 2 shocks)
1942 Rod ends (16 long & 4 short)/ hollow ball connectors (18)/ ball screws (2)
2742X Rod ends, short (6)/ hollow balls (6)
2667 Shock caps, aluminum (Big Bore Shocks) (2)
1664T Shock shafts, hardened steel, titanium nitride coated (long) (2)
2656T Shock shafts, hardened steel, titanium nitride coated (xx-long) (2)
1664 Shock shafts, steel, chrome finish (long) (2)
2656 Shock shafts, steel, chrome finish (xx-long) (2)
1765 Silicone diaphragms (4)
1666 Silicone shock oil (30 wt)
2668 Spring retainers, upper & lower (2)/ spring pre-load spacers: 1mm (4)/ 1.5mm (2)/ 2mm (2)/ 4mm (2)/ 8mm (2) (Big Bore Shocks)
6863 Springs, front (progressive, +10% rate, pink) (2)
6864 Springs, front (progressive, +20% rate, blue) (2)
6862 Springs, front (progressive, -10% rate, green) (2)
6861 Springs, front (progressive, -20% rate, orange) (2)
6857 Springs, front (white) (progressive rate) (2)
5860 Springs, front (white) (progressive rate) (2) (fits #5862 aluminum Big Bore shocks)
6867 Springs, rear (progressive, +10% rate, pink) (2)
6868 Springs, rear (progressive, +20% rate, blue) (2)
6866 Springs, rear (progressive, -10% rate, green) (2)
6865 Springs, rear (progressive, -20% rate, orange) (2)
6858 Springs, rear (white) (progressive rate) (2)
5859 Springs, rear (white) (progressive rate) (2) (fits #5862 aluminum Big Bore shocks)

Shocks (Ultra Shocks)

3642 Attachment screws, shock (3x12mm shoulder screws) (6)
3765A Body, Ultra Shock(s) (long) (grey) (2)
3766A Body, Ultra Shock(s) (XXL) (grey) (2)
2362 Rebuild kit, Ultra shocks (for 2 shocks)
1942 Rod ends (16 long & 4 short)/ hollow ball connectors (18)/ ball screws (2)
2742X Rod ends, short (6)/ hollow balls (6)
3767 Shock caps (2)/ shock bottoms (2)
3767A Shock caps, aluminum (blue-anodized) (4) (fits all Ultra Shocks)
3767G Shock caps, aluminum (green-anodized) (4) (fits all Ultra Shocks)
3767P Shock caps, aluminum (pink-anodized) (4) (fits all Ultra Shocks)
3767X Shock caps, aluminum (red-anodized) (4) (fits all Ultra Shocks)
1664T Shock shafts, hardened steel, titanium nitride coated (long) (2)
2656T Shock shafts, hardened steel, titanium nitride coated (xx-long) (2)
1664 Shock shafts, steel, chrome finish (long) (2)
2656 Shock shafts, steel, chrome finish (xx-long) (2)
1765 Silicone diaphragms (4)
1666 Silicone shock oil (30 wt)
3769 Spring pre-load spacers: 1mm (4)/ 2mm (2)/ 4mm (2)/ 8mm (2)
3768 Spring retainers, upper & lower (2)/ piston head set (2-hole (2)/ 3-hole (2))
3758 Springs, front (black) (2)
3758T Springs, front (blue) (2)
3758A Springs, front (green) (2)
3758P Springs, front (pink) (2)
6863 Springs, front (progressive, +10% rate, pink) (2)
6864 Springs, front (progressive, +20% rate, blue) (2)
6862 Springs, front (progressive, -10% rate, green) (2)
6861 Springs, front (progressive, -20% rate, orange) (2)
3758X Springs, front (white) (2)
6857 Springs, front (white) (progressive rate) (2)
3757 Springs, rear (black) (2)
3757T Springs, rear (blue) (2)
3757A Springs, rear (green) (2)
3757P Springs, rear (pink) (2)
6867 Springs, rear (progressive, +10% rate, pink) (2)
6868 Springs, rear (progressive, +20% rate, blue) (2)
6866 Springs, rear (progressive, -10% rate, green) (2)
6865 Springs, rear (progressive, -20% rate, orange) (2)
3757X Springs, rear (white) (2)
6858 Springs, rear (white) (progressive rate) (2)
4957 Springs, red (for Ultra Shocks only) (2.5 rate) (f/r) (2)
3760 Ultra Shocks (black) (long) (complete w/ spring pre-load spacers & springs) (front) (2)
3762 Ultra Shocks (black) (xx-long) (complete w/ spring pre-load spacers & springs) (rear) (2)
3760A Ultra Shocks (grey) (long) (complete w/ spring pre-load spacers & springs) (2)
3762A Ultra Shocks (grey) (xx-long) (complete w/ spring pre-load spacers & springs) (rear) (2)

Slipper Clutch Components

5119A Ball bearings, black rubber sealed (10x15x4mm) (2)
6893G Bearing adapter, 6061-T6 aluminum (green-anodized) (1)/ 10x15x4mm ball bearing (black rubber sealed) (1) (for slipper shaft)
6893X Bearing adapter, 6160-T6 aluminum (blue-anodized) (1)/10x15x4mm ball bearing (blue rubber sealed) (1) (for slipper shaft)
6814 Differential kit, center (complete)
6888 Drive hub, center, rear (1)/ 4x3 GS (1)
6888X Drive hub, front, hardened steel (1)/ screw pin (1)
6883 Gear set, center differential (output gears (2)/ spider gears (2)/ spider gear shaft)
6884 Housing, center differential/ x-ring gaskets (2)/ ring gear gasket/ bushings (2)/ 5x10x0.5 TW (2)/ CCS 2.5x8 (4)
6893 Input shaft (slipper shaft)/ bearing adapter (1)/pin (1)
5352R Rebuild kit (heavy duty), slipper clutch (steel disc/ aluminum friction pads (3)/ spring (1)/ 2x9.8mm pin/ 5x8mm MW/ 5.0mm NL (1)/ 4.0mm NL (1))
5352X Rebuild kit, slipper clutch (steel disc/ friction pads (3)/ spring (2)/ 2x9.8mm pin/ 5x8mm MW/ 5.0mm NL (1)/ 4.0mm NL (1))
5552X Rebuild kit, slipper clutch (steel disc/ friction pads (3)/ spring (2)/ pin/ 4.0mm NL (1)/ 5.0mm NL (1))
2554 Screws, 3x6mm cap-head machine (hex drive) (6)
6878 Slipper clutch, complete
5556 Slipper pressure plate & hub (aluminum alloy)
5351 Slipper pressure plate and hub (alloy)

STAMPEDE 4X4 VXL® (67086-4)

Spur Gears & Pinion Gears

6747 Gear, 11-T pinion (32-p) (steel)/ set screw
3942X Gear, 12-T pinion (32-p), heavy duty (machined, hardened steel)/ set screw
3943X Gear, 13-T pinion (32-p), heavy duty (machined, hardened steel)/ set screw
3944X Gear, 14-T pinion (32-p), heavy duty (machined, hardened steel)/ set screw
3945X Gear, 15-T pinion (32-p), heavy duty (machined, hardened steel)/ set screw
3946X Gear, 16-T pinion (32-p), heavy duty (machined, hardened steel)/ set screw
3947X Gear, 17-T pinion (32-p), heavy duty (machined, hardened steel)/ set screw
3948X Gear, 18-T pinion (32-p), heavy duty (machined, hardened steel)/ set screw
3949X Gear, 19-T pinion (32-p), heavy duty (machined, hardened steel)/ set screw
3950X Gear, 20-T pinion (32-p), heavy duty (machined, hardened steel)/ set screw
3951X Gear, 21-T pinion (32-p), heavy duty (machined, hardened steel)/ set screw
3952X Gear, 22-T pinion (32-p), heavy duty (machined, hardened steel)/ set screw
6745 Gear, 9-T pinion (32-p) (steel)/ set screw
6842 Spur gear, 50-tooth (0.8 metric pitch, compatible with 32-pitch)
6842R Spur gear, 50-tooth (0.8 metric pitch, compatible with 32-pitch) (for center differential)
6843 Spur gear, 52-tooth (0.8 metric pitch, compatible with 32-pitch)
6843R Spur gear, 52-tooth (0.8 metric pitch, compatible with 32-pitch) (for center differential)
3956 Spur gear, 54-tooth (0.8 metric pitch, compatible with 32-pitch)
3956R Spur gear, 54-tooth (0.8 metric pitch, compatible with 32-pitch) (requires #6814 center differential)
3956X Spur gear, steel, 54-tooth (0.8 metric pitch, compatible with 32-pitch) (requires #6780 center differential)

Steering Components

1552 Screws, 3x8mm cap-head machine (hex drive) (6)/washers (6)/ wrench
5114 Ball bearings, blue rubber sealed (5x8x2.5mm) (2)
6845A Drag link, machined 6061-T6 aluminum (blue-anodized)
6845G Drag link, machined 6061-T6 aluminum (green-anodized)
6845T Drag link, machined 6061-T6 aluminum (orange-anodized)
6845R Drag link, machined 6061-T6 aluminum (red-anodized)
6846 Linkage, steering (3x20mm turnbuckle) (1)/ rod ends (2)/ hollow balls (2)
2742 Rod ends, long (6)/ hollow ball connectors (6)
6845X Steering bellcranks/ servo saver/ servo saver spring/ servo spring retainer/servo horn, steering
6742X Toe links (TUBES blue-anodized, 7075-T6 aluminum, stronger than titanium) (87mm) (2)/ rod ends (4)/ aluminum wrench (1)
6742G Toe links (TUBES green-anodized, 7075-T6 aluminum, stronger than titanium) (87mm) (2)/ rod ends (4)/ aluminum wrench (1)
6742R Toe links (TUBES red-anodized, 7075-T6 aluminum, stronger than titanium) (87mm) (2)/ rod ends (4)/ aluminum wrench (1)
2746 Washers, 3x6mm metal (12)

Suspension Linkage

3643X Camber links, front (TUBES blue-anodized, 7075-T6 aluminum, stronger than titanium) (83mm) (2)/ rod ends (4)/ aluminum wrench (1) (#2579 3x15 BCS (4) required for installation)
3643G Camber links, front (TUBES green-anodized, 7075-T6 aluminum, stronger than titanium) (83mm) (2)/ rod ends (4)/ aluminum wrench (1) (#2579 3x15 BCS (4) required for installation)
3643R Camber links, front (TUBES red-anodized, 7075-T6 aluminum, stronger than titanium) (83mm) (2)/ rod ends (4)/ aluminum wrench (1) (#2579 3x15 BCS (4) required for installation)
3644X Camber links, rear (TUBES blue-anodized, 7075-T6 aluminum, stronger than titanium) (73mm) (2)/ rod ends (4)/ aluminum wrench (1) (#2579 3x15 BCS (4) required for installation)
3644G Camber links, rear (TUBES green-anodized 7075-T6 aluminum, stronger than titanium) (73mm) (2)/ rod ends (4)/ aluminum wrench (1) (#2579 3x15 BCS (4) required for installation)
3644R Camber links, rear (TUBES red-anodized, 7075-T6 aluminum, stronger than titanium) (73mm) (2)/ rod ends (4)/ aluminum wrench (1) (#2579 3x15 BCS (4) required for installation)
5525 Rod ends (12)/ hollow balls (12)
6834 Suspension pin set, complete (front and rear)
2537 Threaded rods (20/25/44mm 1 ea.)/ (1) 12mm set screw
3644 Turnbuckles, camber link, 39mm (69mm center to center) (assembled with rod ends and hollow balls) (1 left, 1 right) (fits front & rear on Slash)
3643 Turnbuckles, camber link, 49mm (82mm center to center) (assembled with rod ends and hollow balls) (1 left, 1 right)
5539 Turnbuckles, camber links, 58mm (assembled with rod ends and hollow balls) (2)

Team Traxxas Items

2514 Decal sheet, racing sponsors
6160X DVD, Maxx® Power! Full Throttle Action (sleeve)
9950 Official Team Traxxas® racing decal set (flag logo/ 6-color)
9909 Traxxas® racing banner, red & black (3x7 feet)

Tires & Wheels

5116 Ball bearings, blue rubber sealed (5x11x4mm) (2)
5854 Hub retainer, 17mm hubs, M4 X 0.7 (4) (use with #5853X, #6856X, #6469)
3647 Nuts, 4mm flanged nylon locking (steel, serrated) (8)
1747R Nuts, aluminum, flanged, serrated (4mm) (blue-anodized) (4)
1747G Nuts, aluminum, flanged, serrated (4mm) (green-anodized) (4)
1747P Nuts, aluminum, flanged, serrated (4mm) (pink-anodized) (4)
1985 PTFE-coated washers, 5x8x0.5mm (20) (use with ball bearings)
1647 Silicone grease
2754 Stub axle pins (4)
4175 Tires & wheels, assembled, glued (2.8") (All-Star black chrome wheels, paddle tires, foam inserts) (nitro rear/ 4WD electric front/rear) (2) (TSM rated)
3669A Tires & wheels, assembled, glued (2.8") (All-Star black chrome wheels, Talon tires, foam inserts) (front/rear, Stampede 4x4) (2)
3669 Tires & wheels, assembled, glued (2.8") (All-Star chrome wheels, Talon tires, foam inserts) (front/rear, Stampede 4x4) (2)
6792 Tires & wheels, assembled, glued (black 2.8" wheels, Sledgehammer™ tires, foam inserts) (2) (TSM® rated)
3671 Tires, Talon 2.8" (2)/ foam inserts (2)
1654 Wheel hubs, hex (rear) (2)/ stub axle pins (2)
6856X Wheel hubs, splined, 17mm, short (4)/ wheel nuts, splined, 17mm (4) (blue-anodized)/ hub retainer M4 X 0.7 (4)/ axle pin (4)/ wrench, 5mm
5353 Wheel nuts, splined, 17mm (blue-anodized) (4)
5480X Wheel wrench, splined, 17mm
5576A Wheels, All-Star 2.8" (black chrome) (front/rear, Stampede 4x4) (2)
5576 Wheels, All-Star 2.8" (chrome) (Stampede 4x4 front or rear) (2)
5572 Wheels, Twin-Spoke 2.8" (chrome) (front/rear, Stampede 4x4) (2)

Traxxas Tools

3433X Body reamer (aluminum handle)
3433 Body reamer (plastic handle)
3436 Cap, body reamer
3432 Scissors, curved tip
3431 Scissors, straight tip
8712 Speed Bit Essentials Set, hex and nut driver, 7-piece, includes premium handle (medium), travel pouch, hex drivers (straight: 1.5mm, 2.0mm, 2.5mm) and nut drivers (5.0mm, 5.5mm, 7.0mm, and 8.0mm), 1/4" drive
8721 Speed bit handle, medium (one piece)
8720 Speed bit handle, premium, large (rubber overmold)
8722 Speed bit handle, premium, medium (rubber overmold)
8710 Speed Bit Master Set, hex and nut driver, 13-piece, includes premium handle (medium), travel pouch, hex drivers (straight: 1.5mm, 2.0mm, 2.5mm, 3.0mm), (ball-end: 2.0mm, 2.5mm, 3.0mm), and nut drivers (4.00mm, 4.50mm, 5.00mm, 5.50mm, 7.00mm, 8.00mm),
8711 Speed Bit Master Set, hex driver, 7-piece straight and ball end, includes premium handle (medium), travel pouch, hex drivers (straight: 1.5mm, 2.0mm, 2.5mm, 3.0mm) (ball end: 2.0mm, 2.5mm, 3.0mm), 1/4" drive
8719 Speed Bit Master Set, nut driver, 6-piece, includes premium handle (medium), travel pouch, and nut drivers (4.0mm, 4.5mm, 5.0mm, 5.5mm, 7.0mm, 8.0mm), 1/4" drive
8716 Speed Bit Set, hex driver, 2-piece ball-end (2.0mm, 2.5mm), 1/4" drive
8716X Speed Bit Set, hex driver, 3-piece ball-end (2.0mm, 2.5mm, 3.0mm), 1/4" drive
8715 Speed Bit Set, hex driver, 3-piece straight (1.5mm, 2.0mm, 2.5mm), 1/4" drive
8715X Speed Bit Set, hex driver, 4-piece straight (1.5mm, 2.0mm, 2.5mm, 3.0mm), 1/4" drive
3415 Tool set with pouch (includes 1.5mm, 2.0mm, 2.5mm, 3.0mm, 3.5mm, 4mm drivers/ 4mm, 5mm, 5.5mm, 7mm and 8mm nut drivers/ 2mm, 4mm, and 5mm slotted screwdrivers/ #00 Phillips, #0 Phillips, and #1 Phillips screwdrivers/ 4mm and 8mm wrench/ driver handle

Turnbuckles & Threaded Rods

3643X	**Camber links, front (TUBES blue-anodized, 7075-T6 aluminum, stronger than titanium) (83mm) (2)/ rod ends (4)/ aluminum wrench (1) (#2579 3x15 BCS (4) required for installation)**
3643G	**Camber links, front (TUBES green-anodized, 7075-T6 aluminum, stronger than titanium) (83mm) (2)/ rod ends (4)/ aluminum wrench (1) (#2579 3x15 BCS (4) required for installation)**
3643R	**Camber links, front (TUBES red-anodized, 7075-T6 aluminum, stronger than titanium) (83mm) (2)/ rod ends (4)/ aluminum wrench (1) (#2579 3x15 BCS (4) required for installation)**
3644X	**Camber links, rear (TUBES blue-anodized, 7075-T6 aluminum, stronger than titanium) (73mm) (2)/ rod ends (4)/ aluminum wrench (1) (#2579 3x15 BCS (4) required for installation)**
3644G	**Camber links, rear (TUBES green-anodized 7075-T6 aluminum, stronger than titanium) (73mm) (2)/ rod ends (4)/ aluminum wrench (1) (#2579 3x15 BCS (4) required for installation)**
3644R	**Camber links, rear (TUBES red-anodized, 7075-T6 aluminum, stronger than titanium) (73mm) (2)/ rod ends (4)/ aluminum wrench (1) (#2579 3x15 BCS (4) required for installation)**
5525	Rod ends (12)/ hollow balls (12)
6742X	**Toe links (TUBES blue-anodized, 7075-T6 aluminum, stronger than titanium) (87mm) (2)/ rod ends (4)/ aluminum wrench (1)**
6742G	**Toe links (TUBES green-anodized, 7075-T6 aluminum, stronger than titanium) (87mm) (2)/ rod ends (4)/ aluminum wrench (1)**
6742R	**Toe links (TUBES red-anodized, 7075-T6 aluminum, stronger than titanium) (87mm) (2)/ rod ends (4)/ aluminum wrench (1)**
3644	Turnbuckles, camber link, 39mm (69mm center to center) (assembled with rod ends and hollow balls) (1 left, 1 right) (fits front & rear on Slash)
3643	Turnbuckles, camber link, 49mm (82mm center to center) (assembled with rod ends and hollow balls) (1 left, 1 right)
5539	Turnbuckles, camber links, 58mm (assembled with rod ends and hollow balls) (2)

If you have questions or need technical assistance, call Traxxas at:

1-888-TRAXXAS

(1-888-872-9927) (U.S. residents only)

For orders, calls outside the U.S., and other information, call 972-549-3000, or fax to 972-549-3011 e-mail Traxxas at support@Traxxas.com

TRAXXAS.com

REV. 201002 1233

SLASH 4X4

MODEL 68054-1

1/10 SCALE 4WD BRUSHLESS
SHORT COURSE TRUCK



WATERPROOF XL-5 ESC AND TITAN 12T MOTOR

TQ 2.4GHz TRANSMITTER

HIGH-CAPACITY 3000 MAH 7-CELL BATTERY AND INCLUDED DC CHARGER

BUILT SLASH TOUGH!

The Traxxas Slash set the standard for durability, performance, and fun by which all other short course trucks are measured. The new Slash 4X4 combines the best elements of the hardcore Slash 4X4 VXL with an unbeatable low price. Outfitted with the powerful Titan 12T 550 motor and bulletproof reliability of the waterproof XL-5 electronic speed control, the Slash takes on any high-flying, fender-banging, all-weather adventure you can throw at it. Grab your transmitter, rip some 4-wheel roost, and discover why nothing else is built like a Slash!

*With 6S LiPo battery and optional gearing

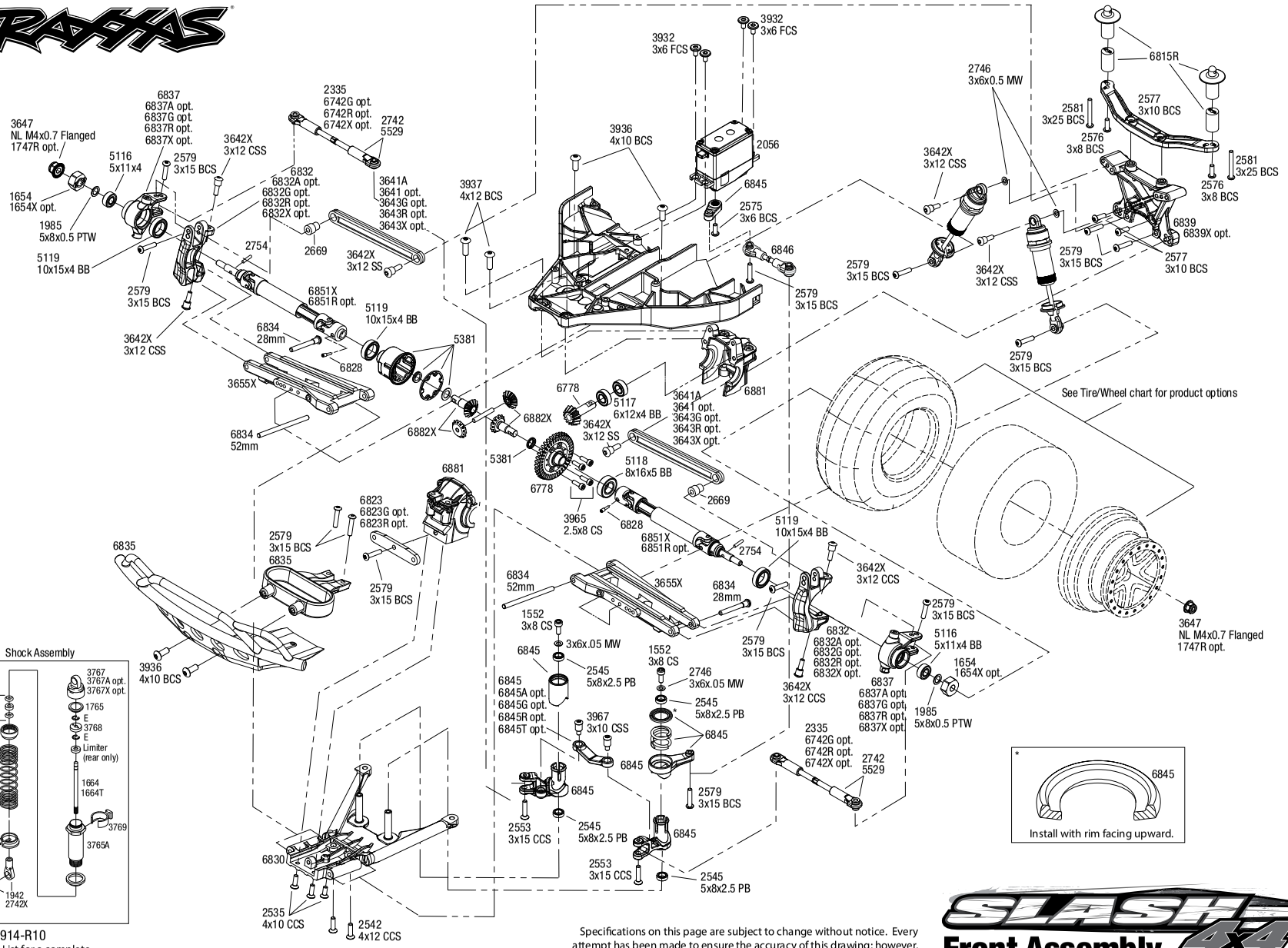

Shock Assembly

REV 200914-R10

See Parts List for a complete listing of optional accessories.

Specifications on this page are subject to change without notice. Every attempt has been made to ensure the accuracy of this drawing; however, Traxxas cannot be held responsible for typographical or other errors.

SLASH 4x4 Front Assembly

SLASH® 4X4 (68054-1)

Chassis Assembly

See Parts List for a complete listing of optional accessories.

REV 200914-R10

Specifications on this page are subject to change without notice. Every attempt has been made to ensure the accuracy of this drawing; however, Traxxas cannot be held responsible for typographical or other errors.

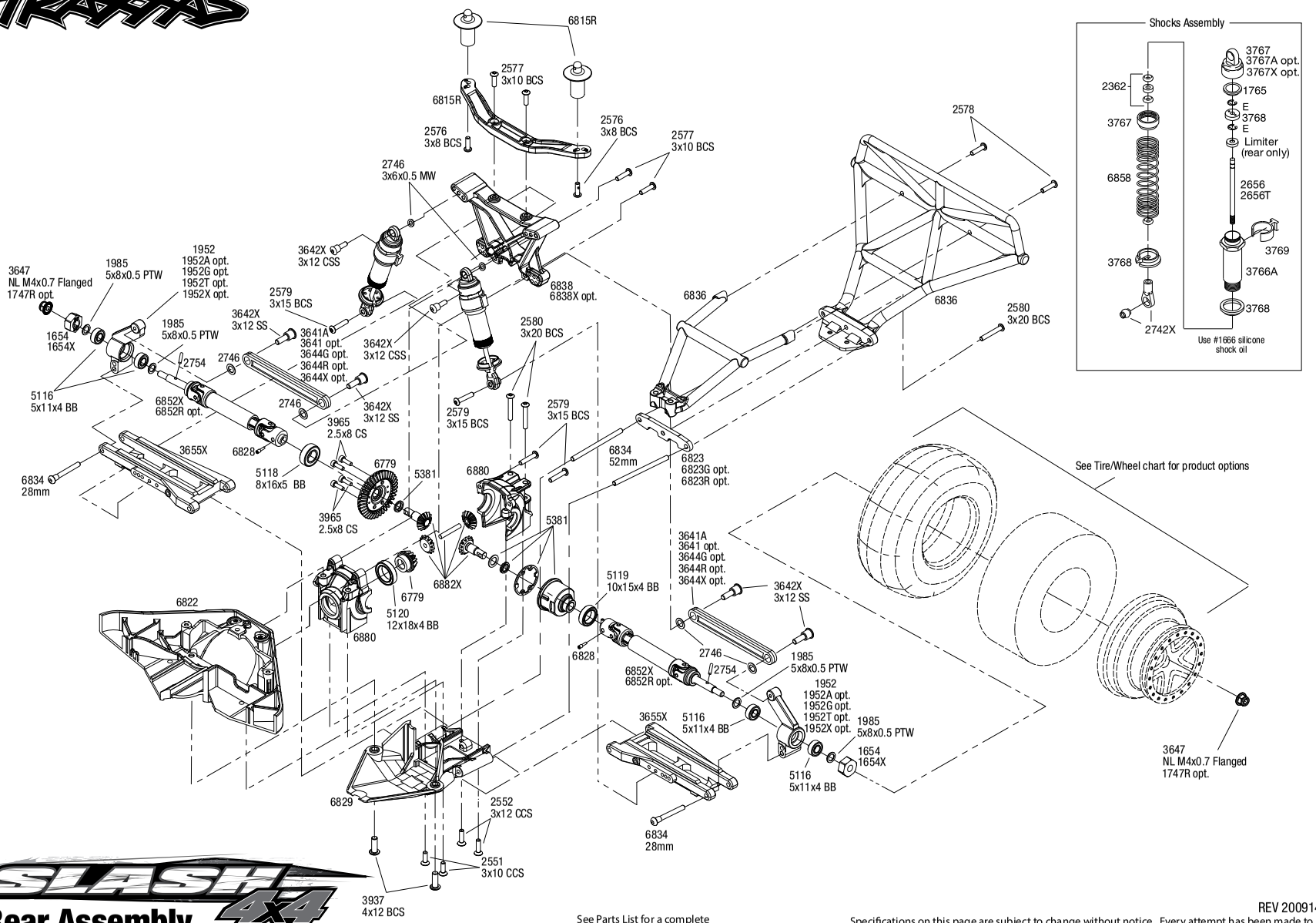

SLASH 4x4
Rear Assembly

See Parts List for a complete listing of optional accessories.

REV 200914-R10

Specifications on this page are subject to change without notice. Every attempt has been made to ensure the accuracy of this drawing; however, Traxxas cannot be held responsible for typographical or other errors.

Questions? Call toll-free, 1-888-TRAXXAS

SLASH 4x4

Transmission Assembly

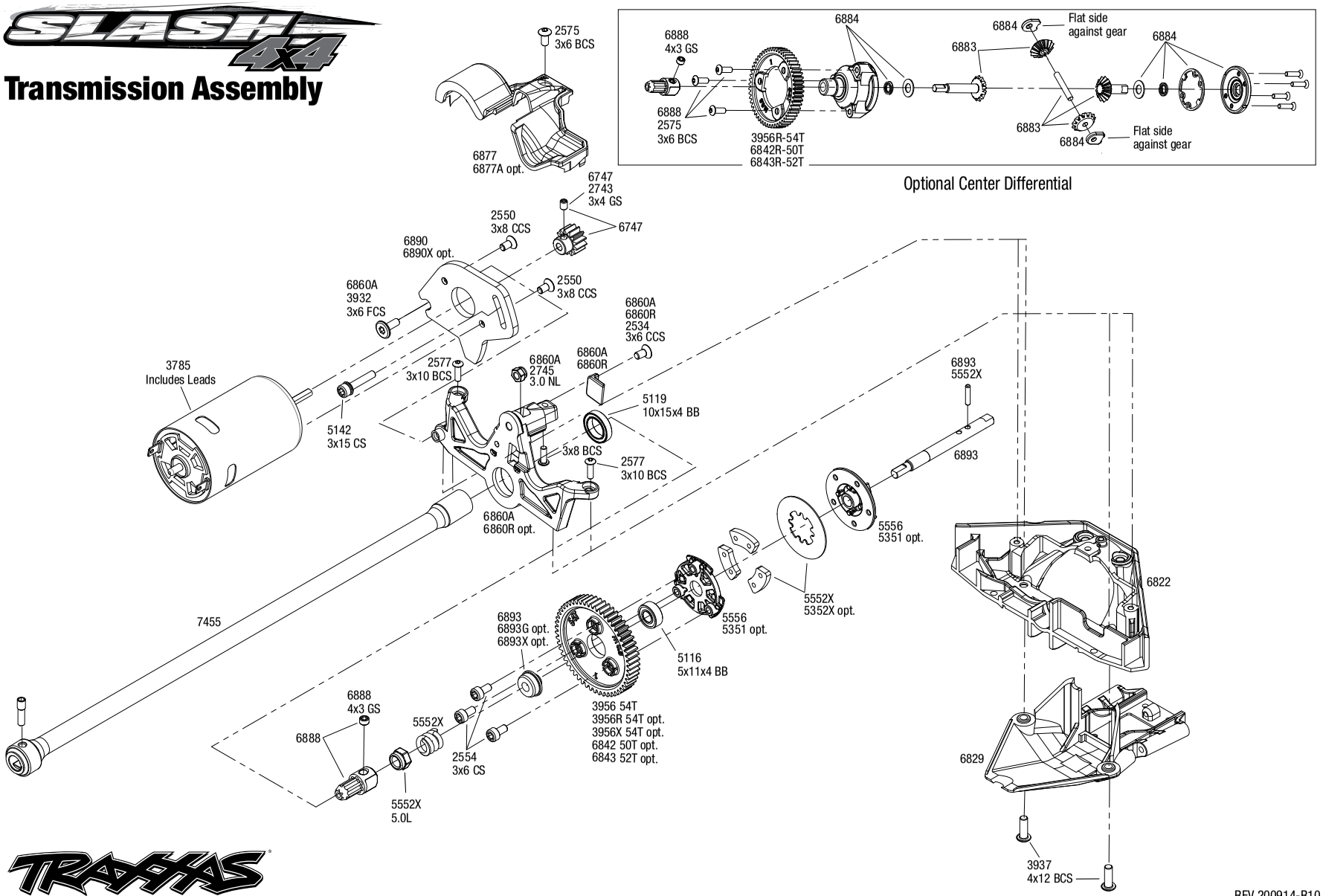

See Parts List for a complete listing of optional accessories.

REV 200914-R10

Specifications on this page are subject to change without notice. Every attempt has been made to ensure the accuracy of this drawing; however, Traxxas cannot be held responsible for typographical or other errors.

Driveshafts

Rear Driveshaft Assembly
Available fully assembled as part #6852X

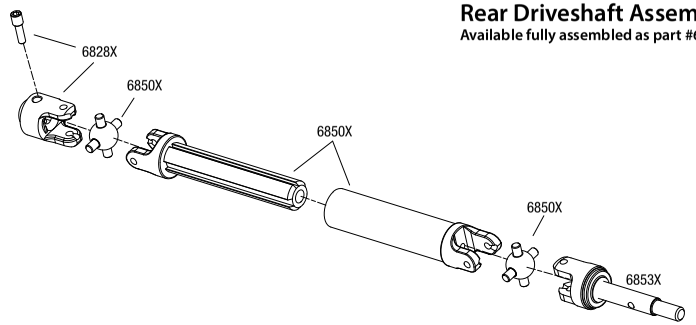

Front Driveshaft Assembly
Available fully assembled as part #6851X

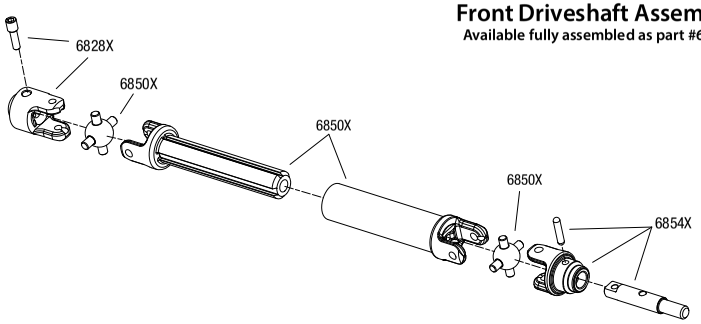

Modular Assembly

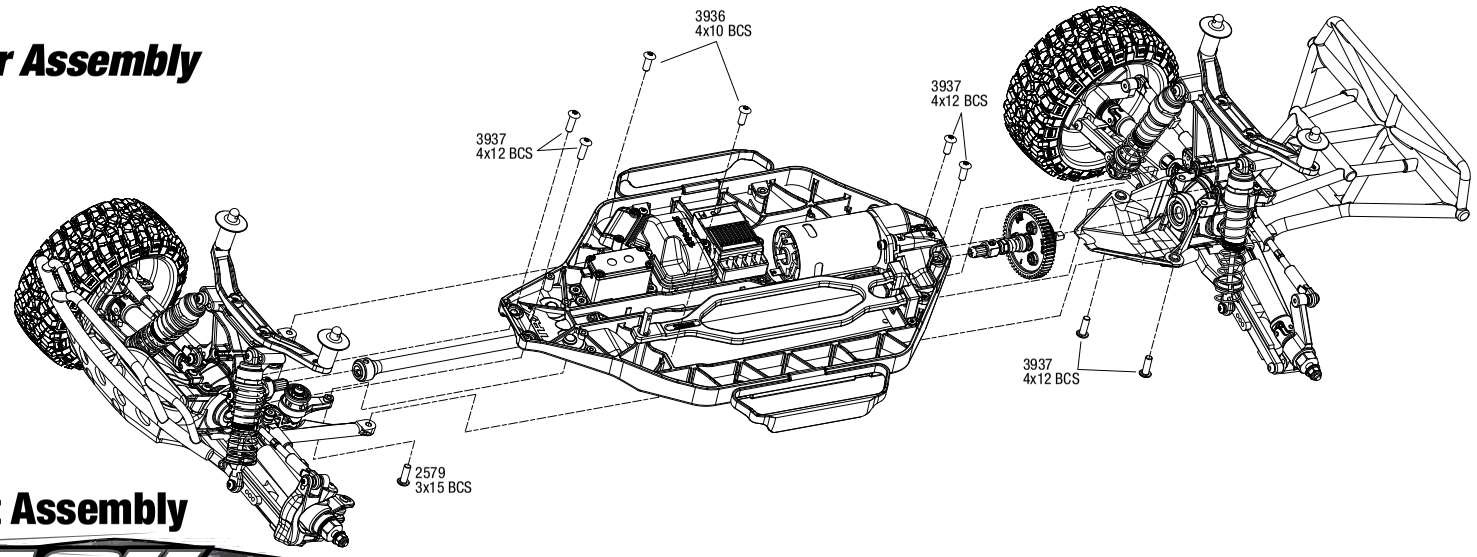

Driveshaft Assembly

REV 200914-R10

Specifications on this page are subject to change without notice.
Every attempt has been made to ensure the accuracy of this drawing; however, Traxxas cannot
be held responsible for typographical or other errors. See Parts List for a complete listing of optional accessories.

SLASH® 4X4 (68054-1)

PARTS SHOWN IN BOLD ARE OPTIONAL ACCESSORIES.

Part categories and individual part listings are arranged alphabetically.

Bearings & Bushings

4607	**Ball bearings (5x11x4mm) (8)**
4612	**Ball bearings (10x15x4mm) (2)**
2728	**Ball bearings (5x8x2.5mm) (2)**
5119A	Ball bearings, black rubber sealed (10x15x4mm) (2)
5119	Ball bearings, blue rubber sealed (10x15x4mm) (2)
5120	Ball bearings, blue rubber sealed (12x18x4mm) (2)
5116	Ball bearings, blue rubber sealed (5x11x4mm) (2)
5114	**Ball bearings, blue rubber sealed (5x8x2.5mm) (2)**
5117	Ball bearings, blue rubber sealed (6x12x4mm) (2)
5118	Ball bearings, blue rubber sealed (8x16x5mm) (2)
2545	Bellcrank bushings (plastic) (5x8x2.5mm) (4)
3934	Body clips, heavy duty (12)
1985	PTFE-coated washers, 5x8x0.5mm (20) (use with ball bearings)

Body & Accessories

1926	Antenna caps, vinyl (2)/ antenna spool
1726	Antenna, tube (1)/ vinyl antenna cap (1)/ wire retainer (1)
3935	Body clip (mounting clip), angled, 90-degrees (10)
3935A	**Body clip (mounting clip), angled, 90-degrees (black) (10)**
3934	Body clips, heavy duty (12)
6815R	Body mount (1)/ body mount post (2)/ body post extensions (2) (front or rear)
1815	Body washers (8)
6716	**Body washers, foam, 2mm (2)/ 3mm (2)/ 4mm (4)**
6811	**Body, Slash 4X4 (clear, requires painting)/ window masks/ decal sheet**
6816G	Body, Slash 4X4, green (painted, decals applied)
6811R	**Body, Slash 4X4, heavy duty (clear, untrimmed, requires painting)/ window masks/ decal sheet**
6816	Body, Slash 4X4, orange (painted, decals applied)
6811X	**Body, Slash 4X4, ProGraphix (Graphics are printed, requires paint & final color application)/ decal sheet**
6849	**Body, Slash 4X4/Slash, Fox Edition (painted, decals applied)**
2514	**Decal sheet, racing sponsors**
6813R	Decal sheet, Slash 4X4
9950	**Official Team Traxxas® racing decal set (flag logo/ 6-color)**

Center Driveline

5119A	Ball bearings, black rubber sealed (10x15x4mm) (2)
5119	Ball bearings, blue rubber sealed (10x15x4mm) (2)
5120	Ball bearings, blue rubber sealed (12x18x4mm) (2)
5116	Ball bearings, blue rubber sealed (5x11x4mm) (2)
5117	Ball bearings, blue rubber sealed (6x12x4mm) (2)
6893G	**Bearing adapter, 6061-T6 aluminum (green-anodized) (1)/ 10x15x4mm ball bearing (black rubber sealed) (1) (for slipper shaft)**
6893X	**Bearing adapter, 6160-T6 aluminum (blue-anodized) (1)/10x15x4mm ball bearing (blue rubber sealed) (1) (for slipper shaft)**
6841	Cover, center driveshaft (clear)
6877A	**Cover, gear (clear)**
6877	Cover, gear/ motor wire hold-down clip
6814	**Differential kit, center (complete)**
6888	Drive hub, center, rear (1)/ 4x3 GS (1)
6855	**Driveshaft, center, 6061-T6 aluminum (blue-anodized)**
6855G	**Driveshaft, center, 6061-T6 aluminum (green-anodized)**
6855R	**Driveshaft, center, 6061-T6 aluminum (red-anodized)**
6883	**Gear set, center differential (output gears (2)/ spider gears (2)/ spider gear shaft)**
5148	Grease, white lithium
6884	**Housing, center differential/ x-ring gaskets (2)/ ring gear gasket/ bushings (2)/ 5x10x0.5 TW (2)/ CCS 2.5x8 (4)**
6893	Input shaft (slipper shaft)/ bearing adapter (1)/pin (1)
6890	Plate, motor
6890X	**Plate, motor, 6061-T6 aluminum (blue-anodized)**
5352R	**Rebuild kit (heavy duty), slipper clutch (steel disc/ aluminum friction pads (3)/ spring (1)/ 2x9.8mm pin/ 5x8mm MW/ 5.0mm NL (1)/ 4.0mm NL (1))**
5352X	**Rebuild kit, slipper clutch (steel disc/ friction pads (3)/ spring (2)/ 2x9.8mm pin/ 5x8mm MW/ 5.0mm NL (1)/ 4.0mm NL (1))**
5552X	**Rebuild kit, slipper clutch (steel disc/ friction pads (3)/ spring (2)/ pin/ 4.0mm NL (1)/ 5.0mm NL (1))**
2575	Screws, 3x6mm button-head machine (hex drive) (6)
2554	Screws, 3x6mm cap-head machine (hex drive) (6)
3932	Screws, 3x6mm flat-head machine (hex drive) (6)
1647	Silicone grease
6878	Slipper clutch, complete
5556	Slipper pressure plate & hub (aluminum alloy)
5351	**Slipper pressure plate and hub (alloy)**

Chassis & Attachments

6815R	Body mount (1)/ body mount post (2)/ body post extensions (2) (front or rear)
3924	Box, receiver (sealed)/ foam pad/ silicone grease/2.5x8mm BCS (2)/ 3x10mm CCS (2)/ 3x15mm CCS (2)
3628	**Box, receiver (sealed)/ foam pad/2.5x8mm CS (4)/ 3x10mm CS (2)**
6835	Bumper, front/ bumper mount, front (black)
6836	Bumper, rear/ bumper mount, rear (black)
7421	**Chassis conversion kit, low CG (Slash 4x4)**
6822	Chassis, Slash 4X4
6841	Cover, center driveshaft (clear)
5827	Hold down, battery/ hold down retainer/ battery post/ foam spacer/ angled body clip
5827X	**Hold down, battery/ hold down retainer/ battery post/ foam spacer/ angled body clip (allows for installation of taller, multi-cell batteries)**
6840	**Mount, Go-pro camera, fiberglass**
3629	**Seal kit, receiver box (includes o-ring, seals, and silicone grease)**
3925	Seal kit, receiver box (includes o-ring, seals, and silicone grease)

Differential Components

5119	Ball bearings, blue rubber sealed (10x15x4mm) (2)
5117	Ball bearings, blue rubber sealed (6x12x4mm) (2)
5118	Ball bearings, blue rubber sealed (8x16x5mm) (2)
5381	Carrier, differential/ x-ring gaskets (2)/ ring gear gasket/ 6x10x0.5 TW
6780	**Differential kit, center (complete)**
6814	**Differential kit, center (complete)**
6783	**Gear set, center differential (output gears (2)/ spider gears (4)/ spider gear shaft (2))**
6882X	Gear set, differential (output gears (2)/ spider gears (2)/ spider gear shaft, carrier support)
6781	**Housing, center differential (aluminum)/ x-ring gaskets (2)/ ring gear gasket/ bushings (2)/ 5x10x0.5mm PTFE-coated washers (2)/ 2.5x8 CCS (4)**
6881	Housings, differential, front
6880	Housings, differential, rear
6782	**Output gears, center differential, hardened steel (2)**
5379X	**Ring gear, differential/ pinion gear, differential**
6778	Ring gear, differential/ pinion gear, differential (12/47 ratio) (front)
6779	Ring gear, differential/ pinion gear, differential (12/47 ratio) (rear)
5379R	**Ring gear, differential/ pinion gear, differential (machined, spiral cut) (front)**
6879R	**Ring gear, differential/ pinion gear, differential (machined, spiral cut) (rear)**
6879	**Ring gear, differential/ pinion gear, differential (rear)**
3965	Screws, 2.5x8mm cap-head machine (6)
1647	Silicone grease

Driveline Components

5119A	Ball bearings, black rubber sealed (10x15x4mm) (2)
5119	Ball bearings, blue rubber sealed (10x15x4mm) (2)
5116	Ball bearings, blue rubber sealed (5x11x4mm) (2)
9059X	**Cross pin (2)/ drive pin (2) (repairs 2 axle shafts)**
9057X	**Differential output shafts, steel-splined constant-velocity (2)**
6828A	**Differential output yoke assembly, extreme heavy duty (2) (left or right, front or rear) (assembled with external-splined half shaft)**
6828X	Differential output yokes, heavy duty (2)/ screw pin (2)
6851X	Driveshaft assembly, front, heavy duty (1) (left or right) (fully assembled, ready to install)/ screw pin (1)
6852X	Driveshaft assembly, rear, heavy duty (1) (left or right) (fully assembled, ready to install)/ screw pin (1)
6855	**Driveshaft, center, 6061-T6 aluminum (blue-anodized)**
6855G	**Driveshaft, center, 6061-T6 aluminum (green-anodized)**
6855R	**Driveshaft, center, 6061-T6 aluminum (red-anodized)**
7455	Driveshaft, center, plastic (black)/ screw pin
6851R	**Driveshafts, front, steel-spline constant-velocity (complete assembly) (2)**
9051X	**Driveshafts, front, steel-spline constant-velocity (complete assembly) (2)**
6852R	**Driveshafts, rear, steel-spline constant-velocity (complete assembly) (2)**
9052X	**Driveshafts, rear, steel-spline constant-velocity (complete assembly) (2)**

9055X **Half shaft, external splined (steel-spline constant velocity) (1)**
6750 **Half shaft, external splined (steel-spline constant-velocity) (1)**
9056X **Half shaft, internal splined (steel-spline constant velocity) (1)**
6751 **Half shaft, internal splined (steel-spline constant-velocity) (1)**
6850X Half shafts, heavy duty (external splined (2)/ internal splined (2))/ metal u-joints (4)
6757 **Rebuild kit, steel-splined constant-velocity driveshafts (includes pins, dustboots, lube, and hardware)**
9058X **Rebuild kit, steel-splined constant-velocity driveshafts (includes pins, lube, and hardware for two axle shafts)**
6854A **Stub axle assembly, front, outer, extreme heavy duty (1) (left or right) (assembled with internal-splined half shaft)**
6853A **Stub axle assembly, rear, outer, extreme heavy duty (1) (left or right) (assembled with internal-splined half shaft)**
6754 **Stub axle, front, 5mm (steel-splined constant-velocity driveshaft) (1)**
9054X **Stub axle, front, steel-splined constant velocity (1)**
6753 **Stub axle, rear, 5mm (steel-splined constant-velocity driveshaft) (1)**
9053X **Stub axle, rear, steel-splined constant velocity (1)**
6854X Stub axles, front, heavy duty (2)/ yokes (2)/ pins (4)
6853X Stub axles, rear, heavy duty (2)/pins (2)

Front Suspension & Steering

2728 Ball bearings (5x8x2.5mm) (2)
6823 Bulkhead tie bars, front & rear, aluminum (blue-anodized)
6823G **Bulkhead tie bars, front & rear, aluminum (green-anodized)**
6823R **Bulkhead tie bars, front & rear, aluminum (red-anodized)**
6830X Bulkhead, front
3641A Camber link set (plastic / non-adjustable) (front & rear) (grey)
3641 **Camber link set (plastic/ non-adjustable) (front & rear) (black)**
3643X **Camber links, front (TUBES blue-anodized, 7075-T6 aluminum, stronger than titanium) (83mm) (2)/ rod ends (4)/ aluminum wrench (1) (#2579 3x15 BCS (4) required for installation)**
3643G **Camber links, front (TUBES green-anodized, 7075-T6 aluminum, stronger than titanium) (83mm) (2)/ rod ends (4)/ aluminum wrench (1) (#2579 3x15 BCS (4) required for installation)**
3643R **Camber links, front (TUBES red-anodized, 7075-T6 aluminum, stronger than titanium) (83mm) (2)/ rod ends (4)/ aluminum wrench (1) (#2579 3x15 BCS (4) required for installation)**
6832X **Caster blocks (c-hubs), 6061-T6 aluminum (blue-anodized), left & right**
6832G **Caster blocks (c-hubs), 6061-T6 aluminum (green-anodized), left & right**
6832A **Caster blocks (c-hubs), 6061-T6 aluminum (orange-anodized), left & right**
6832R **Caster blocks (c-hubs), 6061-T6 aluminum (red-anodized), left & right**
6832 Caster blocks (c-hubs), left & right
6845A **Drag link, machined 6061-T6 aluminum (blue-anodized)**
6845G **Drag link, machined 6061-T6 aluminum (green-anodized)**
6845T **Drag link, machined 6061-T6 aluminum (orange-anodized)**
6845R **Drag link, machined 6061-T6 aluminum (red-anodized)**
6895 **Linkage, front sway bar (2) (assembled with rod ends, hollow balls and ball studs)**
6897 **Linkage, rear sway bar (2) (assembled with rod ends, hollow balls and ball studs)**
6846 Linkage, steering (3x20mm turnbuckle) (1)/ rod ends (2)/ hollow balls (2)
3646 Screws, 3x15mm flat-head machine (hex drive) (6)
6839 Shock tower, front
6839X **Shock tower, front, 7075-T6 aluminum (blue-anodized)**
6845X Steering bellcranks/ servo saver/ servo saver spring/ servo spring retainer/servo horn, steering
6837X **Steering blocks, 6061-T6 aluminum (blue-anodized), left & right**
6837G **Steering blocks, 6061-T6 aluminum (green-anodized), left & right**
6837A **Steering blocks, 6061-T6 aluminum (orange-anodized), left & right**
6837R **Steering blocks, 6061-T6 aluminum (red-anodized), left & right**
6837 Steering blocks, left & right
6854A **Stub axle assembly, front, outer, extreme heavy duty (1) (left or right) (assembled with internal-splined half shaft)**
6854X Stub axles, front, heavy duty (2)/ yokes (2)/ pins (4)
3655P **Suspension arms, blue, front/rear (left & right), heavy duty (2)**
3655R **Suspension arms, front/rear (left & right), heavy duty (2)**
3655G **Suspension arms, green, front/rear (left & right), heavy duty (2)**
3655X Suspension arms, left & right
3655T **Suspension arms, orange, front/rear (left & right), heavy duty (2)**
3655L **Suspension arms, red, front/rear (left & right), heavy duty (2)**
3655A **Suspension arms, white, front/rear (left & right), heavy duty (2)**
6834 Suspension pin set, complete (front and rear)
6898 **Sway bar kit (front and rear) (includes front and rear sway bars and adjustable linkage)**
6742X **Toe links (TUBES blue-anodized, 7075-T6 aluminum, stronger than titanium) (87mm) (2)/ rod ends (4)/ aluminum wrench (1)**
6742G **Toe links (TUBES green-anodized, 7075-T6 aluminum, stronger than titanium) (87mm) (2)/ rod ends (4)/ aluminum wrench (1)**
6742R **Toe links (TUBES red-anodized, 7075-T6 aluminum, stronger than titanium) (87mm) (2)/ rod ends (4)/ aluminum wrench (1)**
3643 **Turnbuckles, camber link, 49mm (82mm center to center) (assembled with rod ends and hollow balls) (1 left, 1 right)**
5539 **Turnbuckles, camber links, 58mm (assembled with rod ends and hollow balls) (2)**
6896 **Wires, sway bar (front & rear, hard & soft) / 3x6 FCS (4)**

Hardware

1926 Antenna caps, vinyl (2)/ antenna spool
1726 Antenna, tube (1)/ vinyl antenna cap (1)/ wire retainer (1)
1552 Screws, 3x8mm cap-head machine (hex drive) (6)/washers (6)/ wrench
3935 Body clip (mounting clip), angled, 90-degrees (10)
3935A **Body clip (mounting clip), angled, 90-degrees (black) (10)**
3934 Body clips, heavy duty (12)
1589 Double-sided adhesive tape (25mm x 25mm) (2)
2586 Screws, 3x15mm cap-head machine (hex drive) (6)
2745 Nuts, 3mm nylon locking (12)
3647 Nuts, 4mm flanged nylon locking (steel, serrated) (8)
1747 Nuts, 4mm nylon locking (10)
1747A **Nuts, aluminum, flanged, serrated (4mm) (red-anodized) (4)**
1985 PTFE-coated washers, 5x8x0.5mm (20) (use with ball bearings)
5525 Rod ends (12)/ hollow balls (12)
2742X Rod ends, short (6)/ hollow balls (6)
3347 Screws, 2.5x5mm button-head machine (hex drive) (6)
3215 Screws, 2.5x6mm cap-head machine (hex drive) (6)
3965 Screws, 2.5x8mm cap-head machine (6)
2577 Screws, 3x10mm button-head machine (hex drive) (6)
2578 Screws, 3x12mm button-head machine (hex drive) (6)
2552 Screws, 3x12mm countersunk machine (6) (hex drive)
2579 Screws, 3x15mm button-head machine (hex drive) (6)
3646 Screws, 3x15mm flat-head machine (hex drive) (6)
2583 Screws, 3x18mm button-head machine (hex drive) (6)
2580 Screws, 3x20mm button-head machine (hex drive) (6)
2591 Screws, 3x23mm button-head machine (hex drive) (6)
2582 Screws, 3x30mm button-head machine (hex drive) (6)
2592 Screws, 3x40mm button-head machine (hex drive) (6)
2575 Screws, 3x6mm button-head machine (hex drive) (6)
2534 Screws, 3x6mm countersunk machine (6) (hex drive)
3932 Screws, 3x6mm flat-head machine (hex drive) (6)
2576 Screws, 3x8mm button-head machine (hex drive) (6)
3931 Screws, 3x8mm flat-head machine (hex drive) (6)
3937 Screws, 4x12mm button-head machine (hex drive) (6)
2542 Screws, 4x12mm countersunk machine (hex drive) (6)
2546 Screws, 4x15mm countersunk machine (hex drive) (6)
2743 Set (grub) screws, 3mm hardened (12)
3642X Shoulder screws, Ultra Shocks (3x12 hex drive) (6)
2754 Stub axle pins (4)
2748X Tool Set (1.5mm &2.5mm allens/ 4-way lug, 8mm &4mm wrench & U-joint wrenches)
2746 Washers, 3x6mm metal (12)

Motors & Electronics

1726 Antenna, tube (1)/ vinyl antenna cap (1)/ wire retainer (1)
2260 **BEC assembly (complete)**
3340 **Cooling fan, Velineon® VXL-3s ESC**
2072A **Gear set (for 2070, 2075 servos)**
2252 **Gear set, metal (for 2250, 2255 servos)**
3354R **Motor cover, endbell (Velineon® 3500)**
6860A Motor mount (assembled with 3x6 flat-head machine screw)/ 3.0mm NL (1)
6860R **Motor mount, 6061-T6 aluminum (blue-anodized)**
3785 Motor, Titan® 12T (12-Turn, 550 size)
3351R **Motor, Velineon® 3500, brushless (assembled with 12-gauge wire and gold-plated bullet connectors)**
3347 Screws, 2.5x5mm button-head machine (hex drive) (6)
3932 Screws, 3x6mm flat-head machine (hex drive) (6)
2254 **Servo case, aluminum (blue-anodized) (middle) (for 2250 servo)**
2253 **Servo case, aluminum (red-anodized) (middle) (for 2255 servo)**
2251 **Servo case, plastic (top, middle, bottom)/ gaskets/ hardware (for 2250, 2255 servos)**
2074 **Servo case/gaskets (for 2056 and 2075 waterproof servos)**
2053 Servo gears (for 2055, 2056 servos)
2075R **Servo, digital high-speed, metal gear (ball bearing), waterproof**
2075 **Servo, digital high-torque (ball bearing), waterproof**
2250 **Servo, digital high-torque 330 coreless, metal gear (ball bearing), waterproof**

BFGoodrich® Tires Trademarks are used under license from Michelin Group Companies.

SLASH® 4X4 (68054-1)

2255 **Servo, digital high-torque 400 brushless, metal gear (ball bearing), waterproof**
2075X **Servo, digital high-torque, metal gear (ball bearing), waterproof**
2056 Servo, high-torque, waterproof (blue case)
3350R **Velineon® VXL-3s Brushless Power System, waterproof (includes VXL-3s waterproof ESC, Velineon 3500 motor, and speed control mounting plate (part #3725R))**
3355R **Velineon® VXL-3s Electronic Speed Control, waterproof (brushless) (fwd/rev/brake)**
3018R XL-5 Electronic Speed Control, waterproof (land version, low-voltage detection, fwd/rev/brake)

Radio System, Batteries & Chargers

2842X **5000mAh 7.4v 2-Cell 25C LiPo Battery**
2843X **5800mAh 7.4v 2-Cell 25C LiPo Battery**
2869X **7600mAh 7.4v 2-Cell 25C LiPo Battery**
2976 **AC to DC converter, 40W**
2938X **Adapter, Traxxas® iD® LiPo battery (adapts Traxxas iD batteries to separate balance ports)**
2943 **Battery charge indicators (green (4), blue (4), grey (4))**
6548 Battery door, transmitter (replacement for #6516, 6517, 6528, 6529, 6530 transmitters)
2914 **Battery, Power Cell AA Alkaline (4)**
2923X Battery, Power Cell, 3000mAh (NiMH, 7-C flat, 8.4V)
2926X **Battery, Power Cell, 3000mAh (NiMH, 7-C hump, 8.4V)**
2942X **Battery, Series 3 Power Cell, 3300mAh (NiMH, 6-C flat, 7.2V)**
2940X **Battery, Series 3 Power Cell, 3300mAh (NiMH, 7-C flat, 8.4V)**
2941X **Battery, Series 3 Power Cell, 3300mAh (NiMH, 7-C hump, 8.4V)**
2952X **Battery, Series 4 Power Cell, 4200mAh (NiMH, 6-C flat, 7.2V)**
2950X **Battery, Series 4 Power Cell, 4200mAh (NiMH, 7-C flat, 8.4V)**
2951X **Battery, Series 4 Power Cell, 4200mAh (NiMH, 7-C hump, 8.4V)**
2960X **Battery, Series 5 Power Cell, 5000mAh (NiMH, 7-C flat, 8.4V)**
2961X **Battery, Series 5 Power Cell, 5000mAh (NiMH, 7-C hump, 8.4V)**
2983 **Battery/charger completer pack (includes #2969 2-amp NiMH peak detecting AC charger (1), #2923X 3000mAh 8.4V 7-cell NiMH battery (1))**
2260 **BEC assembly (complete)**
2927R **Charger, AC, 500 mAh (7 cell, NiMH) (US only)**
2975 Charger, DC, 4 amp (6 - 7 cell, 7.2 - 8.4 volt, NiMH)
2972 **Charger, EZ-Peak® Dual, 100W, NiMH/LiPo with iD® Auto Battery Identification**
2973 **Charger, EZ-Peak® Live Dual, 200W, NiMH/LiPo with iD® Auto Battery Identification**
2971 **Charger, EZ-Peak® Live, 100W, NiMH/LiPo with iD® Auto Battery Identification**
2970 **Charger, EZ-Peak® Plus, 4 amp, NiMH/LiPo with iD® Auto Battery Identification**
6525 **Communication link, telemetry expander**
6541 **Connector, power tap (with cable) (long)/ wire tie**
6512 Cover plate, Traxxas Link™ Wireless Module
2978 **Fuse, charger, 5A (2) (for #2974, 2975, 2977)**
2072A **Gear set (for 2070, 2075 servos)**
2252 **Gear set, metal (for 2250, 2255 servos)**
2968X **LiPo cell voltage checker/balancer (includes #2938X adapter for Traxxas® iD® batteries)**
2968 **LiPo cell voltage checker/balancer (requires #2938X adapter for Traxxas® iD® batteries)**
6555 **Mount, telemetry expander (fits Slash 4X4, Stampede® 4X4, Rally, Jato®)**
6535 **Mount, temperature sensor (electric motors)/ wire tie/ thermal pad**
6519 Receiver, micro, TQ 2.4GHz (3-channel)
6533 **Receiver, micro, TQi 2.4GHz with telemetry & TSM (5-channel)**
3932 Screws, 3x6mm flat-head machine (hex drive) (6)
6552 **Seal kit, expander box (includes o-ring, seals, and silicone grease)**
6526 **Sensor, auto-detectable, temperature**
6527 **Sensor, auto-detectable, voltage**
6520 **Sensor, RPM (long)/ 3x4mm BCS (2)/ 3x4 GS (1)**
6521 **Sensor, temperature and voltage (long)**
2254 **Servo case, aluminum (blue-anodized) (middle) (for 2250 servo)**
2253 **Servo case, aluminum (red-anodized) (middle) (for 2255 servo)**
2251 **Servo case, plastic (top, middle, bottom)/ gaskets/ hardware (for 2250, 2255 servos)**
2074 Servo case/gaskets (for 2056 and 2075 waterproof servos)
2053 Servo gears (for 2055, 2056 servos)
2075R **Servo, digital high-speed, metal gear (ball bearing), waterproof**
2075 **Servo, digital high-torque (ball bearing), waterproof**
2250 **Servo, digital high-torque 330 coreless, metal gear (ball bearing), waterproof**
2255 **Servo, digital high-torque 400 brushless, metal gear (ball bearing), waterproof**
2075X **Servo, digital high-torque, metal gear (ball bearing), waterproof**
2056 Servo, high-torque, waterproof (blue case)
6553X **Telemetry expander 2.0 and GPS module 2.0, TQi radio system**
6550X **Telemetry expander 2.0, TQi radio system (for use only with #6551X GPS module)**
6551X **Telemetry GPS module 2.0, TQi radio system (for use only with #6550X telemetry expander)**
6539 **Telemetry trigger magnet holder, center differential/ magnet, 5x2mm (1)/ 3x8mm BCS (3)**
6538 **Telemetry trigger magnet holders, spur gear/ magnet, 5x2mm (1)/ 3x8mm CCS (3)/ 3x10mm CCS (3)**
6540 **Telemetry trigger magnet, 5X2mm (1)**
6509R **TQi 2.4 GHz High Output radio system, 2-channel, Traxxas Link™ enabled, TSM (2-ch transmitter, 5-ch micro receiver)**
6507R **TQi 2.4 GHz High Output radio system, 4-channel with Traxxas Link™ Wireless Module, TSM (4-ch transmitter, 5-ch micro receiver)**
6516 Transmitter, TQ 2.4GHz, 2-channel (transmitter only)
6528 **Transmitter, TQi Traxxas Link™ enabled, 2.4GHz high output, 2-channel (transmitter only)**
6529 **Transmitter, TQi Traxxas Link™ enabled, 2.4GHz high output, 3-channel (transmitter only)**
6530 **Transmitter, TQi Traxxas Link™ enabled, 2.4GHz high output, 4-channel (transmitter only)**
6511 **Traxxas Link™ Wireless Module**
3355R **Velineon® VXL-3s Electronic Speed Control, waterproof (brushless) (fwd/rev/brake)**

Ready-To-Race Model

68054-1 Slash 4X4: 1/10 Scale 4WD Electric Short Course Truck with TQ 2.4GHz Radio System

Rear Suspension

6823 Bulkhead tie bars, front & rear, aluminum (blue-anodized)
6823G **Bulkhead tie bars, front & rear, aluminum (green-anodized)**
6823R **Bulkhead tie bars, front & rear, aluminum (red-anodized)**
6829 Bulkhead, rear
3641A Camber link set (plastic / non-adjustable) (front & rear) (grey)
3641 **Camber link set (plastic/ non-adjustable) (front & rear) (black)**
3644X **Camber links, rear (TUBES blue-anodized, 7075-T6 aluminum, stronger than titanium) (73mm) (2)/ rod ends (4)/ aluminum wrench (1) (#2579 3x15 BCS (4) required for installation)**
3644G **Camber links, rear (TUBES green-anodized 7075-T6 aluminum, stronger than titanium) (73mm) (2)/ rod ends (4)/ aluminum wrench (1) (#2579 3x15 BCS (4) required for installation)**
3644R **Camber links, rear (TUBES red-anodized, 7075-T6 aluminum, stronger than titanium) (73mm) (2)/ rod ends (4)/ aluminum wrench (1) (#2579 3x15 BCS (4) required for installation)**
1952X **Carriers, stub axle (blue-anodized 6061-T6 aluminum) (rear) (2)**
1952G **Carriers, stub axle (green-anodized 6061-T6 aluminum) (rear) (2)**
1952 Carriers, stub axle (rear) (2)
1952A **Carriers, stub axle (red-anodized 6061-T6 aluminum) (rear) (2)**
6895 **Linkage, front sway bar (2) (assembled with rod ends, hollow balls and ball studs)**
6897 **Linkage, rear sway bar (2) (assembled with rod ends, hollow balls and ball studs)**
6838 Shock tower, rear
6838X **Shock tower, rear, 7075-T6 aluminum (blue-anodized)**
6853A **Stub axle assembly, rear, outer, extreme heavy duty (1) (left or right) (assembled with internal-splined half shaft)**
6853X Stub axles, rear, heavy duty (2)/pins (2)
3655P **Suspension arms, blue, front/rear (left & right), heavy duty (2)**
3655R **Suspension arms, front/rear (left & right), heavy duty (2)**
3655G **Suspension arms, green, front/rear (left & right), heavy duty (2)**
3655X Suspension arms, left & right
3655T **Suspension arms, orange, front/rear (left & right), heavy duty (2)**
3655L **Suspension arms, red, front/rear (left & right), heavy duty (2)**
3655A **Suspension arms, white, front/rear (left & right), heavy duty (2)**
6834 Suspension pin set, complete (front and rear)
6898 **Sway bar kit (front and rear) (includes front and rear sway bars and adjustable linkage)**
3644 **Turnbuckles, camber link, 39mm (69mm center to center) (assembled with rod ends and hollow balls) (1 left, 1 right) (fits front & rear on Slash, rear on Slash 4X4)**
6896 **Wires, sway bar (front & rear, hard & soft) / 3x6 FCS (4)**

Shocks (GTR)

7466X **Body, GTR long (hard-anodized, PTFE-coated aluminum) (1)**
7466 **Body, GTR long shock, aluminum (blue-anodized) (PTFE-coated bodies) (1)**
7466G **Body, GTR long shock, aluminum (green-anodized) (PTFE-coated bodies) (1)**
7466A **Body, GTR long shock, aluminum (orange-anodized) (PTFE-coated bodies) (1)**
7467X **Body, GTR xx-long (hard-anodized, PTFE-coated aluminum) (1)**

BFGoodrich® Tires Trademarks are used under license from Michelin Group Companies.

7467 **Body, GTR xx-long shock, aluminum (blue-anodized) (PTFE-coated bodies) (1)**
7467G **Body, GTR xx-long shock, aluminum (green-anodized) (PTFE-coated bodies) (1)**
7467A **Body, GTR xx-long shock, aluminum (orange-anodized) (PTFE-coated bodies) (1)**
7468X **Caps & spring retainers, GTR shock (upper cap (2)/ hollow balls (4)/ bottom cap (2)/ upper retainer (2)/ lower retainer (2))**
7468 **Caps and spring retainers, GTR long/xx-long shock (upper cap (2)/ hollow balls (4)/ bottom cap (2)/ upper retainer (2)/ lower retainer (2))**
5475 **Multi-tool (plastic)**
5158 **Nuts, 2.5mm nylon locking (12)**
7463 **Rebuild kit, GTR long/xx-long shocks (x-rings, bladders, pistons, piston nuts, shock rod ends, hollow balls) (renews 2 shocks)**
5469 **Rod ends (GTR shocks) (6)**
7464T **Shaft, GTR long, TiN-coated (2)**
7461 **Shocks, GTR long blue-anodized, PTFE-coated bodies with TiN shafts (fully assembled, without springs) (2)**
7461G **Shocks, GTR long green-anodized, PTFE-coated bodies with TiN shafts (fully assembled, without springs) (2)**
7461X **Shocks, GTR long hard-anodized, PTFE-coated bodies with TiN shafts (assembled) (2) (without springs)**
7462 **Shocks, GTR xx-long blue-anodized, PTFE-coated bodies with TiN shafts (fully assembled, without springs) (2)**
7462G **Shocks, GTR xx-long green-anodized, PTFE-coated bodies with TiN shafts (fully assembled, without springs) (2)**
7462X **Shocks, GTR xx-long hard-anodized, PTFE-coated bodies with TiN shafts (assembled) (2) (without springs)**
8459 **Spring retainers, lower (captured) (4)/ 2.5x10 CS (4)**
7440 **Spring, shock, white (GTR long) (0.623 rate orange) (1 pair)**
7441 **Spring, shock, white (GTR long) (0.653 rate green) (1 pair)**
7444 **Spring, shock, white (GTR long) (0.767 rate black) (1 pair)**
7445 **Spring, shock, white (GTR long) (0.810 rate pink) (1 pair)**
7448 **Spring, shock, white (GTR long) (0.892 rate blue) (1 pair)**
7442 **Spring, shock, white (GTR xx-long) (0.711 rate orange) (1 pair)**
7443 **Spring, shock, white (GTR xx-long) (0.762 rate green) (1 pair)**
7446 **Spring, shock, white (GTR xx-long) (0.874 rate black) (1 pair)**
7447 **Spring, shock, white (GTR xx-long) (0.884 rate pink) (1 pair)**
7449 **Spring, shock, white (GTR xx-long) (1.004 rate blue) (1 pair)**

Shocks (Pro-level Aluminum)

2664 **Big Bore shock cylinder (long) (1)**
2666 **Big Bore shock cylinder (XX-long) (1)**
5862 **Big Bore shocks (hard-anodized & PTFE-coated T6 aluminum) (assembled with TiN shafts and springs) (front & rear) (4)**
2660 **Big Bore shocks (long) (hard-anodized & PTFE-coated T6 aluminum) (assembled with TiN shafts) w/o springs (front) (2)**
2662 **Big Bore shocks (XX-long) (hard-anodized & PTFE-coated T6 aluminum) (assembled with TiN shafts) w/o springs (rear) (2)**
2669 **Piston head set (2-hole (2)/ 3-hole (2))/ shock mounting bushings & washers (2) (Big Bore Shocks)**
2362 **Rebuild kit, Ultra shocks (for 2 shocks)**
1942 Rod ends (16 long & 4 short)/ hollow ball connectors (18)/ ball screws (2)
2742X Rod ends, short (6)/ hollow balls (6)
2667 **Shock caps, aluminum (Big Bore Shocks) (2)**
1664T **Shock shafts, hardened steel, titanium nitride coated (long) (2)**
2656T **Shock shafts, hardened steel, titanium nitride coated (xx-long) (2)**
1664 Shock shafts, steel, chrome finish (long) (2)
2656 Shock shafts, steel, chrome finish (xx-long) (2)
1765 Silicone diaphragms (4)
1666 Silicone shock oil (30 wt)
2668 **Spring retainers, upper & lower (2)/ spring pre-load spacers: 1mm (4)/ 1.5mm (2)/ 2mm (2)/ 4mm (2)/ 8mm (2) (Big Bore Shocks)**
6863 **Springs, front (progressive, +10% rate, pink) (2)**
6864 **Springs, front (progressive, +20% rate, blue) (2)**
6862 **Springs, front (progressive, -10% rate, green) (2)**
6861 **Springs, front (progressive, -20% rate, orange) (2)**
6857 Springs, front (white) (progressive rate) (2)
6867 **Springs, rear (progressive, +10% rate, pink) (2)**
6868 **Springs, rear (progressive, +20% rate, blue) (2)**
6866 **Springs, rear (progressive, -10% rate, green) (2)**
6865 **Springs, rear (progressive, -20% rate, orange) (2)**
6858 Springs, rear (white) (progressive rate) (2)

Shocks (Ultra Shocks)

3642 Attachment screws, shock (3x12mm shoulder screws) (6)
3765A Body, Ultra Shock(s) (long) (grey) (2)
3766A Body, Ultra Shock(s) (XXL) (grey) (2)
2362 Rebuild kit, Ultra shocks (for 2 shocks)
1942 Rod ends (16 long & 4 short)/ hollow ball connectors (18)/ ball screws (2)
2742X Rod ends, short (6)/ hollow balls (6)
3767 Shock caps (2)/ shock bottoms (2)
3767A **Shock caps, aluminum (blue-anodized) (4) (fits all Ultra Shocks)**
3767G **Shock caps, aluminum (green-anodized) (4) (fits all Ultra Shocks)**
3767P **Shock caps, aluminum (pink-anodized) (4) (fits all Ultra Shocks)**
3767X **Shock caps, aluminum (red-anodized) (4) (fits all Ultra Shocks)**
1664T **Shock shafts, hardened steel, titanium nitride coated (long) (2)**
2656T **Shock shafts, hardened steel, titanium nitride coated (xx-long) (2)**
1664 Shock shafts, steel, chrome finish (long) (2)
2656 Shock shafts, steel, chrome finish (xx-long) (2)
1765 Silicone diaphragms (4)
1666 Silicone shock oil (30 wt)
3769 Spring pre-load spacers: 1mm (4)/ 2mm (2)/ 4mm (2)/ 8mm (2)
3768 Spring retainers, upper & lower (2)/ piston head set (2-hole (2)/ 3-hole (2))
6863 **Springs, front (progressive, +10% rate, pink) (2)**
6864 **Springs, front (progressive, +20% rate, blue) (2)**
6862 **Springs, front (progressive, -10% rate, green) (2)**
6861 **Springs, front (progressive, -20% rate, orange) (2)**
6857 Springs, front (white) (progressive rate) (2)
6867 **Springs, rear (progressive, +10% rate, pink) (2)**
6868 **Springs, rear (progressive, +20% rate, blue) (2)**
6866 **Springs, rear (progressive, -10% rate, green) (2)**
6865 **Springs, rear (progressive, -20% rate, orange) (2)**
6858 Springs, rear (white) (progressive rate) (2)
3760 **Ultra Shocks (black) (long) (complete w/ spring pre-load spacers & springs) (front) (2)**
3762 **Ultra Shocks (black) (xx-long) (complete w/ spring pre-load spacers & springs) (rear) (2)**
3760A Ultra Shocks (grey) (long) (complete w/ spring pre-load spacers & springs) (2)
3762A Ultra Shocks (grey) (xx-long) (complete w/ spring pre-load spacers & springs) (rear) (2)

Slipper Clutch Components

5119A Ball bearings, black rubber sealed (10x15x4mm) (2)
6893G **Bearing adapter, 6061-T6 aluminum (green-anodized) (1)/ 10x15x4mm ball bearing (black rubber sealed) (1) (for slipper shaft)**
6893X **Bearing adapter, 6160-T6 aluminum (blue-anodized) (1)/10x15x4mm ball bearing (blue rubber sealed) (1) (for slipper shaft)**
6814 **Differential kit, center (complete)**
6888 Drive hub, center, rear (1)/ 4x3 GS (1)
6888X **Drive hub, front, hardened steel (1)/ screw pin (1)**
6883 **Gear set, center differential (output gears (2)/ spider gears (2)/ spider gear shaft)**
6884 **Housing, center differential/ x-ring gaskets (2)/ ring gear gasket/ bushings (2)/ 5x10x0.5 TW (2)/ CCS 2.5x8 (4)**
6893 Input shaft (slipper shaft)/ bearing adapter (1)/pin (1)
5352R **Rebuild kit (heavy duty), slipper clutch (steel disc/ aluminum friction pads (3)/ spring (1)/ 2x9.8mm pin/ 5x8mm MW/ 5.0mm NL (1)/ 4.0mm NL (1))**
5352X **Rebuild kit, slipper clutch (steel disc/ friction pads (3)/ spring (2)/ 2x9.8mm pin/ 5x8mm MW/ 5.0mm NL (1)/ 4.0mm NL (1))**
5552X **Rebuild kit, slipper clutch (steel disc/ friction pads (3)/ spring (2)/ pin/ 4.0mm NL (1)/ 5.0mm NL (1))**
2554 Screws, 3x6mm cap-head machine (hex drive) (6)
6878 Slipper clutch, complete
5556 Slipper pressure plate & hub (aluminum alloy)
5351 **Slipper pressure plate and hub (alloy)**

Spur Gears & Pinion Gears

6747 Gear, 11-T pinion (32-p) (steel)/ set screw
6842 **Spur gear, 50-tooth (0.8 metric pitch, compatible with 32-pitch)**
6842R **Spur gear, 50-tooth (0.8 metric pitch, compatible with 32-pitch) (for center differential)**
6843 **Spur gear, 52-tooth (0.8 metric pitch, compatible with 32-pitch)**
6843R **Spur gear, 52-tooth (0.8 metric pitch, compatible with 32-pitch) (for center differential)**
3956 Spur gear, 54-tooth (0.8 metric pitch, compatible with 32-pitch)
3956R **Spur gear, 54-tooth (0.8 metric pitch, compatible with 32-pitch) (requires #6814 center differential)**
3956X **Spur gear, steel, 54-tooth (0.8 metric pitch, compatible with 32-pitch) (requires #6780 center differential)**

Steering Components

1552 Screws, 3x8mm cap-head machine (hex drive) (6)/washers (6)/ wrench
2728 Ball bearings (5x8x2.5mm) (2)

BFGoodrich® Tires Trademarks are used under license from Michelin Group Companies.

SLASH® 4X4 (68054-1)

6845A **Drag link, machined 6061-T6 aluminum (blue-anodized)**
6845G **Drag link, machined 6061-T6 aluminum (green-anodized)**
6845T **Drag link, machined 6061-T6 aluminum (orange-anodized)**
6845R **Drag link, machined 6061-T6 aluminum (red-anodized)**
6846 Linkage, steering (3x20mm turnbuckle) (1)/ rod ends (2)/ hollow balls (2)
2742 Rod ends, long (6)/ hollow ball connectors (6)
6845X Steering bellcranks/ servo saver/ servo saver spring/ servo spring retainer/servo horn, steering
6742X **Toe links (TUBES blue-anodized, 7075-T6 aluminum, stronger than titanium) (87mm) (2)/ rod ends (4)/ aluminum wrench (1)**
6742G **Toe links (TUBES green-anodized, 7075-T6 aluminum, stronger than titanium) (87mm) (2)/ rod ends (4)/ aluminum wrench (1)**
6742R **Toe links (TUBES red-anodized, 7075-T6 aluminum, stronger than titanium) (87mm) (2)/ rod ends (4)/ aluminum wrench (1)**
2746 Washers, 3x6mm metal (12)

Suspension Linkage

3641A Camber link set (plastic / non-adjustable) (front & rear) (grey)
3641 **Camber link set (plastic/ non-adjustable) (front & rear) (black)**
3643X **Camber links, front (TUBES blue-anodized, 7075-T6 aluminum, stronger than titanium) (83mm) (2)/ rod ends (4)/ aluminum wrench (1) (#2579 3x15 BCS (4) required for installation)**
3643G **Camber links, front (TUBES green-anodized, 7075-T6 aluminum, stronger than titanium) (83mm) (2)/ rod ends (4)/ aluminum wrench (1) (#2579 3x15 BCS (4) required for installation)**
3643R **Camber links, front (TUBES red-anodized, 7075-T6 aluminum, stronger than titanium) (83mm) (2)/ rod ends (4)/ aluminum wrench (1) (#2579 3x15 BCS (4) required for installation)**
3644X **Camber links, rear (TUBES blue-anodized, 7075-T6 aluminum, stronger than titanium) (73mm) (2)/ rod ends (4)/ aluminum wrench (1) (#2579 3x15 BCS (4) required for installation)**
3644G **Camber links, rear (TUBES green-anodized 7075-T6 aluminum, stronger than titanium) (73mm) (2)/ rod ends (4)/ aluminum wrench (1) (#2579 3x15 BCS (4) required for installation)**
3644R **Camber links, rear (TUBES red-anodized, 7075-T6 aluminum, stronger than titanium) (73mm) (2)/ rod ends (4)/ aluminum wrench (1) (#2579 3x15 BCS (4) required for installation)**
5525 Rod ends (12)/ hollow balls (12)
3739 Screw pin set (Rustler®/ Bandit/ Stampede®)
6834 Suspension pin set, complete (front and rear)
2537 **Threaded rods (20/25/44mm 1 ea.)/ (1) 12mm set screw**
3644 **Turnbuckles, camber link, 39mm (69mm center to center) (assembled with rod ends and hollow balls) (1 left, 1 right) (fits front & rear on Slash)**
3643 **Turnbuckles, camber link, 49mm (82mm center to center) (assembled with rod ends and hollow balls) (1 left, 1 right)**
5539 **Turnbuckles, camber links, 58mm (assembled with rod ends and hollow balls) (2)**

Team Traxxas Items

2514 **Decal sheet, racing sponsors**
6160X **DVD, Maxx® Power! Full Throttle Action (sleeve)**
9950 **Official Team Traxxas® racing decal set (flag logo/ 6-color)**
9909 **Traxxas® racing banner, red & black (3x7 feet)**

Tires & Wheels

5116 Ball bearings, blue rubber sealed (5x11x4mm) (2)
5854 **Hub retainer, 17mm hubs, M4 X 0.7 (4) (use with #5853X, #6856X, #6469)**
3647 Nuts, 4mm flanged nylon locking (steel, serrated) (8)
1985 PTFE-coated washers, 5x8x0.5mm (20) (use with ball bearings)
1647 Silicone grease
2754 Stub axle pins (4)
5883A **Tire & wheel assy, glued (SCT Split-Spoke, black, blue beadlock wheels, BFGoodrich® Mud-Terrain™ T/A® KM2 tire, inserts) (2) (4WD f/r, 2WD rear)**
5880X **Tires & wheels, assembled, glued (SCT satin chrome, beadlock style wheels, Kumho tires, foam inserts) (2) (4WD front/rear, 2WD rear only)**
5887R **Tires & wheels, assembled, glued (S1 compound) (SCT chrome wheels, red beadlock style, dual profile (2.2" outer, 3.0" inner), SCT off-road racing tires, foam inserts) (2) (4WD f/r, 2WD rear) (TSM rated)**
5889R **Tires & wheels, assembled, glued (S1 compound) (SCT Split-Spoke black, satin chrome beadlock style wheel, dual profile (2.2" outer, 3.0" inner), SCT off-road racing tires, foam inserts) (2) (4WD f/r, 2WD rear) (TSM rated)**
6891R **Tires & wheels, assembled, glued (S1 compound) (SCT Split-Spoke chrome, red beadlock style wheels, dual profile (2.2" outer, 3.0" inner), SCT off-road racing tires, foam inserts) (2) (4WD f/r, 2WD rear) (TSM rated)**
6892R **Tires & wheels, assembled, glued (S1 compound) (SCT Split-Spoke satin chrome, black beadlock style wheels, dual profile (2.2" outer, 3.0" inner), SCT off-road racing tires, foam inserts) (2) (4WD f/r, 2WD rear) (TSM rated)**
5863R **Tires & wheels, assembled, glued (S1 compound) (SCT, black, orange beadlock wheels, dual profile (2.2" outer, 3.0" inner), SCT off-road racing tires, foam inserts) (2) (4WD f/r, 2WD rear) (TSM® rated)**
6873X **Tires & wheels, assembled, glued (S1 ultra-soft off-road racing compound) (SCT Split-Spoke satin chrome, black beadlock style wheels, BFG Mud-Terrain tires, foam inserts) (2) (4WD front/rear, 2WD rear only)**
6874R **Tires & wheels, assembled, glued (S1 ultra-soft off-road racing compound) (SCT Split-Spoke satin chrome, black beadlock style wheels, Kumho tires, foam inserts) (2) (4WD front/rear, 2WD rear only)**
6873R **Tires & wheels, assembled, glued (S1 ultra-soft, off-road racing compound) (SCT Split-Spoke chrome, red beadlock style wheels, BFGoodrich® Mud-Terrain™ T/A® KM2 tires, foam inserts) (2) (4WD f/r, 2WD rear)**
5863 **Tires & wheels, assembled, glued (SCT black, orange beadlock wheels, dual profile (2.2" outer, 3.0" inner), SCT off-road racing tire, foam inserts) (2) (4WD f/r, 2WD rear) (TSM® rated)**
5887 **Tires & wheels, assembled, glued (SCT chrome wheels, red beadlock style, dual profile (2.2" outer, 3.0" inner), SCT off-road racing tires, foam inserts) (2) (4WD f/r, 2WD rear) (TSM rated)**
5867 **Tires & wheels, assembled, glued (SCT chrome, red beadlock style wheels, BFGoodrich® Mud-Terrain™ T/A® KM2 tires, foam inserts) (2)(4WD front/rear, 2WD rear only)**
5873R **Tires & wheels, assembled, glued (SCT satin chrome red beadlock wheels, ultra-soft S1 compound off-road racing tires, inserts) (2) (2WD rear, 4WD f/r)**
5873 **Tires & wheels, assembled, glued (SCT satin chrome, beadlock style wheels, SCT off-road racing tires, foam inserts) (2) (4WD front/rear, 2WD rear only) (TSM rated)**
5878 **Tires & wheels, assembled, glued (SCT satin chrome, black beadlock style wheels, BFGoodrich® Mud-Terrain™ T/A® KM2 tires, foam inserts) (2)(4WD front/rear, 2WD rear only)**
5873X **Tires & wheels, assembled, glued (SCT satin chrome, black beadlock style wheels, SCT off-road racing tires, foam inserts) (2) (4WD front/rear, 2WD rear only)**
5873A **Tires & wheels, assembled, glued (SCT satin chrome, red-beadlock style wheels, SCT off-road tires, foam inserts) (2) (4WD front/rear, 2WD rear only)**
5889 **Tires & wheels, assembled, glued (SCT Split-Spoke black, satin chrome beadlock style wheel, dual profile (2.2" outer, 3.0" inner), SCT off-road racing tires, foam inserts) (2) (4WD f/r, 2WD rear) (TSM rated)**
6873A **Tires & wheels, assembled, glued (SCT Split-Spoke chrome, red beadlock style wheels, BFGoodrich® Mud-Terrain™ T/A® KM2 tires, foam inserts) (2) (4WD f/r, 2WD rear)**
6891 **Tires & wheels, assembled, glued (SCT Split-Spoke chrome, red beadlock style wheels, dual profile (2.2" outer, 3.0" inner), SCT off-road racing tires, foam inserts) (2) (4WD f/r, 2WD rear) (TSM rated)**
5892G Tires & wheels, assembled, glued (SCT Split-Spoke green wheels, SCT off-road racing tires, foam inserts) (2) (4WD f/r, 2WD rear) (TSM rated)
5892 Tires & wheels, assembled, glued (SCT Split-Spoke orange wheels, SCT off-road racing tires, foam inserts) (2) (4WD f/r, 2WD rear) (TSM rated)
6873 **Tires & wheels, assembled, glued (SCT Split-Spoke satin chrome, black beadlock style wheels, BFGoodrich® Mud-Terrain™ T/A® KM2 tires, foam inserts) (2) (4WD f/r, 2WD rear) (TSM® rated)**
6892 **Tires & wheels, assembled, glued (SCT Split-Spoke satin chrome, black beadlock style wheels, dual profile (2.2" outer, 3.0" inner), SCT off-road racing tires, foam inserts) (2) (4WD f/r, 2WD rear) (TSM rated)**
5883 **Tires & wheels, assembled, glued (SCT Split-Spoke, black, satin chrome beadlock wheels, BFGoodrich® Mud-Terrain™ T/A® KM2 tire, foam inserts) (2) (4WD f/r, 2WD rear)**
6871 **Tires, BFGoodrich® Mud-Terrain T/A® KM2 (dual profile 4.3x1.7-2.2/3.0") (2)/ foam inserts (2)**
6871R **Tires, BFGoodrich® Mud-Terrain T/A® KM2 , ultra-soft (S1 off-road racing compound) (dual profile 4.3x1.7- 2.2/3.0") (2)/ foam inserts (2)**
5871 Tires, off-road racing, SCT dual profile 4.3x1.7- 2.2/3.0" (2)/ foam inserts (2)
5871R **Tires, ultra-soft, S1 compound for off-road racing, SCT dual profile 4.3x1.7- 2.2/3.0" (2)/ foam inserts (2)**
1654 Wheel hubs, hex (rear) (2)/ stub axle pins (2)
1654X **Wheel hubs, hex (blue-anodized, lightweight aluminum) (2)/ axle pins(4)**

BFGoodrich® Tires Trademarks are used under license from Michelin Group Companies.

6856X	Wheel hubs, splined, 17mm, short (4)/ wheel nuts, splined, 17mm (4) (blue-anodized)/ hub retainer M4 X 0.7 (4)/ axle pin (4)/ wrench, 5mm
5353	Wheel nuts, splined, 17mm (blue-anodized) (4)
5480X	Wheel wrench, splined, 17mm
5868X	Wheels, SCT black, orange beadlock style, dual profile (2.2" outer, 3.0" inner) (4WD f/r, 2WD rear) (2)
5868	Wheels, SCT chrome, red beadlock style, dual profile (2.2" outer, 3.0" inner) (4WD front/rear, 2WD rear only) (2)
5872	Wheels, SCT satin chrome, beadlock style, dual profile (2.2" outer, 3.0" inner) (4WD front/rear, 2WD rear only)
5872X	Wheels, SCT satin chrome, black beadlock style SCT, dual profile (2.2" outer, 3.0" inner) (4WD front/rear, 2WD rear only) (2)
5872A	Wheels, SCT satin chrome, red beadlock style, dual profile (2.2" outer, 3.0" inner) (4WD front/rear, 2WD rear only) (2)
5884A	Wheels, SCT Split-Spoke, black, blue beadlock style, dual profile (2.2" outer, 3.0" inner) (4WD f/r, 2WD rear) (2)
5884	Wheels, SCT Split-Spoke, black, satin chrome beadlock style, dual profile (2.2" outer, 3.0" inner) (4WD f/r, 2WD rear) (2)
6872X	Wheels, SCT Split-Spoke, chrome, green beadlock style, dual profile (2.2" outer, 3.0" inner) (4WD front/rear, 2WD rear) (2)
6872A	Wheels, SCT Split-Spoke, chrome, red beadlock style, dual profile (2.2" outer, 3.0" inner) (4WD front/rear, 2WD rear) (2)
6872	Wheels, SCT Split-Spoke, satin chrome, black beadlock style, dual profile (2.2" outer, 3.0" inner) (4WD front/rear, 2WD rear only) (2)

Traxxas Tools

3433X	Body reamer (aluminum handle)
3433	Body reamer (plastic handle)
3436	Cap, body reamer
3432	Scissors, curved tip
3431	Scissors, straight tip
8712	Speed Bit Essentials Set, hex and nut driver, 7-piece, includes premium handle (medium), travel pouch, hex drivers (straight: 1.5mm, 2.0mm, 2.5mm) and nut drivers (5.0mm, 5.5mm, 7.0mm, and 8.0mm), 1/4" drive
8721	Speed bit handle, medium (one piece)
8720	Speed bit handle, premium, large (rubber overmold)
8722	Speed bit handle, premium, medium (rubber overmold)
8710	Speed Bit Master Set, hex and nut driver, 13-piece, includes premium handle (medium), travel pouch, hex drivers (straight: 1.5mm, 2.0mm, 2.5mm, 3.0mm), (ball-end: 2.0mm, 2.5mm, 3.0mm), and nut drivers (4.00mm, 4.50mm, 5.00mm, 5.50mm, 7.00mm, 8.00mm),
8711	Speed Bit Master Set, hex driver, 7-piece straight and ball end, includes premium handle (medium), travel pouch, hex drivers (straight: 1.5mm, 2.0mm, 2.5mm, 3.0mm) (ball end: 2.0mm, 2.5mm, 3.0mm), 1/4" drive
8719	Speed Bit Master Set, nut driver, 6-piece, includes premium handle (medium), travel pouch, and nut drivers (4.0mm, 4.5mm, 5.0mm, 5.5mm, 7.0mm, 8.0mm), 1/4" drive
8716	Speed Bit Set, hex driver, 2-piece ball-end (2.0mm, 2.5mm), 1/4" drive
8716X	Speed Bit Set, hex driver, 3-piece ball-end (2.0mm, 2.5mm, 3.0mm), 1/4" drive
8715	Speed Bit Set, hex driver, 3-piece straight (1.5mm, 2.0mm, 2.5mm), 1/4" drive
8715X	Speed Bit Set, hex driver, 4-piece straight (1.5mm, 2.0mm, 2.5mm, 3.0mm), 1/4" drive
3415	Tool set with pouch (includes 1.5mm, 2.0mm, 2.5mm, 3.0mm, 3.5mm, 4mm drivers/ 4mm, 5mm, 5.5mm, 7mm and 8mm nut drivers/ 2mm, 4mm, and 5mm slotted screwdrivers/ #00 Phillips, #0 Phillips, and #1 Phillips screwdrivers/ 4mm and 8mm wrench/ driver handle

Turnbuckles & Threaded Rods

3643X	Camber links, front (TUBES blue-anodized, 7075-T6 aluminum, stronger than titanium) (83mm) (2)/ rod ends (4)/ aluminum wrench (1) (#2579 3x15 BCS (4) required for installation)
3643G	Camber links, front (TUBES green-anodized, 7075-T6 aluminum, stronger than titanium) (83mm) (2)/ rod ends (4)/ aluminum wrench (1) (#2579 3x15 BCS (4) required for installation)
3643R	Camber links, front (TUBES red-anodized, 7075-T6 aluminum, stronger than titanium) (83mm) (2)/ rod ends (4)/ aluminum wrench (1) (#2579 3x15 BCS (4) required for installation)
3644X	Camber links, rear (TUBES blue-anodized, 7075-T6 aluminum, stronger than titanium) (73mm) (2)/ rod ends (4)/ aluminum wrench (1) (#2579 3x15 BCS (4) required for installation)
3644G	Camber links, rear (TUBES green-anodized 7075-T6 aluminum, stronger than titanium) (73mm) (2)/ rod ends (4)/ aluminum wrench (1) (#2579 3x15 BCS (4) required for installation)
3644R	Camber links, rear (TUBES red-anodized, 7075-T6 aluminum, stronger than titanium) (73mm) (2)/ rod ends (4)/ aluminum wrench (1) (#2579 3x15 BCS (4) required for installation)
5525	Rod ends (12)/ hollow balls (12)
2335	Turnbuckles (72mm) (Tie rods or optional rear camber rods) (2)
3644	Turnbuckles, camber link, 39mm (69mm center to center) (assembled with rod ends and hollow balls) (1 left, 1 right) (fits front & rear on Slash)
3643	Turnbuckles, camber link, 49mm (82mm center to center) (assembled with rod ends and hollow balls) (1 left, 1 right)
5539	Turnbuckles, camber links, 58mm (assembled with rod ends and hollow balls) (2)

If you have questions or need technical assistance, call Traxxas at:

1-888-TRAXXAS

(1-888-872-9927) (U.S. residents only)

For orders, calls outside the U.S., and other information, call 972-549-3000, or fax to 972-549-3011 e-mail Traxxas at support@Traxxas.com

TRAXXAS.com

BFGoodrich® Tires Trademarks are used under license from Michelin Group Companies.

SLASH 4X4 ULTIMATE

MODEL 68077-4/6804R

1/10 SCALE 4WD BRUSHLESS
PRO SHORT COURSE RACE TRUCK



60+ mph*

TRAXXAS SCT TIRES, 2.2", S1 COMPOUND, PRE-GLUED WITH FOAM INSERTS

VELINEON BRUSHLESS POWER SYSTEM

TQi 2.4GHz TRANSMITTER WITH TRAXXAS LINK WIRELESS MODULE

SLASH 4X4 PLATINUM EDITION

THE DEFINITION OF ULTIMATE PERFORMANCE

The next-generation Slash 4X4 Ultimate unleashes Ready-To-Race® performance at the highest level. 60+mph speed and fast charging keeps track time up and lap times down. The all-new low-CG (center of gravity) chassis provides superior handling and maximum corner speed. Rough-track control is enhanced by new high-volume, hard-anodized GTR shocks with PTFE-coated bores that provide smooth suspension action and consistent damping, lap after lap. Slash 4X4 Ultimate's low-CG design and state-of-the-art suspension combine to deliver lightning-fast steering, composed handling, and precision control that set the standard for short-course performance. The TQi 2.4GHz Radio System with wireless module and Slash 4X4 Ultimate's factory-installed telemetry sensors enable real-time data capture for tuning ease and versatility. To truly make this the Ultimate Slash 4X4, the specs are completed with nearly every factory option available, from aluminum suspension components to a sealed, silicone-filled differential. Simply put, it's the best of the best.

*With 3S LiPo battery (sold separately) and optional gearing

SLASH 4x4 ULTIMATE

Front Assembly

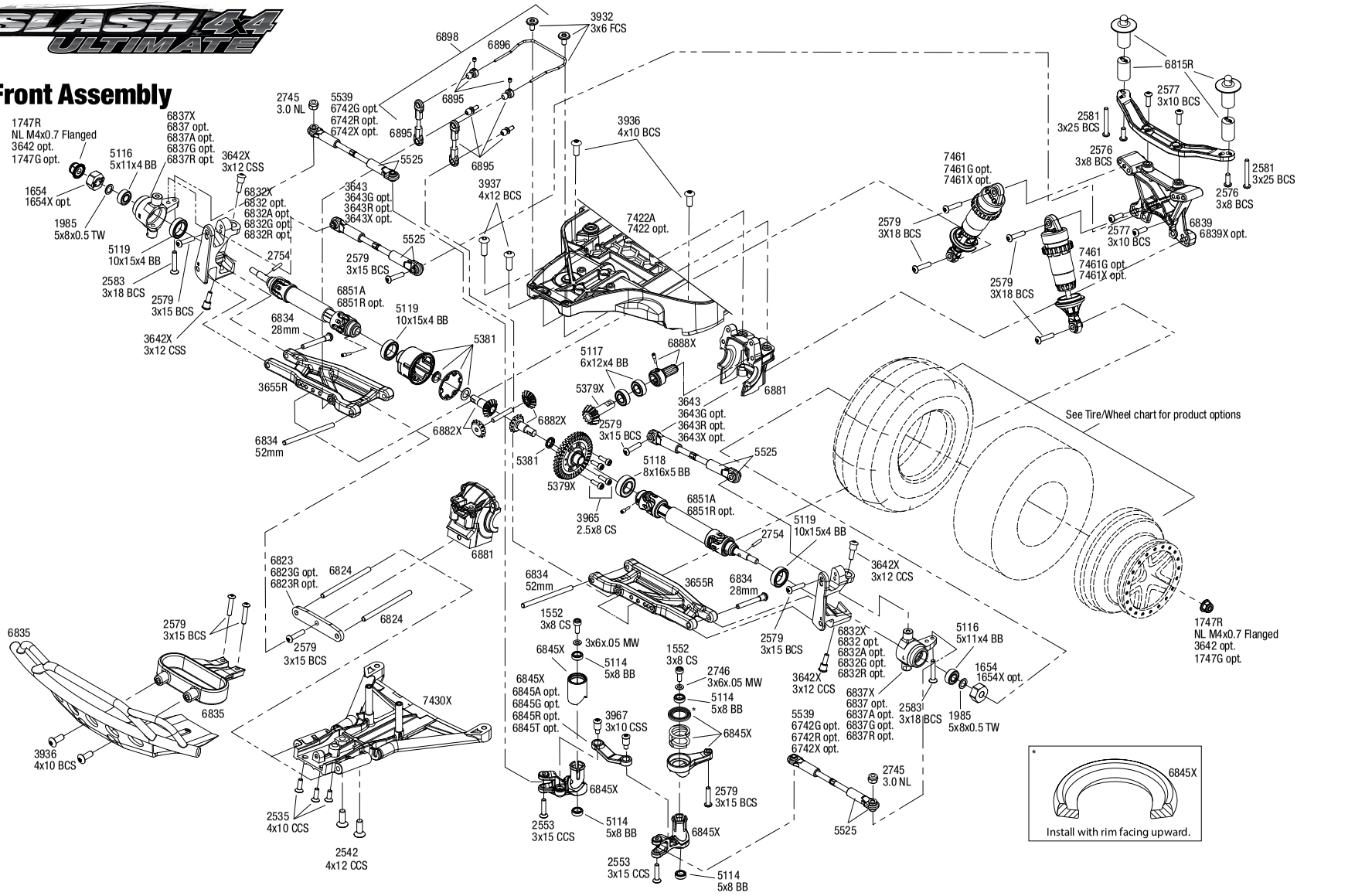

REV 200914-R09

TRAXXAS

See Parts List for a complete listing of optional accessories.

Specifications on this page are subject to change without notice. Every attempt has been made to ensure the accuracy of this drawing; however, Traxxas cannot be held responsible for typographical or other errors.

SLASH® ULTIMATE 68077-4 6804R)

EXPLODED VIEWS

Chassis Assembly

See Parts List for a complete listing of optional accessories.

Specifications on this page are subject to change without notice. Every attempt has been made to ensure the accuracy of this drawing; however, Traxxas cannot be held responsible for typographical or other errors.

REV 200914-R09

SLASH 4x4 ULTIMATE

Rear Assembly

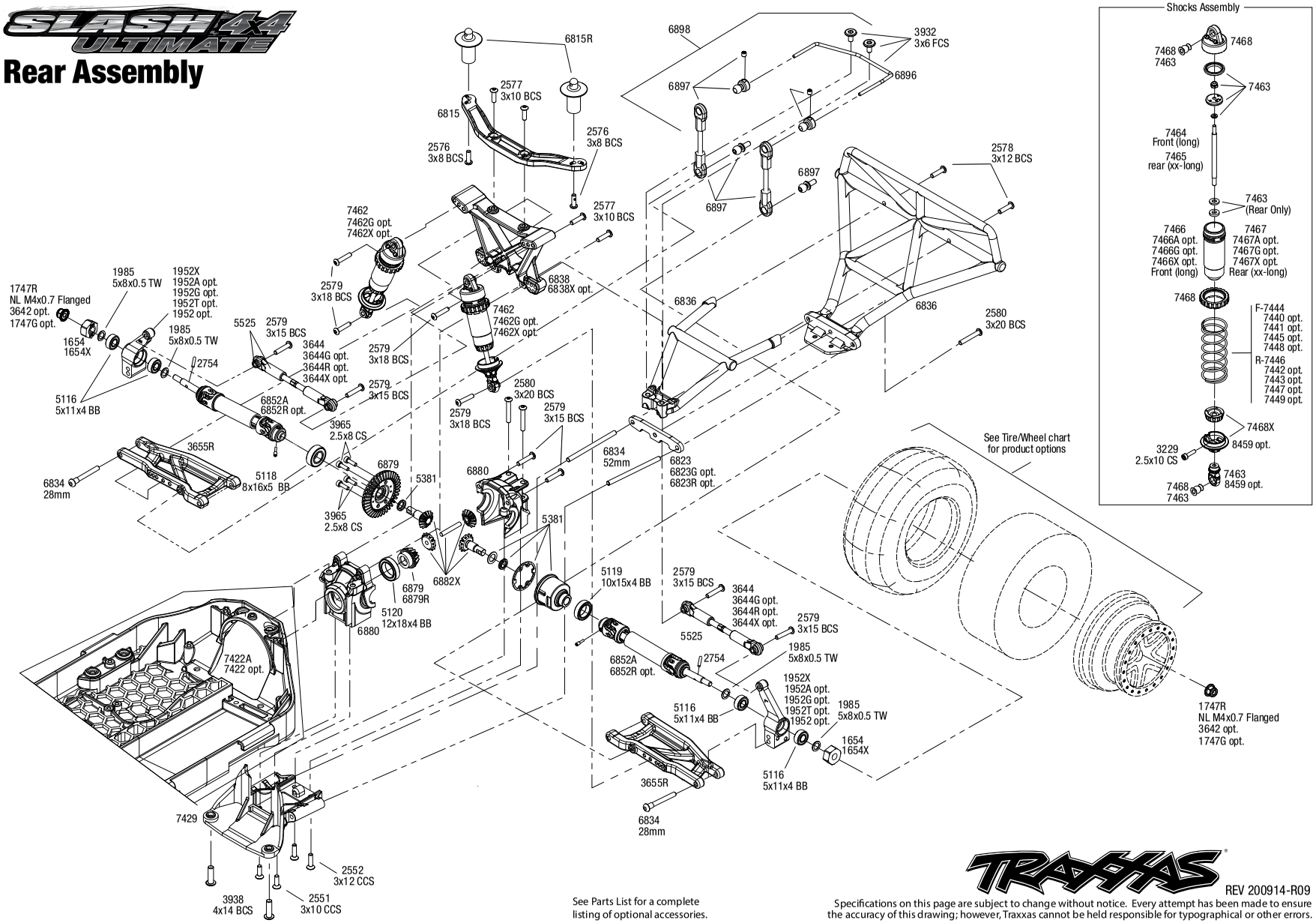

See Parts List for a complete listing of optional accessories.

REV 200914-R09

Specifications on this page are subject to change without notice. Every attempt has been made to ensure the accuracy of this drawing; however, Traxxas cannot be held responsible for typographical or other errors.

SLASH 4x4 ULTIMATE

Transmission Assembly

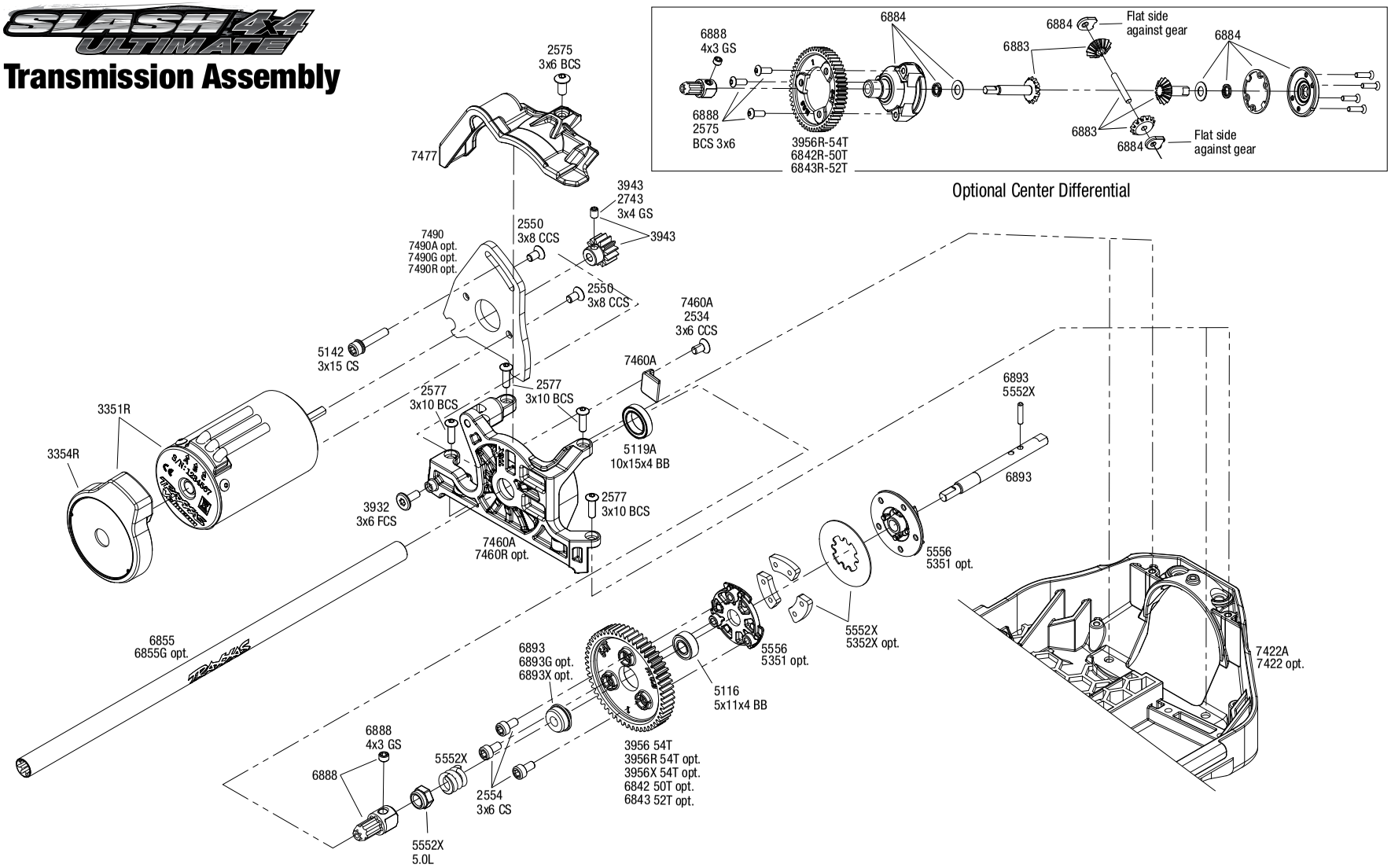

Optional Center Differential

See Parts List for a complete listing of optional accessories.

REV 200914-R09

Specifications on this page are subject to change without notice. Every attempt has been made to ensure the accuracy of this drawing; however, Traxxas cannot be held responsible for typographical or other errors.

Driveshafts

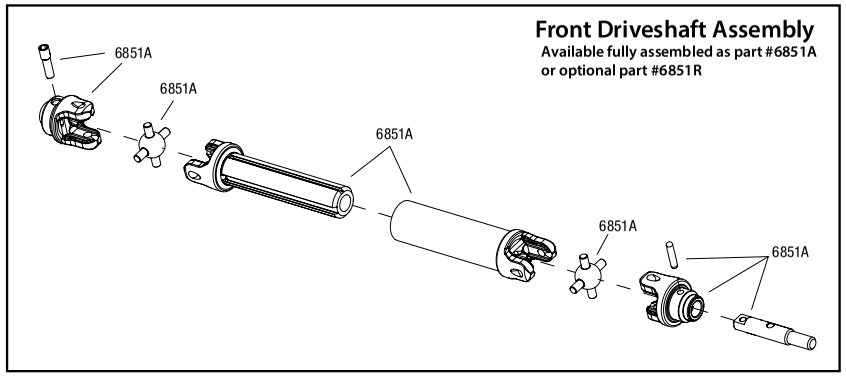

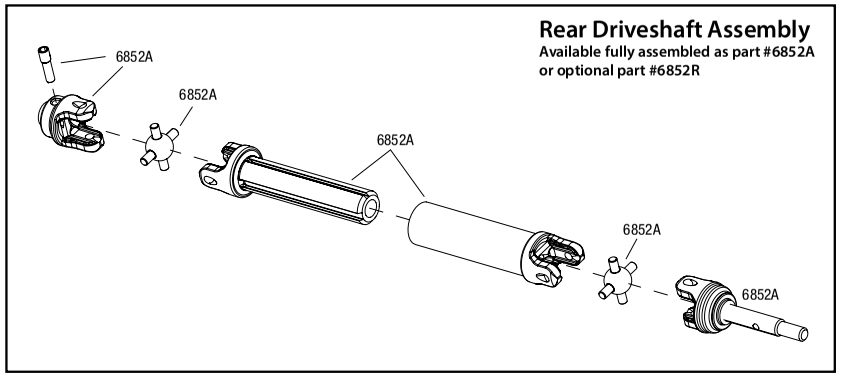

Modular Assembly

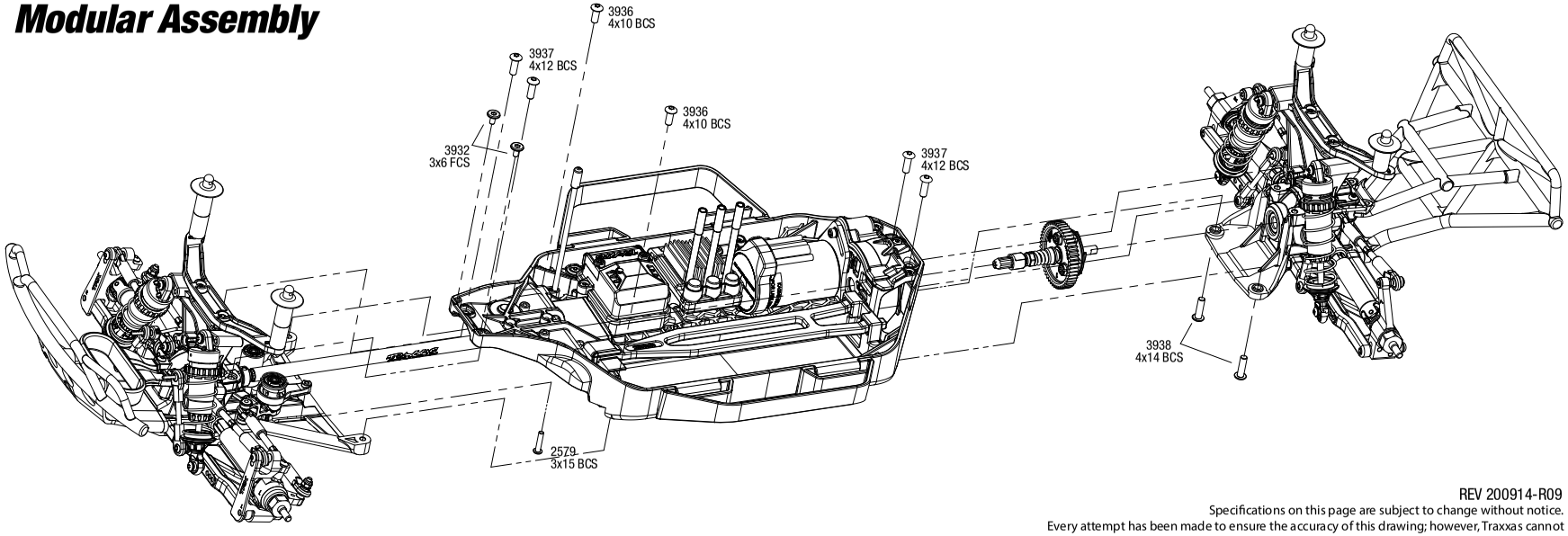

REV 200914-R09

Specifications on this page are subject to change without notice.
Every attempt has been made to ensure the accuracy of this drawing; however, Traxxas cannot
be held responsible for typographical or other errors. See Parts List for a complete listing of optional accessories.

SLASH 4X4 ULTIMATE

Wheel and Tire Chart

TRAXXAS

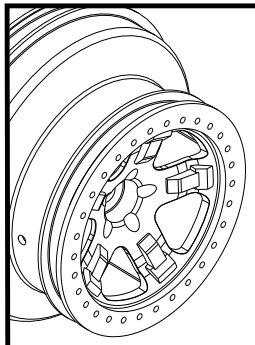

Traxxas SCT Wheels

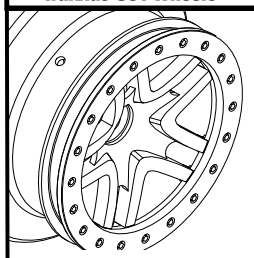

Split Spoke Wheels

Wheels*		Traxxas SCT Tires with Foam Inserts		BFGoodrich® Mud Terrain™ T/A® Tires with Foam Inserts		Kumho Road Venture MT tires with Foam Inserts	
		5871	*S1 Ultra-Soft Racing Compound* 5871R	6871	*S1 Ultra-Soft Racing Compound* 6871R	6870	*S1 Ultra-Soft Racing Compound* 6870R
		Assembled Wheels and Tires		Assembled Wheels and Tires		Assembled Wheels and Tires	
Satin Beadlock/ Satin Wheel - Slash Rear or Slash 4X4 Front/Rear	5872	5873†	-	-	-	-	-
Satin Beadlock/ Satin Wheel - Slash Front	5874	5875	-	-	-	-	-
Red Beadlock/ Satin Wheel - Slash Rear or Slash 4X4 Front/Rear	5872A	5873A	5873R	-	-	-	-
Red Beadlock/ Satin Wheel - Slash Front	5874A	-	-	-	-	-	-
Black Beadlock/ Satin Wheel - Slash Rear or Slash 4X4 Front/Rear	5872X	5873X	-	5878	-	5880X	-
Black Beadlock/ Satin Wheel - Slash Front	5874X	5875X	-	-	-	5881X	-
Red Beadlock/ Chrome Wheel - Slash Rear or Slash 4X4 Front/Rear	5868	-	-	5867	-	-	-
Red Beadlock/ Chrome Wheel - Slash Front	5870	-	-	5869	-	-	-
Green Beadlock/ Chrome Wheel - Slash Front	5866	-	-	5865	-	-	-
Green Beadlock/ Chrome Wheel - Slash Rear or Slash 4X4 Front/Rear	6875	-	-	6876	-	-	-
Orange Beadlock/ Black Wheel - Slash Front	5870X	5864	-	-	-	-	-
Orange Beadlock/ Black Wheel -Slash Rear or Slash 4X4 Front/Rear	5868X	5863†	5863R†	-	-	-	-
Black Beadlock/ Satin Wheel - Slash Rear or Slash 4X4 Front/Rear	6872	-	-	6873†	6873X	6874	6874R
Black Beadlock/ Satin Wheel - Slash Front	5876	-	-	5877	-	5882	5882R
Red Beadlock/ Chrome Wheel - Slash Rear or Slash 4X4 Front/Rear	6872A	-	-	6873A	6873R	-	-
Red Beadlock/ Chrome Wheel - Slash Front	5876A	-	-	5877A	5877R	-	-
Green Beadlock/ Chrome Wheel - Slash Rear or Slash 4X4 Front/Rear Front	6872X	-	-	-	-	-	-
Satin Beadlock/ Black Wheel - Slash Front	5886	-	-	5885	-	-	-
Satin Beadlock/ Black Wheel - Slash Rear or Slash 4X4 Front/Rear	5884	-	-	5883	-	-	-
Blue Beadlock/ Black Wheel - Slash Front	5886A	-	-	5885A	-	-	-
Blue Beadlock/ Black Wheel - Slash Rear or Slash 4X4 Front/Rear	5884A	-	-	5883A	-	-	-

* Wheels and/or tires sold in pairs
†TSM rated

See Parts List for a complete listing of optional accessories.

BFGoodrich® Tires Trademarks are used under license from Michelin Group Companies.

REV 200914-R09

Specifications on this page are subject to change without notice. Every attempt has been made to ensure the accuracy of this drawing; however, Traxxas cannot be held responsible for typographical or other errors.

PARTS SHOWN IN BOLD ARE OPTIONAL ACCESSORIES.

Part categories and individual part listings are arranged alphabetically.

Bearings & Bushings

4607 **Ball bearings (5x11x4mm) (8)**
4612 **Ball bearings (10x15x4mm) (2)**
2728 **Ball bearings (5x8x2.5mm) (2)**
5119A Ball bearings, black rubber sealed (10x15x4mm) (2)
5119 Ball bearings, blue rubber sealed (10x15x4mm) (2)
5120 Ball bearings, blue rubber sealed (12x18x4mm) (2)
5116 Ball bearings, blue rubber sealed (5x11x4mm) (2)
5114 Ball bearings, blue rubber sealed (5x8x2.5mm) (2)
5117 Ball bearings, blue rubber sealed (6x12x4mm) (2)
5118 Ball bearings, blue rubber sealed (8x16x5mm) (2)
1985 PTFE-coated washers, 5x8x0.5mm (20) (use with ball bearings)

Body & Accessories

1926 Antenna caps, vinyl (2)/ antenna spool
1726 **Antenna, tube (1)/ vinyl antenna cap (1)/ wire retainer (1)**
1726A Antenna, tube, black (1)/ vinyl antenna cap (1)/ wire retainer (1)
3935 Body clip (mounting clip), angled, 90-degrees (10)
3935A **Body clip (mounting clip), angled, 90-degrees (black) (10)**
3934 Body clips, heavy duty (12)
6815R Body mount (1)/ body mount post (2)/ body post extensions (2) (front or rear)
1815 Body washers (8)
6716 **Body washers, foam, 2mm (2)/ 3mm (2)/ 4mm (4)**
6811 **Body, Slash 4X4 (clear, requires painting)/ window masks/ decal sheet**
6844X Body, Slash 4X4, green and blue (painted, decals applied)
5849 **Body, Slash 4X4, Hawaiian graphics (painted, decals applied)**
6811R **Body, Slash 4X4, heavy duty (clear, untrimmed, requires painting)/ window masks/ decal sheet**
5824 **Body, Slash 4X4, Keegan Kincaid (painted, decals applied)**
5850 **Body, Slash 4X4, orange (painted, decals applied)**
6844 Body, Slash 4X4, orange and blue (painted, decals applied)
5812 **Body, Slash 4X4, ProGraphix® (Graphics are printed, requires paint & final color application)/ decal sheet**
5824R **Body, Slash 4X4, red (painted, decals applied)**
5848 **Body, Slash 4X4, Rock n' Roll (painted, decals applied)**
6849 **Body, Slash 4X4/Slash, Fox Edition (painted, decals applied)**
2514 **Decal sheet, racing sponsors**
6813 Decal sheet, Slash 4X4
9950 **Official Team Traxxas® racing decal set (flag logo/ 6-color)**

Center Driveline

5119A Ball bearings, black rubber sealed (10x15x4mm) (2)
5119 Ball bearings, blue rubber sealed (10x15x4mm) (2)
5120 Ball bearings, blue rubber sealed (12x18x4mm) (2)
5116 Ball bearings, blue rubber sealed (5x11x4mm) (2)
5117 Ball bearings, blue rubber sealed (6x12x4mm) (2)
6893G **Bearing adapter, 6061-T6 aluminum (green-anodized) (1)/ 10x15x4mm ball bearing (black rubber sealed) (1) (for slipper shaft)**
6893X **Bearing adapter, 6160-T6 aluminum (blue-anodized) (1)/10x15x4mm ball bearing (blue rubber sealed) (1) (for slipper shaft)**
7477 Cover, gear/ wire retainer
6814 **Differential kit, center (complete)**
6888 Drive hub, center, rear (1)/ 4x3 GS (1)
6888X Drive hub, front, hardened steel (1)/ screw pin (1)
6883 **Gear set, center differential (output gears (2)/ spider gears (2)/ spider gear shaft)**
5148 Grease, white lithium
6884 **Housing, center differential/ x-ring gaskets (2)/ ring gear gasket/ bushings (2)/ 5x10x0.5 TW (2)/ CCS 2.5x8 (4)**
6893 Input shaft (slipper shaft)/ bearing adapter (1)/pin (1)
7460A Motor mount (assembled with 3x6 flat-head machine screw)/ 3.0mm NL (1)
7460R **Motor mount, 6061-T6 aluminum (blue-anodized)**
7490 Plate, motor
7490G **Plate, motor, green**
7490A **Plate, motor, orange**
7490R **Plate, motor, red**
5352R **Rebuild kit (heavy duty), slipper clutch (steel disc/ aluminum friction pads (3)/ spring (1)/ 2x9.8mm pin/ 5x8mm MW/ 5.0mm NL (1)/ 4.0mm NL (1))**
5352X **Rebuild kit, slipper clutch (steel disc/ friction pads (3)/ spring (2)/ 2x9.8mm pin/ 5x8mm MW/ 5.0mm NL (1)/ 4.0mm NL (1))**
5552X Rebuild kit, slipper clutch (steel disc/ friction pads (3)/ spring (2)/ pin/ 4.0mm NL (1)/ 5.0mm NL (1))
2575 Screws, 3x6mm button-head machine (hex drive) (6)
2554 Screws, 3x6mm cap-head machine (hex drive) (6)
3932 Screws, 3x6mm flat-head machine (hex drive) (6)
1647 Silicone grease
6878 Slipper clutch, complete
5556 Slipper pressure plate & hub (aluminum alloy)
5351 **Slipper pressure plate and hub (alloy)**

Chassis & Attachments

7426 Battery hold-down (1)/ hold-down retainer, front & rear (1 each)
7426X Battery hold-downs, tall (2) (allows for installation of taller, multi-cell batteries)
6815R Body mount (1)/ body mount post (2)/ body post extensions (2) (front or rear)
7424 Box, receiver (sealed)/ foam pads/ 2.5x12mm CS (2)/ 3x6mm CS (2)/ 3x12mm BCS (2)
6835 Bumper, front/ bumper mount, front (black)
6836 Bumper, rear/ bumper mount, rear (black)
7422 **Chassis**
6730X **Chassis brace kit, blue (fits Rustler® 4X4 or Slash 4X4 models equipped with Low-CG chassis)**
6730G **Chassis brace kit, green (fits Rustler® 4X4 or Slash 4X4 models equipped with Low-CG chassis)**
6730A **Chassis brace kit, orange (fits Rustler® 4X4 or Slash 4X4 models equipped with Low-CG chassis)**
6730R **Chassis brace kit, red (fits Rustler® 4X4 or Slash 4X4 models equipped with Low-CG chassis)**
7422A Chassis, charcoal gray
7423 Nerf bars, chassis (2)
7425 Seal kit, receiver box (includes o-ring, seals, and silicone grease)
7437 Skidplate, front

Differential Components

5119 Ball bearings, blue rubber sealed (10x15x4mm) (2)
5117 Ball bearings, blue rubber sealed (6x12x4mm) (2)
5118 Ball bearings, blue rubber sealed (8x16x5mm) (2)
5381 Carrier, differential/ x-ring gaskets (2)/ ring gear gasket/ 6x10x0.5 TW
6780 **Differential kit, center (complete)**
6814 **Differential kit, center (complete)**
5136X **Differential oil kit (1 each: 10K, 30K, 50K weights)**
6783 **Gear set, center differential (output gears (2)/ spider gears (4)/ spider gear shaft (2))**
6882X Gear set, differential (output gears (2)/ spider gears (2)/ spider gear shaft, carrier support)
6781 **Housing, center differential (aluminum)/ x-ring gaskets (2)/ ring gear gasket/ bushings (2)/ 5x10x0.5mm PTFE-coated washers (2)/ 2.5x8 CCS (4)**
6881 Housings, differential, front
6880 Housings, differential, rear
6782 **Output gears, center differential, hardened steel (2)**
5379X Ring gear, differential/ pinion gear, differential
5379R **Ring gear, differential/ pinion gear, differential (machined, spiral cut) (front)**
6879R **Ring gear, differential/ pinion gear, differential (machined, spiral cut) (rear)**
6879 Ring gear, differential/ pinion gear, differential (rear)
3965 Screws, 2.5x8mm cap-head machine (6)
1647 Silicone grease

Driveline Components

5119A Ball bearings, black rubber sealed (10x15x4mm) (2)
5119 Ball bearings, blue rubber sealed (10x15x4mm) (2)
5116 Ball bearings, blue rubber sealed (5x11x4mm) (2)
9059X **Cross pin (2)/ drive pin (2) (repairs 2 axle shafts)**
6758 **Differential output shaft (for steel constant-velocity driveshafts) (2)**
9057X **Differential output shafts, steel-splined constant-velocity (2)**
6828A **Differential output yoke assembly, extreme heavy duty (2) (left or right, front or rear) (assembled with external-splined half shaft)**
6851A Driveshaft assembly, front, extreme heavy duty (1) (left or right) (fully assembled, ready to install)/ screw pin (1)
6852A Driveshaft assembly, rear, extreme heavy duty (1) (left or right) (fully assembled, ready to install)/ screw pin (1)
6855 Driveshaft, center, 6061-T6 aluminum (blue-anodized)
6855G **Driveshaft, center, 6061-T6 aluminum (green-anodized)**
6855R **Driveshaft, center, 6061-T6 aluminum (red-anodized)**

SLASH® ULTIMATE 68077-4 6804R)

6851R	**Driveshafts, front, steel-spline constant-velocity (complete assembly) (2)**
9051X	**Driveshafts, front, steel-spline constant-velocity (complete assembly) (2)**
6852R	**Driveshafts, rear, steel-spline constant-velocity (complete assembly) (2)**
9052X	**Driveshafts, rear, steel-spline constant-velocity (complete assembly) (2)**
9055X	**Half shaft, external splined (steel-spline constant velocity) (1)**
6750	**Half shaft, external splined (steel-spline constant-velocity) (1)**
9056X	**Half shaft, internal splined (steel-spline constant velocity) (1)**
6751	**Half shaft, internal splined (steel-spline constant-velocity) (1)**
6757	**Rebuild kit, steel-splined constant-velocity driveshafts (includes pins, dustboots, lube, and hardware)**
9058X	**Rebuild kit, steel-splined constant-velocity driveshafts (includes pins, lube, and hardware for two axle shafts)**
6854A	**Stub axle assembly, front, outer, extreme heavy duty (1) (left or right) (assembled with internal-splined half shaft)**
6853A	**Stub axle assembly, rear, outer, extreme heavy duty (1) (left or right) (assembled with internal-splined half shaft)**
6754	**Stub axle, front, 5mm (steel-splined constant-velocity driveshaft) (1)**
9054X	**Stub axle, front, steel-splined constant velocity (1)**
6753	**Stub axle, rear, 5mm (steel-splined constant-velocity driveshaft) (1)**
9053X	**Stub axle, rear, steel-splined constant velocity (1)**

Front Suspension & Steering

2728	**Ball bearings (5x8x2.5mm) (2)**
5114	Ball bearings, blue rubber sealed (5x8x2.5mm) (2)
6823	Bulkhead tie bars, front & rear, aluminum (blue-anodized)
6823G	**Bulkhead tie bars, front & rear, aluminum (green-anodized)**
6823R	**Bulkhead tie bars, front & rear, aluminum (red-anodized)**
7430X	Bulkhead, front
3643X	**Camber links, front (TUBES blue-anodized, 7075-T6 aluminum, stronger than titanium) (83mm) (2)/ rod ends (4)/ aluminum wrench (1) (#2579 3x15 BCS (4) required for installation)**
3643G	**Camber links, front (TUBES green-anodized, 7075-T6 aluminum, stronger than titanium) (83mm) (2)/ rod ends (4)/ aluminum wrench (1) (#2579 3x15 BCS (4) required for installation)**
3643R	**Camber links, front (TUBES red-anodized, 7075-T6 aluminum, stronger than titanium) (83mm) (2)/ rod ends (4)/ aluminum wrench (1) (#2579 3x15 BCS (4) required for installation)**
6832X	Caster blocks (c-hubs), 6061-T6 aluminum (blue-anodized), left & right
6832G	**Caster blocks (c-hubs), 6061-T6 aluminum (green-anodized), left & right**
6832A	**Caster blocks (c-hubs), 6061-T6 aluminum (orange-anodized), left & right**
6832R	**Caster blocks (c-hubs), 6061-T6 aluminum (red-anodized), left & right**
6832	**Caster blocks (c-hubs), left & right**
6845A	**Drag link, machined 6061-T6 aluminum (blue-anodized)**
6845G	**Drag link, machined 6061-T6 aluminum (green-anodized)**
6845T	**Drag link, machined 6061-T6 aluminum (orange-anodized)**
6845R	**Drag link, machined 6061-T6 aluminum (red-anodized)**
6895	Linkage, front sway bar (2) (assembled with rod ends, hollow balls and ball studs)
6897	Linkage, rear sway bar (2) (assembled with rod ends, hollow balls and ball studs)
7438	Linkage, steering
3646	Screws, 3x15mm flat-head machine (hex drive) (6)
6839	Shock tower, front
6839X	**Shock tower, front, 7075-T6 aluminum (blue-anodized)**
6845X	Steering bellcranks/ servo saver/ servo saver spring/ servo spring retainer/servo horn, steering
6837X	Steering blocks, 6061-T6 aluminum (blue-anodized), left & right
6837G	**Steering blocks, 6061-T6 aluminum (green-anodized), left & right**
6837A	**Steering blocks, 6061-T6 aluminum (orange-anodized), left & right**
6837R	**Steering blocks, 6061-T6 aluminum (red-anodized), left & right**
6837	**Steering blocks, left & right**
6854A	**Stub axle assembly, front, outer, extreme heavy duty (1) (left or right) (assembled with internal-splined half shaft)**
6754	**Stub axle, front, 5mm (steel-splined constant-velocity driveshaft) (1)**
3655P	**Suspension arms, blue, front/rear (left & right), heavy duty (2)**
3655R	Suspension arms, front/rear (left & right), heavy duty (2)
3655G	**Suspension arms, green, front/rear (left & right), heavy duty (2)**
3655T	**Suspension arms, orange, front/rear (left & right), heavy duty (2)**
3655L	**Suspension arms, red, front/rear (left & right), heavy duty (2)**
3655A	**Suspension arms, white, front/rear (left & right), heavy duty (2)**
6834	Suspension pin set, complete (front and rear)
6898	Sway bar kit (front and rear) (includes front and rear sway bars and adjustable linkage)
6742X	**Toe links (TUBES blue-anodized, 7075-T6 aluminum, stronger than titanium) (87mm) (2)/ rod ends (4)/ aluminum wrench (1)**
6742G	**Toe links (TUBES green-anodized, 7075-T6 aluminum, stronger than titanium) (87mm) (2)/ rod ends (4)/ aluminum wrench (1)**
6742R	**Toe links (TUBES red-anodized, 7075-T6 aluminum, stronger than titanium) (87mm) (2)/ rod ends (4)/ aluminum wrench (1)**
3643	Turnbuckles, camber link, 49mm (82mm center to center) (assembled with rod ends and hollow balls) (1 left, 1 right)
5539	Turnbuckles, camber links, 58mm (assembled with rod ends and hollow balls) (2)
6896	**Wires, sway bar (front & rear, hard & soft) / 3x6 FCS (4)**

Hardware

1926	Antenna caps, vinyl (2)/ antenna spool
1726	**Antenna, tube (1)/ vinyl antenna cap (1)/ wire retainer (1)**
1726A	Antenna, tube, black (1)/ vinyl antenna cap (1)/ wire retainer (1)
1552	Screws, 3x8mm cap-head machine (hex drive) (6)/washers (6)/ wrench
3935	Body clip (mounting clip), angled, 90-degrees (10)
3935A	**Body clip (mounting clip), angled, 90-degrees (black) (10)**
3934	Body clips, heavy duty (12)
1589	Double-sided adhesive tape (25mm x 25mm) (2)
2586	Screws, 3x15mm cap-head machine (hex drive) (6)
2745	Nuts, 3mm nylon locking (12)
3647	Nuts, 4mm flanged nylon locking (steel, serrated) (8)
1747R	Nuts, aluminum, flanged, serrated (4mm) (blue-anodized) (4)
1985	PTFE-coated washers, 5x8x0.5mm (20) (use with ball bearings)
5525	Rod ends (12)/ hollow balls (12)
2742X	Rod ends, short (6)/ hollow balls (6)
3347	Screws, 2.5x5mm button-head machine (hex drive) (6)
3215	Screws, 2.5x6mm cap-head machine (hex drive) (6)
3965	Screws, 2.5x8mm cap-head machine (6)
2577	Screws, 3x10mm button-head machine (hex drive) (6)
2578	Screws, 3x12mm button-head machine (hex drive) (6)
2552	Screws, 3x12mm countersunk machine (6) (hex drive)
2579	Screws, 3x15mm button-head machine (hex drive) (6)
3646	Screws, 3x15mm flat-head machine (hex drive) (6)
2583	Screws, 3x18mm button-head machine (hex drive) (6)
2580	Screws, 3x20mm button-head machine (hex drive) (6)
2591	Screws, 3x23mm button-head machine (hex drive) (6)
2582	Screws, 3x30mm button-head machine (hex drive) (6)
2592	Screws, 3x40mm button-head machine (hex drive) (6)
2575	Screws, 3x6mm button-head machine (hex drive) (6)
2534	Screws, 3x6mm countersunk machine (6) (hex drive)
3932	Screws, 3x6mm flat-head machine (hex drive) (6)
2576	Screws, 3x8mm button-head machine (hex drive) (6)
3931	Screws, 3x8mm flat-head machine (hex drive) (6)
3936	Screws, 4x10mm button-head machine (hex drive) (6)
3937	Screws, 4x12mm button-head machine (hex drive) (6)
2542	Screws, 4x12mm countersunk machine (hex drive) (6)
3938	Screws, 4x14mm button-head machine (hex drive) (6)
2546	Screws, 4x15mm countersunk machine (hex drive) (6)
2743	Set (grub) screws, 3mm hardened (12)
3642X	Shoulder screws, Ultra Shocks (3x12 hex drive) (6)
2754	Stub axle pins (4)
2748X	Tool Set (1.5mm &2.5mm allens/ 4-way lug, 8mm &4mm wrench & U-joint wrenches)
2746	Washers, 3x6mm metal (12)

Motors & Electronics

1726	**Antenna, tube (1)/ vinyl antenna cap (1)/ wire retainer (1)**
1726A	Antenna, tube, black (1)/ vinyl antenna cap (1)/ wire retainer (1)
2260	**BEC assembly (complete)**
3340	**Cooling fan, Velineon® VXL-3s ESC**
2072X	**Gear set, metal (for 2070, 2075 servos)**
2252	**Gear set, metal (for 2250, 2255 servos)**
2072R	Gear set, metal, high speed (for 2070, 2075 servos)
3354R	Motor cover, endbell (Velineon® 3500)
7460A	Motor mount (assembled with 3x6 flat-head machine screw)/ 3.0mm NL (1)
7460R	**Motor mount, 6061-T6 aluminum (blue-anodized)**
3351R	Motor, Velineon® 3500, brushless (assembled with 12-gauge wire and gold-plated bullet connectors)
7490	Plate, motor
7490G	**Plate, motor, green**
7490A	**Plate, motor, orange**
7490R	**Plate, motor, red**
3352R	Rebuild kit, Velineon® 3500 (includes plastic endbell, 5x11x4mm ball bearings (2), 2.5x5mm BCS (with threadlock) (4), rear bushing)
3347	Screws, 2.5x5mm button-head machine (hex drive) (6)

BFGoodrich® Tires Trademarks are used under license from Michelin Group Companies.

3932 Screws, 3x6mm flat-head machine (hex drive) (6)
2254 Servo case, aluminum (blue-anodized) (middle) (for 2250 servo)
2253 Servo case, aluminum (red-anodized) (middle) (for 2255 servo)
2251 Servo case, plastic (top, middle, bottom)/ gaskets/ hardware (for 2250, 2255 servos)
2074 Servo case/gaskets (for 2056 and 2075 waterproof servos)
2075R Servo, digital high-speed, metal gear (ball bearing), waterproof
2250 Servo, digital high-torque 330 coreless, metal gear (ball bearing), waterproof
2255 Servo, digital high-torque 400 brushless, metal gear (ball bearing), waterproof
2075X Servo, digital high-torque, metal gear (ball bearing), waterproof
3350R Velineon® VXL-3s Brushless Power System, waterproof (includes VXL-3s waterproof ESC, Velineon 3500 motor, and speed control mounting plate (part #3725R))
3355R Velineon® VXL-3s Electronic Speed Control, waterproof (brushless) (fwd/rev/brake)

Radio System, Batteries & Chargers

2872X 5000mAh 11.1v 3-Cell 25C LiPo Battery
2857X 6400mAh 11.1v 3-Cell 25C LiPo Battery
2869X 7600mAh 7.4v 2-Cell 25C LiPo Battery
2976 AC to DC converter, 40W
2938X Adapter, Traxxas® iD® LiPo battery (adapts Traxxas iD batteries to separate balance ports)
2943 Battery charge indicators (green (4), blue (4), grey (4))
6548 Battery door, transmitter (replacement for #6516, 6517, 6528, 6529, 6530 transmitters)
2914 Battery, Power Cell AA Alkaline (4)
2923X Battery, Power Cell, 3000mAh (NiMH, 7-C flat, 8.4V)
2926X Battery, Power Cell, 3000mAh (NiMH, 7-C hump, 8.4V)
2940X Battery, Series 3 Power Cell, 3300mAh (NiMH, 7-C flat, 8.4V)
2941X Battery, Series 3 Power Cell, 3300mAh (NiMH, 7-C hump, 8.4V)
2950X Battery, Series 4 Power Cell, 4200mAh (NiMH, 7-C flat, 8.4V)
2951X Battery, Series 4 Power Cell, 4200mAh (NiMH, 7-C hump, 8.4V)
2960X Battery, Series 5 Power Cell, 5000mAh (NiMH, 7-C flat, 8.4V)
2961X Battery, Series 5 Power Cell, 5000mAh (NiMH, 7-C hump, 8.4V)
2983 Battery/charger completer pack (includes #2969 2-amp NiMH peak detecting AC charger (1), #2923X 3000mAh 8.4V 7-cell NiMH battery (1))
2992 Battery/charger completer pack (includes #2970 iD® charger (1), #2843X 5800mAh 7.4V 2-cell 25C LiPo battery (1))
2260 BEC assembly (complete)
2975 Charger, DC, 4 amp (6 - 7 cell, 7.2 - 8.4 volt, NiMH)
2972 Charger, EZ-Peak® Dual, 100W, NiMH/LiPo with iD® Auto Battery Identification
2973 Charger, EZ-Peak® Live Dual, 200W, NiMH/LiPo with iD® Auto Battery Identification
2971 Charger, EZ-Peak® Live, 100W, NiMH/LiPo with iD® Auto Battery Identification
2970 Charger, EZ-Peak® Plus, 4 amp, NiMH/LiPo with iD® Auto Battery Identification
6525 Communication link, telemetry expander
2978 Fuse, charger, 5A (2) (for #2974, 2975, 2977)
2072X Gear set, metal (for 2070, 2075 servos)
2252 Gear set, metal (for 2250, 2255 servos)
2072R Gear set, metal, high speed (for 2070, 2075 servos)
2968X LiPo cell voltage checker/balancer (includes #2938X adapter for Traxxas® iD® batteries)
2968 LiPo cell voltage checker/balancer (requires #2938X adapter for Traxxas® iD® batteries)
6555 Mount, telemetry expander (fits Slash 4X4, Stampede® 4X4, Rally, Jato®)
6535 Mount, temperature sensor (electric motors)/ wire tie/ thermal pad
6533 Receiver, micro, TQi 2.4GHz with telemetry & TSM (5-channel)
3932 Screws, 3x6mm flat-head machine (hex drive) (6)
6552 Seal kit, expander box (includes o-ring, seals, and silicone grease)
6526 Sensor, auto-detectable, temperature
6527 Sensor, auto-detectable, voltage
6520 Sensor, RPM (long)/ 3x4mm BCS (2)/ 3x4 GS (1)
6521 Sensor, temperature and voltage (long)
2254 Servo case, aluminum (blue-anodized) (middle) (for 2250 servo)
2253 Servo case, aluminum (red-anodized) (middle) (for 2255 servo)
2251 Servo case, plastic (top, middle, bottom)/ gaskets/ hardware (for 2250, 2255 servos)
2074 Servo case/gaskets (for 2056 and 2075 waterproof servos)
2075R Servo, digital high-speed, metal gear (ball bearing), waterproof
2250 Servo, digital high-torque 330 coreless, metal gear (ball bearing), waterproof
2255 Servo, digital high-torque 400 brushless, metal gear (ball bearing), waterproof
2075X Servo, digital high-torque, metal gear (ball bearing), waterproof
6544 Spacers (4)/ grip pads (3)/connector dust cover (1) (for TQi docking base)
6553X Telemetry expander 2.0 and GPS module 2.0, TQi radio system
6550X Telemetry expander 2.0, TQi radio system (for use only with #6551X GPS module)
6551X Telemetry GPS module 2.0, TQi radio system (for use only with #6550X telemetry expander)
6539 Telemetry trigger magnet holder, center differential/ magnet, 5x2mm (1)/ 3x8mm BCS (3)
6538 Telemetry trigger magnet holders, spur gear/ magnet, 5x2mm (1)/ 3x8mm CCS (3)/ 3x10mm CCS (3)
6540 Telemetry trigger magnet, 5X2mm (1)
6509R TQi 2.4 GHz High Output radio system, 2-channel, Traxxas Link™ enabled, TSM (2-ch transmitter, 5-ch micro receiver)
6507R TQi 2.4 GHz High Output radio system, 4-channel with Traxxas Link™ Wireless Module, TSM (4-ch transmitter, 5-ch micro receiver)
6528 Transmitter, TQi Traxxas Link™ enabled, 2.4GHz high output, 2-channel (transmitter only)
6529 Transmitter, TQi Traxxas Link™ enabled, 2.4GHz high output, 3-channel (transmitter only)
6530 Transmitter, TQi Traxxas Link™ enabled, 2.4GHz high output, 4-channel (transmitter only)
6511 Traxxas Link™ Wireless Module
3355R Velineon® VXL-3s Electronic Speed Control, waterproof (brushless) (fwd/rev/brake)

Ready-To-Race Model

68077-4 Slash 4X4 Ultimate: 1/10 Scale 4WD Electric Short Course Truck with TQi Radio System, Traxxas Link™ Wireless Module, & Traxxas Stability Managment (TSM)®

Rear Suspension

6823 Bulkhead tie bars, front & rear, aluminum (blue-anodized)
6823G Bulkhead tie bars, front & rear, aluminum (green-anodized)
6823R Bulkhead tie bars, front & rear, aluminum (red-anodized)
7429 Bulkhead, rear
3644X Camber links, rear (TUBES blue-anodized, 7075-T6 aluminum, stronger than titanium) (73mm) (2)/ rod ends (4)/ aluminum wrench (1) (#2579 3x15 BCS (4) required for installation)
3644G Camber links, rear (TUBES green-anodized 7075-T6 aluminum, stronger than titanium) (73mm) (2)/ rod ends (4)/ aluminum wrench (1) (#2579 3x15 BCS (4) required for installation)
3644R Camber links, rear (TUBES red-anodized, 7075-T6 aluminum, stronger than titanium) (73mm) (2)/ rod ends (4)/ aluminum wrench (1) (#2579 3x15 BCS (4) required for installation)
1952X Carriers, stub axle (blue-anodized 6061-T6 aluminum) (rear) (2)
1952G Carriers, stub axle (green-anodized 6061-T6 aluminum) (rear) (2)
1952T Carriers, stub axle (orange-anodized 6061-T6 aluminum) (rear) (2)
1952 Carriers, stub axle (rear) (2)
1952A Carriers, stub axle (red-anodized 6061-T6 aluminum) (rear) (2)
6895 Linkage, front sway bar (2) (assembled with rod ends, hollow balls and ball studs)
6897 Linkage, rear sway bar (2) (assembled with rod ends, hollow balls and ball studs)
6838 Shock tower, rear
6838X Shock tower, rear, 7075-T6 aluminum (blue-anodized)
6853A Stub axle assembly, rear, outer, extreme heavy duty (1) (left or right) (assembled with internal-splined half shaft)
3655P Suspension arms, blue, front/rear (left & right), heavy duty (2)
3655R Suspension arms, front/rear (left & right), heavy duty (2)
3655G Suspension arms, green, front/rear (left & right), heavy duty (2)
3655T Suspension arms, orange, front/rear (left & right), heavy duty (2)
3655L Suspension arms, red, front/rear (left & right), heavy duty (2)
3655A Suspension arms, white, front/rear (left & right), heavy duty (2)
6834 Suspension pin set, complete (front and rear)
6898 Sway bar kit (front and rear) (includes front and rear sway bars and adjustable linkage)
3644 Turnbuckles, camber link, 39mm (69mm center to center) (assembled with rod ends and hollow balls) (1 left, 1 right) (fits front & rear on Slash, rear on Slash 4X4)
6896 Wires, sway bar (front & rear, hard & soft) / 3x6 FCS (4)

Shocks (GTR)

7466X Body, GTR long (hard-anodized, PTFE-coated aluminum) (1)
7466 Body, GTR long shock, aluminum (blue-anodized) (PTFE-coated bodies) (1)
7466G Body, GTR long shock, aluminum (green-anodized) (PTFE-coated bodies) (1)
7466A Body, GTR long shock, aluminum (orange-anodized) (PTFE-coated bodies) (1)
7467X Body, GTR xx-long (hard-anodized, PTFE-coated aluminum) (1)

BFGoodrich® Tires Trademarks are used under license from Michelin Group Companies.

SLASH® ULTIMATE 68077-4 6804R)

7467 Body, GTR xx-long shock, aluminum (blue-anodized) (PTFE-coated bodies) (1)
7467G Body, GTR xx-long shock, aluminum (green-anodized) (PTFE-coated bodies) (1)
7467A Body, GTR xx-long shock, aluminum (orange-anodized) (PTFE-coated bodies) (1)
7468X Caps & spring retainers, GTR shock (upper cap (2)/ hollow balls (4)/ bottom cap (2)/ upper retainer (2)/ lower retainer (2))
7468 Caps and spring retainers, GTR long/xx-long shock (upper cap (2)/ hollow balls (4)/ bottom cap (2)/ upper retainer (2)/ lower retainer (2))
5475 Multi-tool (plastic)
5158 Nuts, 2.5mm nylon locking (12)
7463 Rebuild kit, GTR long/xx-long shocks (x-rings, bladders, pistons, piston nuts, shock rod ends, hollow balls) (renews 2 shocks)
5469 Rod ends (GTR shocks) (6)
7464T Shaft, GTR long, TiN-coated (2)
7465T Shaft, GTR xx-long, TiN-coated (2)
7461 Shocks, GTR long blue-anodized, PTFE-coated bodies with TiN shafts (fully assembled, without springs) (2)
7461G Shocks, GTR long green-anodized, PTFE-coated bodies with TiN shafts (fully assembled, without springs) (2)
7461X Shocks, GTR long hard-anodized, PTFE-coated bodies with TiN shafts (assembled) (2) (without springs)
7462 Shocks, GTR xx-long blue-anodized, PTFE-coated bodies with TiN shafts (fully assembled, without springs) (2)
7462G Shocks, GTR xx-long green-anodized, PTFE-coated bodies with TiN shafts (fully assembled, without springs) (2)
7462X Shocks, GTR xx-long hard-anodized, PTFE-coated bodies with TiN shafts (assembled) (2) (without springs)
8459 Spring retainers, lower (captured) (4)/ 2.5x10 CS (4)
7440 Spring, shock, white (GTR long) (0.623 rate orange) (1 pair)
7441 Spring, shock, white (GTR long) (0.653 rate green) (1 pair)
7444 Spring, shock, white (GTR long) (0.767 rate black) (1 pair)
7445 Spring, shock, white (GTR long) (0.810 rate pink) (1 pair)
7448 Spring, shock, white (GTR long) (0.892 rate blue) (1 pair)
7442 Spring, shock, white (GTR xx-long) (0.711 rate orange) (1 pair)
7443 Spring, shock, white (GTR xx-long) (0.762 rate green) (1 pair)
7446 Spring, shock, white (GTR xx-long) (0.874 rate black) (1 pair)
7447 Spring, shock, white (GTR xx-long) (0.884 rate pink) (1 pair)
7449 Spring, shock, white (GTR xx-long) (1.004 rate blue) (1 pair)

Shocks (Pro-level Aluminum)

2664 Big Bore shock cylinder (long) (1)
2666 Big Bore shock cylinder (XX-long) (1)
5862 Big Bore shocks (hard-anodized & PTFE-coated T6 aluminum) (assembled with TiN shafts and springs) (front & rear) (4)
2660 Big Bore shocks (long) (hard-anodized & PTFE-coated T6 aluminum) (assembled with TiN shafts) w/o springs (front) (2)
2662 Big Bore shocks (XX-long) (hard-anodized & PTFE-coated T6 aluminum) (assembled with TiN shafts) w/o springs (rear) (2)
2669 Piston head set (2-hole (2)/ 3-hole (2))/ shock mounting bushings & washers (2) (Big Bore Shocks)
2362 Rebuild kit, Ultra shocks (for 2 shocks)
1942 Rod ends (16 long & 4 short)/ hollow ball connectors (18)/ ball screws (2)
2742X Rod ends, short (6)/ hollow balls (6)
2667 Shock caps, aluminum (Big Bore Shocks) (2)
1664T Shock shafts, hardened steel, titanium nitride coated (long) (2)
2656T Shock shafts, hardened steel, titanium nitride coated (xx-long) (2)
1664 Shock shafts, steel, chrome finish (long) (2)
2656 Shock shafts, steel, chrome finish (xx-long) (2)
1765 Silicone diaphragms (4)
1666 Silicone shock oil (30 wt)
2668 Spring retainers, upper & lower (2)/ spring pre-load spacers: 1mm (4)/ 1.5mm (2)/ 2mm (2)/ 4mm (2)/ 8mm (2) (Big Bore Shocks)
6863 Springs, front (progressive, +10% rate, pink) (2)
6864 Springs, front (progressive, +20% rate, blue) (2)
6862 Springs, front (progressive, -10% rate, green) (2)
6861 Springs, front (progressive, -20% rate, orange) (2)
6857 Springs, front (white) (progressive rate) (2)
6867 Springs, rear (progressive, +10% rate, pink) (2)
6868 Springs, rear (progressive, +20% rate, blue) (2)
6866 Springs, rear (progressive, -10% rate, green) (2)
6865 Springs, rear (progressive, -20% rate, orange) (2)
6858 Springs, rear (white) (progressive rate) (2)

Shocks (Ultra Shocks)

3642 Attachment screws, shock (3x12mm shoulder screws) (6)
3765A Body, Ultra Shock(s) (long) (grey) (2)
3766A Body, Ultra Shock(s) (XXL) (grey) (2)
2362 Rebuild kit, Ultra shocks (for 2 shocks)
1942 Rod ends (16 long & 4 short)/ hollow ball connectors (18)/ ball screws (2)
2742X Rod ends, short (6)/ hollow balls (6)
3767 Shock caps (2)/ shock bottoms (2)
3767A Shock caps, aluminum (blue-anodized) (4) (fits all Ultra Shocks)
3767G Shock caps, aluminum (green-anodized) (4) (fits all Ultra Shocks)
3767P Shock caps, aluminum (pink-anodized) (4) (fits all Ultra Shocks)
3767X Shock caps, aluminum (red-anodized) (4) (fits all Ultra Shocks)
1664T Shock shafts, hardened steel, titanium nitride coated (long) (2)
2656T Shock shafts, hardened steel, titanium nitride coated (xx-long) (2)
1664 Shock shafts, steel, chrome finish (long) (2)
2656 Shock shafts, steel, chrome finish (xx-long) (2)
1765 Silicone diaphragms (4)
1666 Silicone shock oil (30 wt)
3769 Spring pre-load spacers: 1mm (4)/ 2mm (2)/ 4mm (2)/ 8mm (2)
3768 Spring retainers, upper & lower (2)/ piston head set (2-hole (2)/ 3-hole (2))
6863 Springs, front (progressive, +10% rate, pink) (2)
6864 Springs, front (progressive, +20% rate, blue) (2)
6862 Springs, front (progressive, -10% rate, green) (2)
6861 Springs, front (progressive, -20% rate, orange) (2)
6857 Springs, front (white) (progressive rate) (2)
6867 Springs, rear (progressive, +10% rate, pink) (2)
6868 Springs, rear (progressive, +20% rate, blue) (2)
6866 Springs, rear (progressive, -10% rate, green) (2)
6865 Springs, rear (progressive, -20% rate, orange) (2)
6858 Springs, rear (white) (progressive rate) (2)
3760 Ultra Shocks (black) (long) (complete w/ spring pre-load spacers & springs) (front) (2)
3762 Ultra Shocks (black) (xx-long) (complete w/ spring pre-load spacers & springs) (rear) (2)
3760A Ultra Shocks (grey) (long) (complete w/ spring pre-load spacers & springs) (2)
3762A Ultra Shocks (grey) (xx-long) (complete w/ spring pre-load spacers & springs) (rear) (2)

Slipper Clutch Components

5119A Ball bearings, black rubber sealed (10x15x4mm) (2)
6893G Bearing adapter, 6061-T6 aluminum (green-anodized) (1)/ 10x15x4mm ball bearing (black rubber sealed) (1) (for slipper shaft)
6893X Bearing adapter, 6160-T6 aluminum (blue-anodized) (1)/10x15x4mm ball bearing (blue rubber sealed) (1) (for slipper shaft)
6814 Differential kit, center (complete)
6888 Drive hub, center, rear (1)/ 4x3 GS (1)
6888X Drive hub, front, hardened steel (1)/ screw pin (1)
6883 Gear set, center differential (output gears (2)/ spider gears (2)/ spider gear shaft)
6884 Housing, center differential/ x-ring gaskets (2)/ ring gear gasket/ bushings (2)/ 5x10x0.5 TW (2)/ CCS 2.5x8 (4)
6893 Input shaft (slipper shaft)/ bearing adapter (1)/pin (1)
5352R Rebuild kit (heavy duty), slipper clutch (steel disc/ aluminum friction pads (3)/ spring (1)/ 2x9.8mm pin/ 5x8mm MW/ 5.0mm NL (1)/ 4.0mm NL (1))
5352X Rebuild kit, slipper clutch (steel disc/ friction pads (3)/ spring (2)/ 2x9.8mm pin/ 5x8mm MW/ 5.0mm NL (1)/ 4.0mm NL (1))
5552X Rebuild kit, slipper clutch (steel disc/ friction pads (3)/ spring (2)/ pin/ 4.0mm NL (1)/ 5.0mm NL (1))
2554 Screws, 3x6mm cap-head machine (hex drive) (6)
6878 Slipper clutch, complete
5556 Slipper pressure plate & hub (aluminum alloy)
5351 Slipper pressure plate and hub (alloy)

Spur Gears & Pinion Gears

7477 Cover, gear/ wire retainer
3942X Gear, 12-T pinion (32-p), heavy duty (machined, hardened steel)/ set screw
3943X Gear, 13-T pinion (32-p), heavy duty (machined, hardened steel)/ set screw
3944X Gear, 14-T pinion (32-p), heavy duty (machined, hardened steel)/ set screw
3945X Gear, 15-T pinion (32-p), heavy duty (machined, hardened steel)/ set screw
3946X Gear, 16-T pinion (32-p), heavy duty (machined, hardened steel)/ set screw
3947X Gear, 17-T pinion (32-p), heavy duty (machined, hardened steel)/ set screw
3948X Gear, 18-T pinion (32-p), heavy duty (machined, hardened steel)/ set screw

BFGoodrich® Tires Trademarks are used under license from Michelin Group Companies.

3949X **Gear, 19-T pinion (32-p), heavy duty (machined, hardened steel)/ set screw**
3950X **Gear, 20-T pinion (32-p), heavy duty (machined, hardened steel)/ set screw**
3951X **Gear, 21-T pinion (32-p), heavy duty (machined, hardened steel)/ set screw**
3952X **Gear, 22-T pinion (32-p), heavy duty (machined, hardened steel)/ set screw**
6842 **Spur gear, 50-tooth (0.8 metric pitch, compatible with 32-pitch)**
6842R **Spur gear, 50-tooth (0.8 metric pitch, compatible with 32-pitch) (for center differential)**
6843 **Spur gear, 52-tooth (0.8 metric pitch, compatible with 32-pitch)**
6843R **Spur gear, 52-tooth (0.8 metric pitch, compatible with 32-pitch) (for center differential)**
3956 Spur gear, 54-tooth (0.8 metric pitch, compatible with 32-pitch)
3956R **Spur gear, 54-tooth (0.8 metric pitch, compatible with 32-pitch) (requires #6814 center differential)**
3956X **Spur gear, steel, 54-tooth (0.8 metric pitch, compatible with 32-pitch) (requires #6780 center differential)**

Steering Components

1552 Screws, 3x8mm cap-head machine (hex drive) (6)/washers (6)/ wrench
2728 **Ball bearings (5x8x2.5mm) (2)**
5114 Ball bearings, blue rubber sealed (5x8x2.5mm) (2)
6845A **Drag link, machined 6061-T6 aluminum (blue-anodized)**
6845G **Drag link, machined 6061-T6 aluminum (green-anodized)**
6845T **Drag link, machined 6061-T6 aluminum (orange-anodized)**
6845R **Drag link, machined 6061-T6 aluminum (red-anodized)**
7438 Linkage, steering
2742 Rod ends, long (6)/ hollow ball connectors (6)
6845X Steering bellcranks/ servo saver/ servo saver spring/ servo spring retainer/servo horn, steering
6742X **Toe links (TUBES blue-anodized, 7075-T6 aluminum, stronger than titanium) (87mm) (2)/ rod ends (4)/ aluminum wrench (1)**
6742G **Toe links (TUBES green-anodized, 7075-T6 aluminum, stronger than titanium) (87mm) (2)/ rod ends (4)/ aluminum wrench (1)**
6742R **Toe links (TUBES red-anodized, 7075-T6 aluminum, stronger than titanium) (87mm) (2)/ rod ends (4)/ aluminum wrench (1)**
2746 Washers, 3x6mm metal (12)

Suspension Linkage

3643X **Camber links, front (TUBES blue-anodized, 7075-T6 aluminum, stronger than titanium) (83mm) (2)/ rod ends (4)/ aluminum wrench (1) (#2579 3x15 BCS (4) required for installation)**
3643G **Camber links, front (TUBES green-anodized, 7075-T6 aluminum, stronger than titanium) (83mm) (2)/ rod ends (4)/ aluminum wrench (1) (#2579 3x15 BCS (4) required for installation)**
3643R **Camber links, front (TUBES red-anodized, 7075-T6 aluminum, stronger than titanium) (83mm) (2)/ rod ends (4)/ aluminum wrench (1) (#2579 3x15 BCS (4) required for installation)**
3644X **Camber links, rear (TUBES blue-anodized, 7075-T6 aluminum, stronger than titanium) (73mm) (2)/ rod ends (4)/ aluminum wrench (1) (#2579 3x15 BCS (4) required for installation)**
3644G **Camber links, rear (TUBES green-anodized 7075-T6 aluminum, stronger than titanium) (73mm) (2)/ rod ends (4)/ aluminum wrench (1) (#2579 3x15 BCS (4) required for installation)**
3644R **Camber links, rear (TUBES red-anodized, 7075-T6 aluminum, stronger than titanium) (73mm) (2)/ rod ends (4)/ aluminum wrench (1) (#2579 3x15 BCS (4) required for installation)**
5525 Rod ends (12)/ hollow balls (12)
3739 Screw pin set (Rustler®/ Bandit/ Stampede®)
6834 Suspension pin set, complete (front and rear)
2537 Threaded rods (20/25/44mm 1 ea.)/ (1) 12mm set screw
3644 Turnbuckles, camber link, 39mm (69mm center to center) (assembled with rod ends and hollow balls) (1 left, 1 right) (fits front & rear on Slash)
3643 Turnbuckles, camber link, 49mm (82mm center to center) (assembled with rod ends and hollow balls) (1 left, 1 right)
5539 Turnbuckles, camber links, 58mm (assembled with rod ends and hollow balls) (2)

Team Traxxas Items

2514 **Decal sheet, racing sponsors**
6160X **DVD, Maxx® Power! Full Throttle Action (sleeve)**
9950 **Official Team Traxxas® racing decal set (flag logo/ 6-color)**
9909 **Traxxas® racing banner, red & black (3x7 feet)**

Tires & Wheels

5116 Ball bearings, blue rubber sealed (5x11x4mm) (2)
5854 **Hub retainer, 17mm hubs, M4 X 0.7 (4) (use with #5853X, #6856X, #6469)**
3647 Nuts, 4mm flanged nylon locking (steel, serrated) (8)
1747R Nuts, aluminum, flanged, serrated (4mm) (blue-anodized) (4)
1985 PTFE-coated washers, 5x8x0.5mm (20) (use with ball bearings)
1647 Silicone grease
2754 Stub axle pins (4)
5880X **Tires & wheels, assembled, glued (SCT satin chrome, beadlock style wheels, Kumho tires, foam inserts) (2) (4WD front/rear, 2WD rear only)**
5887R **Tires & wheels, assembled, glued (S1 compound) (SCT chrome wheels, red beadlock style, dual profile (2.2" outer, 3.0" inner), SCT off-road racing tires, foam inserts) (2) (4WD f/r, 2WD rear) (TSM rated)**
5889R **Tires & wheels, assembled, glued (S1 compound) (SCT Split-Spoke black, satin chrome beadlock style wheel, dual profile (2.2" outer, 3.0" inner), SCT off-road racing tires, foam inserts) (2) (4WD f/r, 2WD rear) (TSM rated)**
6891R **Tires & wheels, assembled, glued (S1 compound) (SCT Split-Spoke chrome, red beadlock style wheels, dual profile (2.2" outer, 3.0" inner), SCT off-road racing tires, foam inserts) (2) (4WD f/r, 2WD rear) (TSM rated)**
6892R **Tires & wheels, assembled, glued (S1 compound) (SCT Split-Spoke satin chrome, black beadlock style wheels, dual profile (2.2" outer, 3.0" inner), SCT off-road racing tires, foam inserts) (2) (4WD f/r, 2WD rear) (TSM rated)**
5863R **Tires & wheels, assembled, glued (S1 compound) (SCT, black, orange beadlock wheels, dual profile (2.2" outer, 3.0" inner), SCT off-road racing tires, foam inserts) (2) (4WD f/r, 2WD rear) (TSM® rated)**
6873X **Tires & wheels, assembled, glued (S1 ultra-soft off-road racing compound) (SCT Split-Spoke satin chrome, black beadlock style wheels, BFG Mud-Terrain tires, foam inserts) (2) (4WD front/rear, 2WD rear only)**
6874R **Tires & wheels, assembled, glued (S1 ultra-soft off-road racing compound) (SCT Split-Spoke satin chrome, black beadlock style wheels, Kumho tires, foam inserts) (2) (4WD front/rear, 2WD rear only)**
6873R **Tires & wheels, assembled, glued (S1 ultra-soft, off-road racing compound) (SCT Split-Spoke chrome, red beadlock style wheels, BFGoodrich® Mud-Terrain™ T/A® KM2 tires, foam inserts) (2) (4WD f/r, 2WD rear)**
5887 **Tires & wheels, assembled, glued (SCT chrome wheels, red beadlock style, dual profile (2.2" outer, 3.0" inner), SCT off-road racing tires, foam inserts) (2) (4WD f/r, 2WD rear) (TSM rated)**
5867 **Tires & wheels, assembled, glued (SCT chrome, red beadlock style wheels, BFGoodrich® Mud-Terrain™ T/A® KM2 tires, foam inserts) (2)(4WD front/rear, 2WD rear only)**
5873R **Tires & wheels, assembled, glued (SCT satin chrome red beadlock wheels, ultra-soft S1 compound off-road racing tires, inserts) (2) (2WD rear, 4WD f/r)**
5878 **Tires & wheels, assembled, glued (SCT satin chrome, black beadlock style wheels, BFGoodrich® Mud-Terrain™ T/A® KM2 tires, foam inserts) (2)(4WD front/rear, 2WD rear only)**
5873X **Tires & wheels, assembled, glued (SCT satin chrome, black beadlock style wheels, SCT off-road racing tires, foam inserts) (2) (4WD front/rear, 2WD rear only)**
6873T Tires & wheels, assembled, glued (SCT Split-Spoke black chrome beadlock style wheels, BFGoodrich® Mud-Terrain™ T/A® KM2 ultra-soft S1 compound off-road racing tires, foam inserts) (2) (4WD f/r, 2WD rear) (TSM® rated)
5889 **Tires & wheels, assembled, glued (SCT Split-Spoke black, satin chrome beadlock style wheel, dual profile (2.2" outer, 3.0" inner), SCT off-road racing tires, foam inserts) (2) (4WD f/r, 2WD rear) (TSM rated)**
6891 **Tires & wheels, assembled, glued (SCT Split-Spoke chrome, red beadlock style wheels, dual profile (2.2" outer, 3.0" inner), SCT off-road racing tires, foam inserts) (2) (4WD f/r, 2WD rear) (TSM rated)**
5891 **Tires & wheels, assembled, glued (SCT Split-Spoke satin chrome, beadlock style wheels, paddle tires, foam inserts) (2) (4WD front/rear, 2WD rear only) (TSM rated)**
6892 **Tires & wheels, assembled, glued (SCT Split-Spoke satin chrome, black beadlock style wheels, dual profile (2.2" outer, 3.0" inner), SCT off-road racing tires, foam inserts) (2) (4WD f/r, 2WD rear) (TSM rated)**
5883 **Tires & wheels, assembled, glued (SCT Split-Spoke, black, satin chrome beadlock wheels, BFGoodrich® Mud-Terrain™ T/A® KM2 tire, foam inserts) (2) (4WD f/r, 2WD rear)**
6871R **Tires, BFGoodrich® Mud-Terrain T/A® KM2 , ultra-soft (S1 off-road racing compound) (dual profile 4.3x1.7- 2.2/3.0") (2)/ foam inserts (2)**
5871R **Tires, ultra-soft, S1 compound for off-road racing, SCT dual profile 4.3x1.7- 2.2/3.0" (2)/ foam inserts (2)**
1654 Wheel hubs, hex (rear) (2)/ stub axle pins (2)
1654X **Wheel hubs, hex (blue-anodized, lightweight aluminum) (2)/ axle pins(4)**
6856X **Wheel hubs, splined, 17mm, short (4)/ wheel nuts, splined, 17mm (4) (blue-anodized)/ hub retainer M4 X 0.7 (4)/ axle pin (4)/ wrench, 5mm**

BFGoodrich® Tires Trademarks are used under license from Michelin Group Companies.

SLASH® ULTIMATE 68077-4 6804R)

5353	Wheel nuts, splined, 17mm (blue-anodized) (4)
5480X	Wheel wrench, splined, 17mm
5868	Wheels, SCT chrome, red beadlock style, dual profile (2.2” outer, 3.0” inner) (4WD front/rear, 2WD rear only) (2)
5872	Wheels, SCT satin chrome, beadlock style, dual profile (2.2" outer, 3.0" inner) (4WD front/rear, 2WD rear only)
5872X	Wheels, SCT satin chrome, black beadlock style SCT, dual profile (2.2” outer, 3.0” inner) (4WD front/rear, 2WD rear only) (2)
5872A	Wheels, SCT satin chrome, red beadlock style, dual profile (2.2" outer, 3.0" inner) (4WD front/rear, 2WD rear only) (2)
5884	Wheels, SCT Split-Spoke, black, satin chrome beadlock style, dual profile (2.2" outer, 3.0" inner) (4WD f/r, 2WD rear) (2)
6872X	Wheels, SCT Split-Spoke, chrome, green beadlock style, dual profile (2.2" outer, 3.0" inner) (4WD front/rear, 2WD rear) (2)
6872A	Wheels, SCT Split-Spoke, chrome, red beadlock style, dual profile (2.2" outer, 3.0" inner) (4WD front/rear, 2WD rear) (2)
6872	Wheels, SCT Split-Spoke, satin chrome, black beadlock style, dual profile (2.2" outer, 3.0" inner) (4WD front/rear, 2WD rear only) (2)

Traxxas Tools

3433X	Body reamer (aluminum handle)
3433	Body reamer (plastic handle)
3436	Cap, body reamer
3432	Scissors, curved tip
3431	Scissors, straight tip
8712	Speed Bit Essentials Set, hex and nut driver, 7-piece, includes premium handle (medium), travel pouch, hex drivers (straight: 1.5mm, 2.0mm, 2.5mm) and nut drivers (5.0mm, 5.5mm, 7.0mm, and 8.0mm), 1/4” drive
8721	Speed bit handle, medium (one piece)
8720	Speed bit handle, premium, large (rubber overmold)
8722	Speed bit handle, premium, medium (rubber overmold)
8710	Speed Bit Master Set, hex and nut driver, 13-piece, includes premium handle (medium), travel pouch, hex drivers (straight: 1.5mm, 2.0mm, 2.5mm, 3.0mm), (ball-end: 2.0mm, 2.5mm, 3.0mm), and nut drivers (4.00mm, 4.50mm, 5.00mm, 5.50mm, 7.00mm, 8.00mm),
8711	Speed Bit Master Set, hex driver, 7-piece straight and ball end, includes premium handle (medium), travel pouch, hex drivers (straight: 1.5mm, 2.0mm, 2.5mm, 3.0mm) (ball end: 2.0mm, 2.5mm, 3.0mm), 1/4" drive
8719	Speed Bit Master Set, nut driver, 6-piece, includes premium handle (medium), travel pouch, and nut drivers (4.0mm, 4.5mm, 5.0mm, 5.5mm, 7.0mm, 8.0mm), 1/4" drive
8716	Speed Bit Set, hex driver, 2-piece ball-end (2.0mm, 2.5mm), 1/4" drive
8716X	Speed Bit Set, hex driver, 3-piece ball-end (2.0mm, 2.5mm, 3.0mm), 1/4" drive
8715	Speed Bit Set, hex driver, 3-piece straight (1.5mm, 2.0mm, 2.5mm), 1/4" drive
8715X	Speed Bit Set, hex driver, 4-piece straight (1.5mm, 2.0mm, 2.5mm, 3.0mm), 1/4" drive
3415	Tool set with pouch (includes 1.5mm, 2.0mm, 2.5mm, 3.0mm, 3.5mm, 4mm drivers/ 4mm, 5mm, 5.5mm, 7mm and 8mm nut drivers/ 2mm, 4mm, and 5mm slotted screwdrivers/ #00 Phillips, #0 Phillips, and #1 Phillips screwdrivers/ 4mm and 8mm wrench/ driver handle

Turnbuckles & Threaded Rods

3643X	Camber links, front (TUBES blue-anodized, 7075-T6 aluminum, stronger than titanium) (83mm) (2)/ rod ends (4)/ aluminum wrench (1) (#2579 3x15 BCS (4) required for installation)
3643G	Camber links, front (TUBES green-anodized, 7075-T6 aluminum, stronger than titanium) (83mm) (2)/ rod ends (4)/ aluminum wrench (1) (#2579 3x15 BCS (4) required for installation)
3643R	Camber links, front (TUBES red-anodized, 7075-T6 aluminum, stronger than titanium) (83mm) (2)/ rod ends (4)/ aluminum wrench (1) (#2579 3x15 BCS (4) required for installation)
3644X	Camber links, rear (TUBES blue-anodized, 7075-T6 aluminum, stronger than titanium) (73mm) (2)/ rod ends (4)/ aluminum wrench (1) (#2579 3x15 BCS (4) required for installation)
3644G	Camber links, rear (TUBES green-anodized 7075-T6 aluminum, stronger than titanium) (73mm) (2)/ rod ends (4)/ aluminum wrench (1) (#2579 3x15 BCS (4) required for installation)
3644R	Camber links, rear (TUBES red-anodized, 7075-T6 aluminum, stronger than titanium) (73mm) (2)/ rod ends (4)/ aluminum wrench (1) (#2579 3x15 BCS (4) required for installation)
5525	Rod ends (12)/ hollow balls (12)
6742X	Toe links (TUBES blue-anodized, 7075-T6 aluminum, stronger than titanium) (87mm) (2)/ rod ends (4)/ aluminum wrench (1)
6742G	Toe links (TUBES green-anodized, 7075-T6 aluminum, stronger than titanium) (87mm) (2)/ rod ends (4)/ aluminum wrench (1)
6742R	Toe links (TUBES red-anodized, 7075-T6 aluminum, stronger than titanium) (87mm) (2)/ rod ends (4)/ aluminum wrench (1)
3644	Turnbuckles, camber link, 39mm (69mm center to center) (assembled with rod ends and hollow balls) (1 left, 1 right) (fits front & rear on Slash)
3643	Turnbuckles, camber link, 49mm (82mm center to center) (assembled with rod ends and hollow balls) (1 left, 1 right)
5539	Turnbuckles, camber links, 58mm (assembled with rod ends and hollow balls) (2)

If you have questions or need technical assistance, call Traxxas at:

1-888-TRAXXAS

(1-888-872-9927) (U.S. residents only)

For orders, calls outside the U.S., and other information, call 972-549-3000, or fax to 972-549-3011 e-mail Traxxas at support@Traxxas.com

TRAXXAS.com

BFGoodrich® Tires Trademarks are used under license from Michelin Group Companies.

REV. 201002 1231

SLASH 4X4 VXL

MODEL 68086-4

1/10 SCALE 4WD BRUSHLESS SHORT COURSE TRUCK



TRAXXAS SCT TIRES, 2.2", PRE-GLUED WITH FOAM INSERTS

VELINEON BRUSHLESS POWER SYSTEM

TQi 2.4GHz TRANSMITTER COMPATIBLE WITH TRAXXAS LINK WIRELESS MODULE

AWARD-WINNING 4WD INNOVATION & PERFORMANCE!

Slash 4X4, now with Traxxas Stability Management. It's what you would expect from a Slash: tough, fast, fun, and yes, 4-wheel drive! Slash 4X4 is purpose-built for over-the-top speed and performance. Traxxas engineering is behind the innovation that fuels the hobby, and Slash 4X4 takes full advantage. The long list of features includes a rigid chassis, super-efficient shaft drive, race-bred suspension and steering system, Revo® sealed differentials, Velineon™ brushless power, and a TQi 2.4GHz radio system. The weight bias? Perfect. The look? Dead on. Top speed? 40+mph with optional 7-cell NiMH battery pack (sold separately). Power Up™ to the MXL-6s (it drops right in!), and 80mph is in your reach. Slash 4X4 keeps all the great features and characteristics that made Slash such a hit with enthusiasts, while at the same time injecting new thinking, new components, and proven performance.

*With 3S LiPo battery (sold separately) and optional gearing

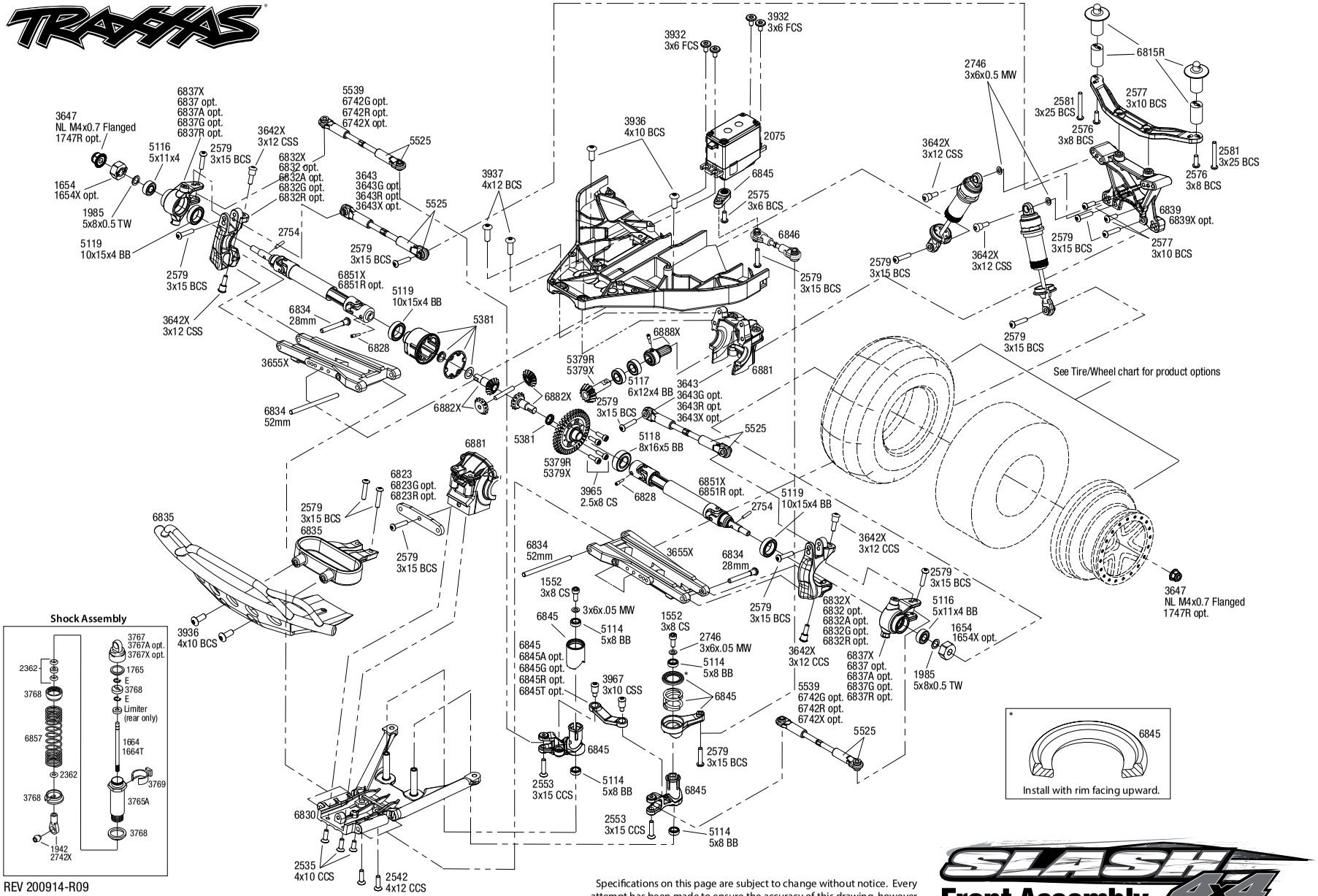
3647
NL M4x0.7 Flanged
1747R opt.
1654
1654X opt.
1985
5x8x0.5 TW
5119
10x15x4 BB
5116
5x11x4
6837X
6837 opt.
6837A opt.
6837G opt.
6837R opt.
2579
3x15 BCS
3642X
3x12 CSS
6832X
6832 opt.
6832A opt.
6832G opt.
6832R opt.
5539
6742G opt.
6742R opt.
6742X opt.
5525
3643
3643G opt.
3643R opt.
3643X opt.
2754
6851X
6851R opt.
6834
28mm
6828
3655X
6834
52mm
3642X
3x12 CSS
3937
4x12 BCS
3932
3x6 FCS
3936
4x10 BCS
2075
6845
2575
3x6 BCS
6846
2579
3x15 BCS
6888X
6881
5379R
5379X
5117
6x12x4 BB
6882X
5381
5118
8x16x5 BB
3965
2.5x8 CS
6823
6823G opt.
6823R opt.
6835
3936
4x10 BCS
1552
3x8 CS
3x6x.05 MW
6845
6845A opt.
6845G opt.
6845R opt.
6845T opt.
5114
5x8 BB
3967
3x10 CSS
2553
3x15 CCS
6830
2535
4x10 CCS
2542
4x12 CCS
2746
3x6x0.5 MW
6815R
2581
3x25 BCS
2577
3x10 BCS
2576
3x8 BCS
6839
6839X opt.
3642X
3x12 CCS
6832X
6832 opt.
6832A opt.
6832G opt.
6832R opt.
5116
5x11x4 BB
1654
1654X opt.
1985
5x8x0.5 TW
6837X
6837 opt.
6837A opt.
6837G opt.
6837R opt.
5539
6742G opt.
6742R opt.
6742X opt.
5525
3647
NL M4x0.7 Flanged
1747R opt.
See Tire/Wheel chart for product options
Shock Assembly
3767
3767A opt.
3767X opt.
1765
E
3768
E
Limiter
(rear only)
1664
1664T
3769
3765A
3768
1942
2742X
2362
3768
6857
2362
3768
REV 200914-R09
See Parts List for a complete
listing of optional accessories.
Install with rim facing upward.
Specifications on this page are subject to change without notice. Every attempt has been made to ensure the accuracy of this drawing, however Traxxas cannot be held responsible for typographical or other errors.
SLASH 4x4
Front Assembly

SLASH® 4X4 (68086-4)

Chassis Assembly

See Parts List for a complete listing of optional accessories.

REV 200914-R09

Specifications on this page are subject to change without notice. Every attempt has been made to ensure the accuracy of this drawing, however Traxxas cannot be held responsible for typographical or other errors.

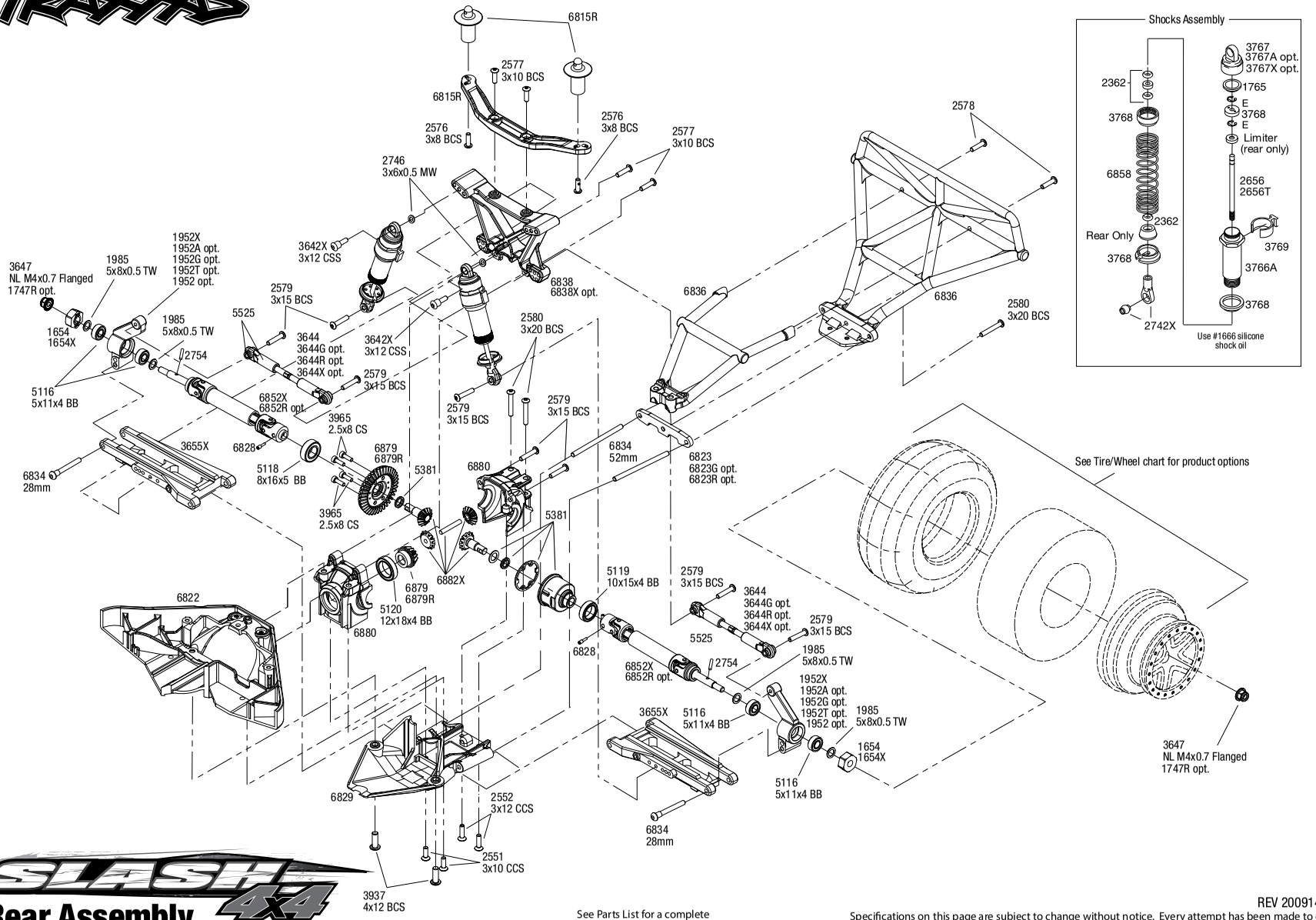

SLASH 4x4
Rear Assembly

See Parts List for a complete listing of optional accessories.

REV 200914-R09

Specifications on this page are subject to change without notice. Every attempt has been made to ensure the accuracy of this drawing, however Traxxas cannot be held responsible for typographical or other errors.

SLASH® 4X4 (68086-4)

Transmission Assembly

Specifications on this page are subject to change without notice. Every attempt has been made to ensure the accuracy of this drawing, however Traxxas cannot be held responsible for typographical or other errors.

REV 200914-R09

See Parts List for a complete listing of optional accessories.

Questions? **Call toll-free, 1-888-TRAXXAS**

Driveshafts

Rear Driveshaft Assembly
Available fully assembled as part #6852X

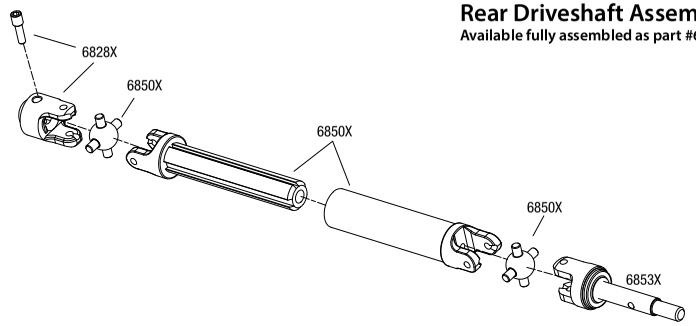

Front Driveshaft Assembly
Available fully assembled as part #6851X

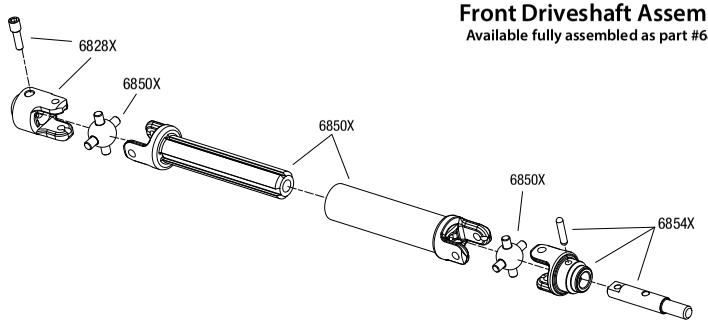

Modular Assembly

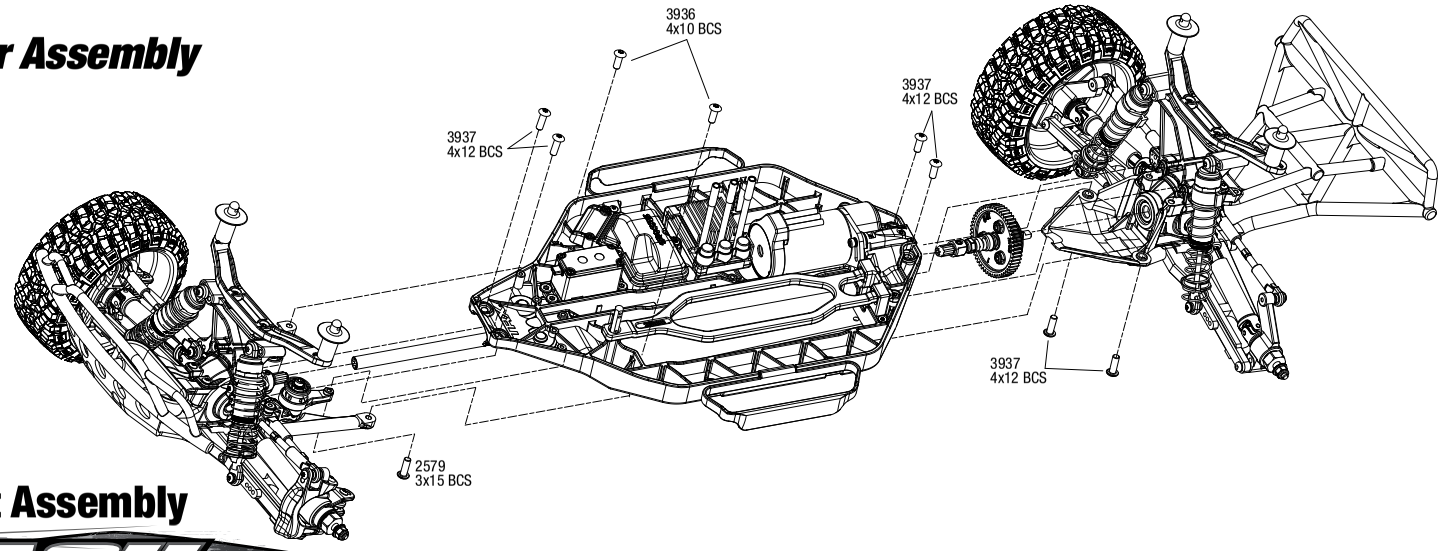

Driveshaft Assembly

REV 200914-R09

Specifications on this page are subject to change without notice.
Every attempt has been made to ensure the accuracy of this drawing, however Traxxas cannot
be held responsible for typographical or other errors. See Parts List for a complete listing of optional accessories.

Questions? Call toll-free, 1-888-TRAXXAS

SLASH 4X4 Wheel and Tire Chart

TRAXXAS

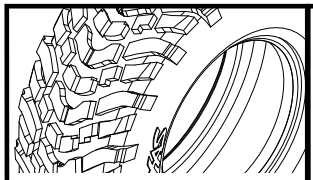

Traxxas SCT Tires with Foam Inserts

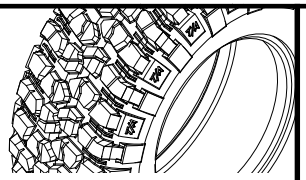

BFGoodrich® Mud Terrain™ T/A® Tires with Foam Inserts

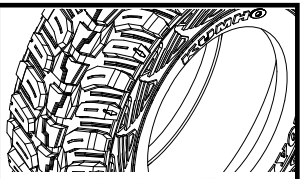

Kumho Road Venture MT tires with Foam Inserts

	Wheels*		5871 Assembled Wheels and Tires	*S1 Ultra-Soft Racing Compound* 5871R Assembled Wheels and Tires	6871 Assembled Wheels and Tires	*S1 Ultra-Soft Racing Compound* 6871R Assembled Wheels and Tires	6870 Assembled Wheels and Tires	*S1 Ultra-Soft Racing Compound* 6870R Assembled Wheels and Tires
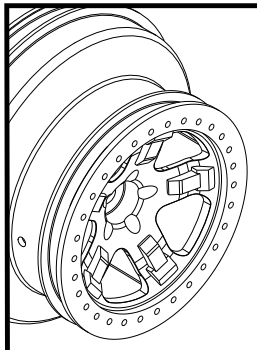 Traxxas SCT Wheels	Satin Beadlock/ Satin Wheel - Slash Rear or Slash 4X4 Front/Rear	5872	5873†	-	-	-	-	-
	Satin Beadlock/ Satin Wheel - Slash Front	5874	5875	-	-	-	-	-
	Red Beadlock/ Satin Wheel - Slash Rear or Slash 4X4 Front/Rear	5872A	5873A	5873R	-	-	-	-
	Red Beadlock/ Satin Wheel - Slash Front	5874A	-	-	-	-	-	-
	Black Beadlock/ Satin Wheel - Slash Rear or Slash 4X4 Front/Rear	5872X	5873X	-	5878	-	5880X	-
	Black Beadlock/ Satin Wheel - Slash Front	5874X	5875X	-	-	-	5881X	-
	Red Beadlock/ Chrome Wheel - Slash Rear or Slash 4X4 Front/Rear	5868	-	-	5867	-	-	-
	Red Beadlock/ Chrome Wheel - Slash Front	5870	-	-	5869	-	-	-
	Green Beadlock/ Chrome Wheel - Slash Front	5866	-	-	5865	-	-	-
	Green Beadlock/ Chrome Wheel - Slash Rear or Slash 4X4 Front/Rear	6875	-	-	6876	-	-	-
	Orange Beadlock/ Black Wheel - Slash Front	5870X	5864	-	-	-	-	-
	Orange Beadlock/ Black Wheel -Slash Rear or Slash 4X4 Front/Rear	5868X	5863†	5863R†	-	-	-	-
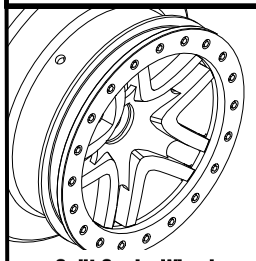 Split Spoke Wheels	Black Beadlock/ Satin Wheel - Slash Rear or Slash 4X4 Front/Rear	6872	-	-	6873†	6873X	6874	6874R
	Black Beadlock/ Satin Wheel - Slash Front	5876	-	-	5877	-	5882	5882R
	Red Beadlock/ Chrome Wheel - Slash Rear or Slash 4X4 Front/Rear	6872A	-	-	6873A	6873R	-	-
	Red Beadlock/ Chrome Wheel - Slash Front	5876A	-	-	5877A	5877R	-	-
	Green Beadlock/ Chrome Wheel - Slash Rear or Slash 4X4 Front/Rear Front	6872X	-	-	-	-	-	-
	Satin Beadlock/ Black Wheel - Slash Front	5886	-	-	5885	-	-	-
	Satin Beadlock/ Black Wheel - Slash Rear or Slash 4X4 Front/Rear	5884	-	-	5883	-	-	-
	Blue Beadlock/ Black Wheel - Slash Front	5886A	-	-	5885A	-	-	-
	Blue Beadlock/ Black Wheel - Slash Rear or Slash 4X4 Front/Rear	5884A	-	-	5883A	-	-	-

* Wheels and/or tires sold in pairs
†TSM rated

Specifications on this page are subject to change without notice. Every attempt has been made to ensure the accuracy of this drawing, however Traxxas cannot be held responsible for typographical or other errors. See Parts List for a complete listing of optional accessories.

BFGoodrich® Tires Trademarks are used under license from Michelin Group Companies.

REV 200914-R09

PARTS SHOWN IN BOLD ARE OPTIONAL ACCESSORIES.

Part categories and individual part listings are arranged alphabetically.

Bearings & Bushings

4607 **Ball bearings (5x11x4mm) (8)**
4612 **Ball bearings (10x15x4mm) (2)**
2728 **Ball bearings (5x8x2.5mm) (2)**
5119A Ball bearings, black rubber sealed (10x15x4mm) (2)
5119 Ball bearings, blue rubber sealed (10x15x4mm) (2)
5120 Ball bearings, blue rubber sealed (12x18x4mm) (2)
5116 Ball bearings, blue rubber sealed (5x11x4mm) (2)
5114 Ball bearings, blue rubber sealed (5x8x2.5mm) (2)
5117 Ball bearings, blue rubber sealed (6x12x4mm) (2)
5118 Ball bearings, blue rubber sealed (8x16x5mm) (2)
3934 Body clips, heavy duty (12)
1985 PTFE-coated washers, 5x8x0.5mm (20) (use with ball bearings)

Body & Accessories

1926 Antenna caps, vinyl (2)/ antenna spool
1726 Antenna, tube (1)/ vinyl antenna cap (1)/ wire retainer (1)
3935 Body clip (mounting clip), angled, 90-degrees (10)
3935A **Body clip (mounting clip), angled, 90-degrees (black) (10)**
3934 Body clips, heavy duty (12)
6815R Body mount (1)/ body mount post (2)/ body post extensions (2) (front or rear)
1815 Body washers (8)
6716 **Body washers, foam, 2mm (2)/ 3mm (2)/ 4mm (4)**
6811 **Body, Slash 4X4 (clear, requires painting)/ window masks/ decal sheet**
5849 **Body, Slash 4X4, Hawaiian graphics (painted, decals applied)**
6811R **Body, Slash 4X4, heavy duty (clear, untrimmed, requires painting)/ window masks/ decal sheet**
5824 **Body, Slash 4X4, Keegan Kincaid (painted, decals applied)**
5850 **Body, Slash 4X4, orange (painted, decals applied)**
6811X **Body, Slash 4X4, ProGraphix (Graphics are printed, requires paint & final color application)/ decal sheet**
5812 **Body, Slash 4X4, ProGraphix® (Graphics are printed, requires paint & final color application)/ decal sheet**
5824R **Body, Slash 4X4, red (painted, decals applied)**
5848 **Body, Slash 4X4, Rock n' Roll (painted, decals applied)**
6849 **Body, Slash 4X4/Slash, Fox Edition (painted, decals applied)**
2514 **Decal sheet, racing sponsors**
6813 Decal sheet, Slash 4X4
9950 **Official Team Traxxas® racing decal set (flag logo/ 6-color)**

Center Driveline

5119A Ball bearings, black rubber sealed (10x15x4mm) (2)
5119 Ball bearings, blue rubber sealed (10x15x4mm) (2)
5120 Ball bearings, blue rubber sealed (12x18x4mm) (2)
5116 Ball bearings, blue rubber sealed (5x11x4mm) (2)
5117 Ball bearings, blue rubber sealed (6x12x4mm) (2)
6893G **Bearing adapter, 6061-T6 aluminum (green-anodized) (1)/ 10x15x4mm ball bearing (black rubber sealed) (1) (for slipper shaft)**
6893X **Bearing adapter, 6160-T6 aluminum (blue-anodized) (1)/10x15x4mm ball bearing (blue rubber sealed) (1) (for slipper shaft)**
6841 Cover, center driveshaft (clear)
6877A **Cover, gear (clear)**
6877 Cover, gear/ motor wire hold-down clip
6814 **Differential kit, center (complete)**
6888 Drive hub, center, rear (1)/ 4x3 GS (1)
6888X Drive hub, front, hardened steel (1)/ screw pin (1)
6883 **Gear set, center differential (output gears (2)/ spider gears (2)/ spider gear shaft)**
5148 Grease, white lithium
6884 **Housing, center differential/ x-ring gaskets (2)/ ring gear gasket/ bushings (2)/ 5x10x0.5 TW (2)/ CCS 2.5x8 (4)**
6893 Input shaft (slipper shaft)/ bearing adapter (1)/pin (1)
6890 Plate, motor
6890X **Plate, motor, 6061-T6 aluminum (blue-anodized)**
5352R **Rebuild kit (heavy duty), slipper clutch (steel disc/ aluminum friction pads (3)/ spring (1)/ 2x9.8mm pin/ 5x8mm MW/ 5.0mm NL (1)/ 4.0mm NL (1))**
5352X **Rebuild kit, slipper clutch (steel disc/ friction pads (3)/ spring (2)/ 2x9.8mm pin/ 5x8mm MW/ 5.0mm NL (1)/ 4.0mm NL (1))**
5552X Rebuild kit, slipper clutch (steel disc/ friction pads (3)/ spring (2)/ pin/ 4.0mm NL (1)/ 5.0mm NL (1))
2575 Screws, 3x6mm button-head machine (hex drive) (6)
2554 Screws, 3x6mm cap-head machine (hex drive) (6)
3932 Screws, 3x6mm flat-head machine (hex drive) (6)
1647 Silicone grease
6878 Slipper clutch, complete
5556 Slipper pressure plate & hub (aluminum alloy)
5351 **Slipper pressure plate and hub (alloy)**

Chassis & Attachments

6815R Body mount (1)/ body mount post (2)/ body post extensions (2) (front or rear)
3924 Box, receiver (sealed)/ foam pad/ silicone grease/2.5x8mm BCS (2)/ 3x10mm CCS (2)/ 3x15mm CCS (2)
3628 **Box, receiver (sealed)/ foam pad/2.5x8mm CS (4)/ 3x10mm CS (2)**
6835 Bumper, front/ bumper mount, front (black)
6836 Bumper, rear/ bumper mount, rear (black)
7421 **Chassis conversion kit, low CG (Slash 4x4)**
6822 Chassis, Slash 4X4
6841 Cover, center driveshaft (clear)
5827 Hold down, battery/ hold down retainer/ battery post/ foam spacer/ angled body clip
5827X Hold down, battery/ hold down retainer/ battery post/ foam spacer/ angled body clip (allows for installation of taller, multi-cell batteries)
6840 **Mount, Go-pro camera, fiberglass**
3629 **Seal kit, receiver box (includes o-ring, seals, and silicone grease)**
3925 Seal kit, receiver box (includes o-ring, seals, and silicone grease)

Differential Components

5119 Ball bearings, blue rubber sealed (10x15x4mm) (2)
5117 Ball bearings, blue rubber sealed (6x12x4mm) (2)
5118 Ball bearings, blue rubber sealed (8x16x5mm) (2)
5381 Carrier, differential/ x-ring gaskets (2)/ ring gear gasket/ 6x10x0.5 TW
6780 **Differential kit, center (complete)**
6814 **Differential kit, center (complete)**
5136X **Differential oil kit (1 each: 10K, 30K, 50K weights)**
6783 **Gear set, center differential (output gears (2)/ spider gears (4)/ spider gear shaft (2))**
6882X Gear set, differential (output gears (2)/ spider gears (2)/ spider gear shaft, carrier support)
6781 **Housing, center differential (aluminum)/ x-ring gaskets (2)/ ring gear gasket/ bushings (2)/ 5x10x0.5mm PTFE-coated washers (2)/ 2.5x8 CCS (4)**
6881 Housings, differential, front
6880 Housings, differential, rear
6782 **Output gears, center differential, hardened steel (2)**
5379X Ring gear, differential/ pinion gear, differential
5379R **Ring gear, differential/ pinion gear, differential (machined, spiral cut) (front)**
6879R **Ring gear, differential/ pinion gear, differential (machined, spiral cut) (rear)**
6879 Ring gear, differential/ pinion gear, differential (rear)
3965 Screws, 2.5x8mm cap-head machine (6)
1647 Silicone grease

Driveline Components

5119A Ball bearings, black rubber sealed (10x15x4mm) (2)
5119 Ball bearings, blue rubber sealed (10x15x4mm) (2)
5116 Ball bearings, blue rubber sealed (5x11x4mm) (2)
9059X **Cross pin (2)/ drive pin (2) (repairs 2 axle shafts)**
9057X **Differential output shafts, steel-splined constant-velocity (2)**
6828A **Differential output yoke assembly, extreme heavy duty (2) (left or right, front or rear) (assembled with external-splined half shaft)**
6828X Differential output yokes, heavy duty (2)/ screw pin (2)
6851X Driveshaft assembly, front, heavy duty (1) (left or right) (fully assembled, ready to install)/ screw pin (1)
6852X Driveshaft assembly, rear, heavy duty (1) (left or right) (fully assembled, ready to install)/ screw pin (1)
6855 Driveshaft, center, 6061-T6 aluminum (blue-anodized)
6855G **Driveshaft, center, 6061-T6 aluminum (green-anodized)**
6855R **Driveshaft, center, 6061-T6 aluminum (red-anodized)**
6851R **Driveshafts, front, steel-spline constant-velocity (complete assembly) (2)**
9051X **Driveshafts, front, steel-spline constant-velocity (complete assembly) (2)**
6852R **Driveshafts, rear, steel-spline constant-velocity (complete assembly) (2)**
9052X **Driveshafts, rear, steel-spline constant-velocity (complete assembly) (2)**
9055X **Half shaft, external splined (steel-spline constant velocity) (1)**
6750 **Half shaft, external splined (steel-spline constant-velocity) (1)**

SLASH® 4X4 (68086-4)

9056X **Half shaft, internal splined (steel-spline constant velocity) (1)**
6751 **Half shaft, internal splined (steel-spline constant-velocity) (1)**
6850X Half shafts, heavy duty (external splined (2)/ internal splined (2))/ metal u-joints (4)
6757 **Rebuild kit, steel-splined constant-velocity driveshafts (includes pins, dustboots, lube, and hardware)**
9058X **Rebuild kit, steel-splined constant-velocity driveshafts (includes pins, lube, and hardware for two axle shafts)**
6854A **Stub axle assembly, front, outer, extreme heavy duty (1) (left or right) (assembled with internal-splined half shaft)**
6853A **Stub axle assembly, rear, outer, extreme heavy duty (1) (left or right) (assembled with internal-splined half shaft)**
6754 **Stub axle, front, 5mm (steel-splined constant-velocity driveshaft) (1)**
9054X **Stub axle, front, steel-splined constant velocity (1)**
6753 **Stub axle, rear, 5mm (steel-splined constant-velocity driveshaft) (1)**
9053X **Stub axle, rear, steel-splined constant velocity (1)**
6854X Stub axles, front, heavy duty (2)/ yokes (2)/ pins (4)
6853X Stub axles, rear, heavy duty (2)/pins (2)

Front Suspension & Steering

2728 Ball bearings (5x8x2.5mm) (2)
6823 Bulkhead tie bars, front & rear, aluminum (blue-anodized)
6823G **Bulkhead tie bars, front & rear, aluminum (green-anodized)**
6823R **Bulkhead tie bars, front & rear, aluminum (red-anodized)**
6830X Bulkhead, front
3643X **Camber links, front (TUBES blue-anodized, 7075-T6 aluminum, stronger than titanium) (83mm) (2)/ rod ends (4)/ aluminum wrench (1) (#2579 3x15 BCS (4) required for installation)**
3643G **Camber links, front (TUBES green-anodized, 7075-T6 aluminum, stronger than titanium) (83mm) (2)/ rod ends (4)/ aluminum wrench (1) (#2579 3x15 BCS (4) required for installation)**
3643R **Camber links, front (TUBES red-anodized, 7075-T6 aluminum, stronger than titanium) (83mm) (2)/ rod ends (4)/ aluminum wrench (1) (#2579 3x15 BCS (4) required for installation)**
6832X **Caster blocks (c-hubs), 6061-T6 aluminum (blue-anodized), left & right**
6832G **Caster blocks (c-hubs), 6061-T6 aluminum (green-anodized), left & right**
6832A **Caster blocks (c-hubs), 6061-T6 aluminum (orange-anodized), left & right**
6832R **Caster blocks (c-hubs), 6061-T6 aluminum (red-anodized), left & right**
6832 Caster blocks (c-hubs), left & right
6845A **Drag link, machined 6061-T6 aluminum (blue-anodized)**
6845G **Drag link, machined 6061-T6 aluminum (green-anodized)**
6845T **Drag link, machined 6061-T6 aluminum (orange-anodized)**
6845R **Drag link, machined 6061-T6 aluminum (red-anodized)**
6895 **Linkage, front sway bar (2) (assembled with rod ends, hollow balls and ball studs)**
6897 **Linkage, rear sway bar (2) (assembled with rod ends, hollow balls and ball studs)**
6846 Linkage, steering (3x20mm turnbuckle) (1)/ rod ends (2)/ hollow balls (2)
3646 Screws, 3x15mm flat-head machine (hex drive) (6)
6839 Shock tower, front
6839X **Shock tower, front, 7075-T6 aluminum (blue-anodized)**
6845X Steering bellcranks/ servo saver/ servo saver spring/ servo spring retainer/servo horn, steering
6837X **Steering blocks, 6061-T6 aluminum (blue-anodized), left & right**
6837G **Steering blocks, 6061-T6 aluminum (green-anodized), left & right**
6837A **Steering blocks, 6061-T6 aluminum (orange-anodized), left & right**
6837R **Steering blocks, 6061-T6 aluminum (red-anodized), left & right**
6837 Steering blocks, left & right
6854A **Stub axle assembly, front, outer, extreme heavy duty (1) (left or right) (assembled with internal-splined half shaft)**
6854X Stub axles, front, heavy duty (2)/ yokes (2)/ pins (4)
3655P **Suspension arms, blue, front/rear (left & right), heavy duty (2)**
3655R **Suspension arms, front/rear (left & right), heavy duty (2)**
3655G **Suspension arms, green, front/rear (left & right), heavy duty (2)**
3655X Suspension arms, left & right
3655T **Suspension arms, orange, front/rear (left & right), heavy duty (2)**
3655L **Suspension arms, red, front/rear (left & right), heavy duty (2)**
3655A **Suspension arms, white, front/rear (left & right), heavy duty (2)**
6834 Suspension pin set, complete (front and rear)
6898 **Sway bar kit (front and rear) (includes front and rear sway bars and adjustable linkage)**
6742X **Toe links (TUBES blue-anodized, 7075-T6 aluminum, stronger than titanium) (87mm) (2)/ rod ends (4)/ aluminum wrench (1)**
6742G **Toe links (TUBES green-anodized, 7075-T6 aluminum, stronger than titanium) (87mm) (2)/ rod ends (4)/ aluminum wrench (1)**
6742R **Toe links (TUBES red-anodized, 7075-T6 aluminum, stronger than titanium) (87mm) (2)/ rod ends (4)/ aluminum wrench (1)**
3643 Turnbuckles, camber link, 49mm (82mm center to center) (assembled with rod ends and hollow balls) (1 left, 1 right)
5539 Turnbuckles, camber links, 58mm (assembled with rod ends and hollow balls) (2)
6896 **Wires, sway bar (front & rear, hard & soft) / 3x6 FCS (4)**

Hardware

1926 Antenna caps, vinyl (2)/ antenna spool
1726 Antenna, tube (1)/ vinyl antenna cap (1)/ wire retainer (1)
1552 Screws, 3x8mm cap-head machine (hex drive) (6)/washers (6)/ wrench
3935 Body clip (mounting clip), angled, 90-degrees (10)
3935A **Body clip (mounting clip), angled, 90-degrees (black) (10)**
3934 Body clips, heavy duty (12)
1589 Double-sided adhesive tape (25mm x 25mm) (2)
2586 Screws, 3x15mm cap-head machine (hex drive) (6)
2745 Nuts, 3mm nylon locking (12)
3647 Nuts, 4mm flanged nylon locking (steel, serrated) (8)
1747 Nuts, 4mm nylon locking (10)
1747A **Nuts, aluminum, flanged, serrated (4mm) (red-anodized) (4)**
1985 PTFE-coated washers, 5x8x0.5mm (20) (use with ball bearings)
5525 Rod ends (12)/ hollow balls (12)
2742X Rod ends, short (6)/ hollow balls (6)
3347 Screws, 2.5x5mm button-head machine (hex drive) (6)
3215 Screws, 2.5x6mm cap-head machine (hex drive) (6)
3965 Screws, 2.5x8mm cap-head machine (6)
2577 Screws, 3x10mm button-head machine (hex drive) (6)
2578 Screws, 3x12mm button-head machine (hex drive) (6)
2552 Screws, 3x12mm countersunk machine (6) (hex drive)
2579 Screws, 3x15mm button-head machine (hex drive) (6)
3646 Screws, 3x15mm flat-head machine (hex drive) (6)
2583 Screws, 3x18mm button-head machine (hex drive) (6)
2580 Screws, 3x20mm button-head machine (hex drive) (6)
2591 Screws, 3x23mm button-head machine (hex drive) (6)
2582 Screws, 3x30mm button-head machine (hex drive) (6)
2592 Screws, 3x40mm button-head machine (hex drive) (6)
2575 Screws, 3x6mm button-head machine (hex drive) (6)
2534 Screws, 3x6mm countersunk machine (6) (hex drive)
3932 Screws, 3x6mm flat-head machine (hex drive) (6)
2576 Screws, 3x8mm button-head machine (hex drive) (6)
3931 Screws, 3x8mm flat-head machine (hex drive) (6)
3937 Screws, 4x12mm button-head machine (hex drive) (6)
2542 Screws, 4x12mm countersunk machine (hex drive) (6)
2546 Screws, 4x15mm countersunk machine (hex drive) (6)
2743 Set (grub) screws, 3mm hardened (12)
3642X Shoulder screws, Ultra Shocks (3x12 hex drive) (6)
2754 Stub axle pins (4)
2748X Tool Set (1.5mm &2.5mm allens/ 4-way lug, 8mm &4mm wrench & U-joint wrenches)
2746 Washers, 3x6mm metal (12)

Motors & Electronics

1726 Antenna, tube (1)/ vinyl antenna cap (1)/ wire retainer (1)
2260 **BEC assembly (complete)**
3340 **Cooling fan, Velineon® VXL-3s ESC**
2072A Gear set (for 2070, 2075 servos)
2252 **Gear set, metal (for 2250, 2255 servos)**
3354R Motor cover, endbell (Velineon® 3500)
6860A Motor mount (assembled with 3x6 flat-head machine screw)/ 3.0mm NL (1)
6860R **Motor mount, 6061-T6 aluminum (blue-anodized)**
3351R Motor, Velineon® 3500, brushless (assembled with 12-gauge wire and gold-plated bullet connectors)
3352R Rebuild kit, Velineon® 3500 (includes plastic endbell, 5x11x4mm ball bearings (2), 2.5x5mm BCS (with threadlock) (4), rear bushing)
3347 Screws, 2.5x5mm button-head machine (hex drive) (6)
3932 Screws, 3x6mm flat-head machine (hex drive) (6)
2254 **Servo case, aluminum (blue-anodized) (middle) (for 2250 servo)**
2253 **Servo case, aluminum (red-anodized) (middle) (for 2255 servo)**
2251 **Servo case, plastic (top, middle, bottom)/ gaskets/ hardware (for 2250, 2255 servos)**
2074 Servo case/gaskets (for 2056 and 2075 waterproof servos)
2075R **Servo, digital high-speed, metal gear (ball bearing), waterproof**
2075 Servo, digital high-torque (ball bearing), waterproof
2250 **Servo, digital high-torque 330 coreless, metal gear (ball bearing), waterproof**
2255 **Servo, digital high-torque 400 brushless, metal gear (ball bearing), waterproof**
2075X **Servo, digital high-torque, metal gear (ball bearing), waterproof**

BFGoodrich® Tires Trademarks are used under license from Michelin Group Companies.

3350R Velineon® VXL-3s Brushless Power System, waterproof (includes VXL-3s waterproof ESC, Velineon 3500 motor, and speed control mounting plate (part #3725R))
3355R Velineon® VXL-3s Electronic Speed Control, waterproof (brushless) (fwd/rev/brake)

Radio System, Batteries & Chargers

2872X 5000mAh 11.1v 3-Cell 25C LiPo Battery
2857X 6400mAh 11.1v 3-Cell 25C LiPo Battery
2869X 7600mAh 7.4v 2-Cell 25C LiPo Battery
2976 AC to DC converter, 40W
2938X Adapter, Traxxas® iD® LiPo battery (adapts Traxxas iD batteries to separate balance ports)
2943 Battery charge indicators (green (4), blue (4), grey (4))
6548 Battery door, transmitter (replacement for #6516, 6517, 6528, 6529, 6530 transmitters)
2914 Battery, Power Cell AA Alkaline (4)
2923X Battery, Power Cell, 3000mAh (NiMH, 7-C flat, 8.4V)
2926X Battery, Power Cell, 3000mAh (NiMH, 7-C hump, 8.4V)
2940X Battery, Series 3 Power Cell, 3300mAh (NiMH, 7-C flat, 8.4V)
2941X Battery, Series 3 Power Cell, 3300mAh (NiMH, 7-C hump, 8.4V)
2950X Battery, Series 4 Power Cell, 4200mAh (NiMH, 7-C flat, 8.4V)
2951X Battery, Series 4 Power Cell, 4200mAh (NiMH, 7-C hump, 8.4V)
2960X Battery, Series 5 Power Cell, 5000mAh (NiMH, 7-C flat, 8.4V)
2961X Battery, Series 5 Power Cell, 5000mAh (NiMH, 7-C hump, 8.4V)
2983 Battery/charger completer pack (includes #2969 2-amp NiMH peak detecting AC charger (1), #2923X 3000mAh 8.4V 7-cell NiMH battery (1))
2992 Battery/charger completer pack (includes #2970 iD® charger (1), #2843X 5800mAh 7.4V 2-cell 25C LiPo battery (1))
2260 BEC assembly (complete)
2975 Charger, DC, 4 amp (6 - 7 cell, 7.2 - 8.4 volt, NiMH)
2972 Charger, EZ-Peak® Dual, 100W, NiMH/LiPo with iD® Auto Battery Identification
2973 Charger, EZ-Peak® Live Dual, 200W, NiMH/LiPo with iD® Auto Battery Identification
2971 Charger, EZ-Peak® Live, 100W, NiMH/LiPo with iD® Auto Battery Identification
2970 Charger, EZ-Peak® Plus, 4 amp, NiMH/LiPo with iD® Auto Battery Identification
6525 Communication link, telemetry expander
6541 Connector, power tap (with cable) (long)/ wire tie
6512 Cover plate, Traxxas Link™ Wireless Module
2978 Fuse, charger, 5A (2) (for #2974, 2975, 2977)
2072A Gear set (for 2070, 2075 servos)
2252 Gear set, metal (for 2250, 2255 servos)
2968X LiPo cell voltage checker/balancer (includes #2938X adapter for Traxxas® iD® batteries)
2968 LiPo cell voltage checker/balancer (requires #2938X adapter for Traxxas® iD® batteries)
6555 Mount, telemetry expander (fits Slash 4X4, Stampede® 4X4, Rally, Jato®)
6535 Mount, temperature sensor (electric motors)/ wire tie/ thermal pad
6533 Receiver, micro, TQi 2.4GHz with telemetry & TSM (5-channel)
3932 Screws, 3x6mm flat-head machine (hex drive) (6)
6552 Seal kit, expander box (includes o-ring, seals, and silicone grease)
6526 Sensor, auto-detectable, temperature
6527 Sensor, auto-detectable, voltage
6520 Sensor, RPM (long)/ 3x4mm BCS (2)/ 3x4 GS (1)
6521 Sensor, temperature and voltage (long)
2254 Servo case, aluminum (blue-anodized) (middle) (for 2250 servo)
2253 Servo case, aluminum (red-anodized) (middle) (for 2255 servo)
2251 Servo case, plastic (top, middle, bottom)/ gaskets/ hardware (for 2250, 2255 servos)
2074 Servo case/gaskets (for 2056 and 2075 waterproof servos)
2075R Servo, digital high-speed, metal gear (ball bearing), waterproof
2075 Servo, digital high-torque (ball bearing), waterproof
2250 Servo, digital high-torque 330 coreless, metal gear (ball bearing), waterproof
2255 Servo, digital high-torque 400 brushless, metal gear (ball bearing), waterproof
2075X Servo, digital high-torque, metal gear (ball bearing), waterproof
6553X Telemetry expander 2.0 and GPS module 2.0, TQi radio system
6550X Telemetry expander 2.0, TQi radio system (for use only with #6551X GPS module)
6551X Telemetry GPS module 2.0, TQi radio system (for use only with #6550X telemetry expander)
6539 Telemetry trigger magnet holder, center differential/ magnet, 5x2mm (1)/ 3x8mm BCS (3)
6538 Telemetry trigger magnet holders, spur gear/ magnet, 5x2mm (1)/ 3x8mm CCS (3)/ 3x10mm CCS (3)
6540 Telemetry trigger magnet, 5X2mm (1)
6509R TQi 2.4 GHz High Output radio system, 2-channel, Traxxas Link™ enabled, TSM (2-ch transmitter, 5-ch micro receiver)
6507R TQi 2.4 GHz High Output radio system, 4-channel with Traxxas Link™ Wireless Module, TSM (4-ch transmitter, 5-ch micro receiver)
6528 Transmitter, TQi Traxxas Link™ enabled, 2.4GHz high output, 2-channel (transmitter only)
6529 Transmitter, TQi Traxxas Link™ enabled, 2.4GHz high output, 3-channel (transmitter only)
6530 Transmitter, TQi Traxxas Link™ enabled, 2.4GHz high output, 4-channel (transmitter only)
6511 Traxxas Link™ Wireless Module
3355R Velineon® VXL-3s Electronic Speed Control, waterproof (brushless) (fwd/rev/brake)

Ready-To-Race Model

68086-4 Slash 4X4 VXL: 1/10 Scale 4WD Electric Short Course Truck with TQi Traxxas Link™ Enabled 2.4GHz Radio System & Traxxas Stability Management (TSM)®

Rear Suspension

6823 Bulkhead tie bars, front & rear, aluminum (blue-anodized)
6823G Bulkhead tie bars, front & rear, aluminum (green-anodized)
6823R Bulkhead tie bars, front & rear, aluminum (red-anodized)
6829 Bulkhead, rear
3644X Camber links, rear (TUBES blue-anodized, 7075-T6 aluminum, stronger than titanium) (73mm) (2)/ rod ends (4)/ aluminum wrench (1) (#2579 3x15 BCS (4) required for installation)
3644G Camber links, rear (TUBES green-anodized 7075-T6 aluminum, stronger than titanium) (73mm) (2)/ rod ends (4)/ aluminum wrench (1) (#2579 3x15 BCS (4) required for installation)
3644R Camber links, rear (TUBES red-anodized, 7075-T6 aluminum, stronger than titanium) (73mm) (2)/ rod ends (4)/ aluminum wrench (1) (#2579 3x15 BCS (4) required for installation)
1952X Carriers, stub axle (blue-anodized 6061-T6 aluminum) (rear) (2)
1952G Carriers, stub axle (green-anodized 6061-T6 aluminum) (rear) (2)
1952T Carriers, stub axle (orange-anodized 6061-T6 aluminum) (rear) (2)
1952 Carriers, stub axle (rear) (2)
1952A Carriers, stub axle (red-anodized 6061-T6 aluminum) (rear) (2)
6895 Linkage, front sway bar (2) (assembled with rod ends, hollow balls and ball studs)
6897 Linkage, rear sway bar (2) (assembled with rod ends, hollow balls and ball studs)
6838 Shock tower, rear
6838X Shock tower, rear, 7075-T6 aluminum (blue-anodized)
6853A Stub axle assembly, rear, outer, extreme heavy duty (1) (left or right) (assembled with internal-splined half shaft)
6853X Stub axles, rear, heavy duty (2)/pins (2)
3655P Suspension arms, blue, front/rear (left & right), heavy duty (2)
3655R Suspension arms, front/rear (left & right), heavy duty (2)
3655G Suspension arms, green, front/rear (left & right), heavy duty (2)
3655X Suspension arms, left & right
3655T Suspension arms, orange, front/rear (left & right), heavy duty (2)
3655L Suspension arms, red, front/rear (left & right), heavy duty (2)
3655A Suspension arms, white, front/rear (left & right), heavy duty (2)
6834 Suspension pin set, complete (front and rear)
6898 Sway bar kit (front and rear) (includes front and rear sway bars and adjustable linkage)
3644 Turnbuckles, camber link, 39mm (69mm center to center) (assembled with rod ends and hollow balls) (1 left, 1 right) (fits front & rear on Slash, rear on Slash 4X4)
6896 Wires, sway bar (front & rear, hard & soft) / 3x6 FCS (4)

Shocks (GTR)

7466X Body, GTR long (hard-anodized, PTFE-coated aluminum) (1)
7466 Body, GTR long shock, aluminum (blue-anodized) (PTFE-coated bodies) (1)
7466G Body, GTR long shock, aluminum (green-anodized) (PTFE-coated bodies) (1)
7466A Body, GTR long shock, aluminum (orange-anodized) (PTFE-coated bodies) (1)
7467X Body, GTR xx-long (hard-anodized, PTFE-coated aluminum) (1)
7467 Body, GTR xx-long shock, aluminum (blue-anodized) (PTFE-coated bodies) (1)
7467G Body, GTR xx-long shock, aluminum (green-anodized) (PTFE-coated bodies) (1)
7467A Body, GTR xx-long shock, aluminum (orange-anodized) (PTFE-coated bodies) (1)
7468X Caps & spring retainers, GTR shock (upper cap (2)/ hollow balls (4)/ bottom cap (2)/ upper retainer (2)/ lower retainer (2))

BFGoodrich® Tires Trademarks are used under license from Michelin Group Companies.

SLASH® 4X4 (68086-4)

7468	**Caps and spring retainers, GTR long/xx-long shock (upper cap (2)/ hollow balls (4)/ bottom cap (2)/ upper retainer (2)/ lower retainer (2))**
5475	**Multi-tool (plastic)**
5158	**Nuts, 2.5mm nylon locking (12)**
7463	**Rebuild kit, GTR long/xx-long shocks (x-rings, bladders, pistons, piston nuts, shock rod ends, hollow balls) (renews 2 shocks)**
5469	**Rod ends (GTR shocks) (6)**
7464T	**Shaft, GTR long, TiN-coated (2)**
7461	**Shocks, GTR long blue-anodized, PTFE-coated bodies with TiN shafts (fully assembled, without springs) (2)**
7461G	**Shocks, GTR long green-anodized, PTFE-coated bodies with TiN shafts (fully assembled, without springs) (2)**
7461X	**Shocks, GTR long hard-anodized, PTFE-coated bodies with TiN shafts (assembled) (2) (without springs)**
7462	**Shocks, GTR xx-long blue-anodized, PTFE-coated bodies with TiN shafts (fully assembled, without springs) (2)**
7462G	**Shocks, GTR xx-long green-anodized, PTFE-coated bodies with TiN shafts (fully assembled, without springs) (2)**
7462X	**Shocks, GTR xx-long hard-anodized, PTFE-coated bodies with TiN shafts (assembled) (2) (without springs)**
8459	**Spring retainers, lower (captured) (4)/ 2.5x10 CS (4)**
7440	**Spring, shock, white (GTR long) (0.623 rate orange) (1 pair)**
7441	**Spring, shock, white (GTR long) (0.653 rate green) (1 pair)**
7444	**Spring, shock, white (GTR long) (0.767 rate black) (1 pair)**
7445	**Spring, shock, white (GTR long) (0.810 rate pink) (1 pair)**
7448	**Spring, shock, white (GTR long) (0.892 rate blue) (1 pair)**
7442	**Spring, shock, white (GTR xx-long) (0.711 rate orange) (1 pair)**
7443	**Spring, shock, white (GTR xx-long) (0.762 rate green) (1 pair)**
7446	**Spring, shock, white (GTR xx-long) (0.874 rate black) (1 pair)**
7447	**Spring, shock, white (GTR xx-long) (0.884 rate pink) (1 pair)**
7449	**Spring, shock, white (GTR xx-long) (1.004 rate blue) (1 pair)**

Shocks (Pro-level Aluminum)

2664	**Big Bore shock cylinder (long) (1)**
2666	**Big Bore shock cylinder (XX-long) (1)**
5862	**Big Bore shocks (hard-anodized & PTFE-coated T6 aluminum) (assembled with TiN shafts and springs) (front & rear) (4)**
2660	**Big Bore shocks (long) (hard-anodized & PTFE-coated T6 aluminum) (assembled with TiN shafts) w/o springs (front) (2)**
2662	**Big Bore shocks (XX-long) (hard-anodized & PTFE-coated T6 aluminum) (assembled with TiN shafts) w/o springs (rear) (2)**
2669	**Piston head set (2-hole (2)/ 3-hole (2))/ shock mounting bushings & washers (2) (Big Bore Shocks)**
2362	**Rebuild kit, Ultra shocks (for 2 shocks)**
1942	Rod ends (16 long & 4 short)/ hollow ball connectors (18)/ ball screws (2)
2742X	Rod ends, short (6)/ hollow balls (6)
2667	**Shock caps, aluminum (Big Bore Shocks) (2)**
1664T	**Shock shafts, hardened steel, titanium nitride coated (long) (2)**
2656T	**Shock shafts, hardened steel, titanium nitride coated (xx-long) (2)**
1664	Shock shafts, steel, chrome finish (long) (2)
2656	Shock shafts, steel, chrome finish (xx-long) (2)
1765	Silicone diaphragms (4)
1666	Silicone shock oil (30 wt)
2668	**Spring retainers, upper & lower (2)/ spring pre-load spacers: 1mm (4)/ 1.5mm (2)/ 2mm (2)/ 4mm (2)/ 8mm (2) (Big Bore Shocks)**
6863	**Springs, front (progressive, +10% rate, pink) (2)**
6864	**Springs, front (progressive, +20% rate, blue) (2)**
6862	**Springs, front (progressive, -10% rate, green) (2)**
6861	**Springs, front (progressive, -20% rate, orange) (2)**
6857	Springs, front (white) (progressive rate) (2)
6867	**Springs, rear (progressive, +10% rate, pink) (2)**
6868	**Springs, rear (progressive, +20% rate, blue) (2)**
6866	**Springs, rear (progressive, -10% rate, green) (2)**
6865	**Springs, rear (progressive, -20% rate, orange) (2)**
6858	Springs, rear (white) (progressive rate) (2)

Shocks (Ultra Shocks)

3642	Attachment screws, shock (3x12mm shoulder screws) (6)
3765A	Body, Ultra Shock(s) (long) (grey) (2)
3766A	Body, Ultra Shock(s) (XXL) (grey) (2)
2362	Rebuild kit, Ultra shocks (for 2 shocks)
1942	Rod ends (16 long & 4 short)/ hollow ball connectors (18)/ ball screws (2)
2742X	Rod ends, short (6)/ hollow balls (6)
3767	Shock caps (2)/ shock bottoms (2)
3767A	**Shock caps, aluminum (blue-anodized) (4) (fits all Ultra Shocks)**
3767G	**Shock caps, aluminum (green-anodized) (4) (fits all Ultra Shocks)**
3767P	**Shock caps, aluminum (pink-anodized) (4) (fits all Ultra Shocks)**
3767X	**Shock caps, aluminum (red-anodized) (4) (fits all Ultra Shocks)**
1664T	**Shock shafts, hardened steel, titanium nitride coated (long) (2)**
2656T	**Shock shafts, hardened steel, titanium nitride coated (xx-long) (2)**
1664	Shock shafts, steel, chrome finish (long) (2)
2656	Shock shafts, steel, chrome finish (xx-long) (2)
1765	Silicone diaphragms (4)
1666	Silicone shock oil (30 wt)
3769	Spring pre-load spacers: 1mm (4)/ 2mm (2)/ 4mm (2)/ 8mm (2)
3768	Spring retainers, upper & lower (2)/ piston head set (2-hole (2)/ 3-hole (2))
6863	**Springs, front (progressive, +10% rate, pink) (2)**
6864	**Springs, front (progressive, +20% rate, blue) (2)**
6862	**Springs, front (progressive, -10% rate, green) (2)**
6861	**Springs, front (progressive, -20% rate, orange) (2)**
6857	Springs, front (white) (progressive rate) (2)
6867	**Springs, rear (progressive, +10% rate, pink) (2)**
6868	**Springs, rear (progressive, +20% rate, blue) (2)**
6866	**Springs, rear (progressive, -10% rate, green) (2)**
6865	**Springs, rear (progressive, -20% rate, orange) (2)**
6858	Springs, rear (white) (progressive rate) (2)
3760	**Ultra Shocks (black) (long) (complete w/ spring pre-load spacers & springs) (front) (2)**
3762	**Ultra Shocks (black) (xx-long) (complete w/ spring pre-load spacers & springs) (rear) (2)**
3760A	Ultra Shocks (grey) (long) (complete w/ spring pre-load spacers & springs) (2)
3762A	Ultra Shocks (grey) (xx-long) (complete w/ spring pre-load spacers & springs) (rear) (2)

Slipper Clutch Components

5119A	Ball bearings, black rubber sealed (10x15x4mm) (2)
6893G	**Bearing adapter, 6061-T6 aluminum (green-anodized) (1)/ 10x15x4mm ball bearing (black rubber sealed) (1) (for slipper shaft)**
6893X	**Bearing adapter, 6160-T6 aluminum (blue-anodized) (1)/10x15x4mm ball bearing (blue rubber sealed) (1) (for slipper shaft)**
6814	**Differential kit, center (complete)**
6888	Drive hub, center, rear (1)/ 4x3 GS (1)
6888X	Drive hub, front, hardened steel (1)/ screw pin (1)
6883	**Gear set, center differential (output gears (2)/ spider gears (2)/ spider gear shaft)**
6884	**Housing, center differential/ x-ring gaskets (2)/ ring gear gasket/ bushings (2)/ 5x10x0.5 TW (2)/ CCS 2.5x8 (4)**
6893	Input shaft (slipper shaft)/ bearing adapter (1)/pin (1)
5352R	**Rebuild kit (heavy duty), slipper clutch (steel disc/ aluminum friction pads (3)/ spring (1)/ 2x9.8mm pin/ 5x8mm MW/ 5.0mm NL (1)/ 4.0mm NL (1))**
5352X	**Rebuild kit, slipper clutch (steel disc/ friction pads (3)/ spring (2)/ 2x9.8mm pin/ 5x8mm MW/ 5.0mm NL (1)/ 4.0mm NL (1))**
5552X	Rebuild kit, slipper clutch (steel disc/ friction pads (3)/ spring (2)/ pin/ 4.0mm NL (1)/ 5.0mm NL (1))
2554	Screws, 3x6mm cap-head machine (hex drive) (6)
6878	Slipper clutch, complete
5556	Slipper pressure plate & hub (aluminum alloy)
5351	**Slipper pressure plate and hub (alloy)**

Spur Gears & Pinion Gears

3942X	**Gear, 12-T pinion (32-p), heavy duty (machined, hardened steel)/ set screw**
3943X	**Gear, 13-T pinion (32-p), heavy duty (machined, hardened steel)/ set screw**
3944X	**Gear, 14-T pinion (32-p), heavy duty (machined, hardened steel)/ set screw**
3945X	**Gear, 15-T pinion (32-p), heavy duty (machined, hardened steel)/ set screw**
3946X	**Gear, 16-T pinion (32-p), heavy duty (machined, hardened steel)/ set screw**
3947X	**Gear, 17-T pinion (32-p), heavy duty (machined, hardened steel)/ set screw**
3948X	**Gear, 18-T pinion (32-p), heavy duty (machined, hardened steel)/ set screw**
3949X	**Gear, 19-T pinion (32-p), heavy duty (machined, hardened steel)/ set screw**
3950X	**Gear, 20-T pinion (32-p), heavy duty (machined, hardened steel)/ set screw**
3951X	**Gear, 21-T pinion (32-p), heavy duty (machined, hardened steel)/ set screw**
3952X	**Gear, 22-T pinion (32-p), heavy duty (machined, hardened steel)/ set screw**
6842	**Spur gear, 50-tooth (0.8 metric pitch, compatible with 32-pitch)**
6842R	**Spur gear, 50-tooth (0.8 metric pitch, compatible with 32-pitch) (for center differential)**
6843	**Spur gear, 52-tooth (0.8 metric pitch, compatible with 32-pitch)**

BFGoodrich® Tires Trademarks are used under license from Michelin Group Companies.

6843R **Spur gear, 52-tooth (0.8 metric pitch, compatible with 32-pitch) (for center differential)**
3956 Spur gear, 54-tooth (0.8 metric pitch, compatible with 32-pitch)
3956R **Spur gear, 54-tooth (0.8 metric pitch, compatible with 32-pitch) (requires #6814 center differential)**
3956X **Spur gear, steel, 54-tooth (0.8 metric pitch, compatible with 32-pitch) (requires #6780 center differential)**

Steering Components

1552 Screws, 3x8mm cap-head machine (hex drive) (6)/washers (6)/ wrench
2728 Ball bearings (5x8x2.5mm) (2)
6845A **Drag link, machined 6061-T6 aluminum (blue-anodized)**
6845G **Drag link, machined 6061-T6 aluminum (green-anodized)**
6845T **Drag link, machined 6061-T6 aluminum (orange-anodized)**
6845R **Drag link, machined 6061-T6 aluminum (red-anodized)**
6846 Linkage, steering (3x20mm turnbuckle) (1)/ rod ends (2)/ hollow balls (2)
2742 Rod ends, long (6)/ hollow ball connectors (6)
6845X Steering bellcranks/ servo saver/ servo saver spring/ servo spring retainer/servo horn, steering
6742X **Toe links (TUBES blue-anodized, 7075-T6 aluminum, stronger than titanium) (87mm) (2)/ rod ends (4)/ aluminum wrench (1)**
6742G **Toe links (TUBES green-anodized, 7075-T6 aluminum, stronger than titanium) (87mm) (2)/ rod ends (4)/ aluminum wrench (1)**
6742R **Toe links (TUBES red-anodized, 7075-T6 aluminum, stronger than titanium) (87mm) (2)/ rod ends (4)/ aluminum wrench (1)**
2746 Washers, 3x6mm metal (12)

Suspension Linkage

3643X **Camber links, front (TUBES blue-anodized, 7075-T6 aluminum, stronger than titanium) (83mm) (2)/ rod ends (4)/ aluminum wrench (1) (#2579 3x15 BCS (4) required for installation)**
3643G **Camber links, front (TUBES green-anodized, 7075-T6 aluminum, stronger than titanium) (83mm) (2)/ rod ends (4)/ aluminum wrench (1) (#2579 3x15 BCS (4) required for installation)**
3643R **Camber links, front (TUBES red-anodized, 7075-T6 aluminum, stronger than titanium) (83mm) (2)/ rod ends (4)/ aluminum wrench (1) (#2579 3x15 BCS (4) required for installation)**
3644X **Camber links, rear (TUBES blue-anodized, 7075-T6 aluminum, stronger than titanium) (73mm) (2)/ rod ends (4)/ aluminum wrench (1) (#2579 3x15 BCS (4) required for installation)**
3644G **Camber links, rear (TUBES green-anodized 7075-T6 aluminum, stronger than titanium) (73mm) (2)/ rod ends (4)/ aluminum wrench (1) (#2579 3x15 BCS (4) required for installation)**
3644R **Camber links, rear (TUBES red-anodized, 7075-T6 aluminum, stronger than titanium) (73mm) (2)/ rod ends (4)/ aluminum wrench (1) (#2579 3x15 BCS (4) required for installation)**
5525 Rod ends (12)/ hollow balls (12)
3739 Screw pin set (Rustler®/ Bandit/ Stampede®)
6834 Suspension pin set, complete (front and rear)
2537 Threaded rods (20/25/44mm 1 ea.)/ (1) 12mm set screw
3644 Turnbuckles, camber link, 39mm (69mm center to center) (assembled with rod ends and hollow balls) (1 left, 1 right) (fits front & rear on Slash)
3643 Turnbuckles, camber link, 49mm (82mm center to center) (assembled with rod ends and hollow balls) (1 left, 1 right)
5539 Turnbuckles, camber links, 58mm (assembled with rod ends and hollow balls) (2)

Team Traxxas Items

2514 **Decal sheet, racing sponsors**
6160X **DVD, Maxx® Power! Full Throttle Action (sleeve)**
9950 **Official Team Traxxas® racing decal set (flag logo/ 6-color)**
9909 **Traxxas® racing banner, red & black (3x7 feet)**

Tires & Wheels

5116 Ball bearings, blue rubber sealed (5x11x4mm) (2)
5854 **Hub retainer, 17mm hubs, M4 X 0.7 (4) (use with #5853X, #6856X, #6469)**
3647 Nuts, 4mm flanged nylon locking (steel, serrated) (8)
1985 PTFE-coated washers, 5x8x0.5mm (20) (use with ball bearings)
1647 Silicone grease
2754 Stub axle pins (4)
5883A **Tire & wheel assy, glued (SCT Split-Spoke, black, blue beadlock wheels, BFGoodrich® Mud-Terrain™ T/A® KM2 tire, inserts) (2) (4WD f/r, 2WD rear)**
5880X **Tires & wheels, assembled, glued (SCT satin chrome, beadlock style wheels, Kumho tires, foam inserts) (2) (4WD front/rear, 2WD rear only)**
5887R **Tires & wheels, assembled, glued (S1 compound) (SCT chrome wheels, red beadlock style, dual profile (2.2" outer, 3.0" inner), SCT off-road racing tires, foam inserts) (2) (4WD f/r, 2WD rear) (TSM rated)**
5889R **Tires & wheels, assembled, glued (S1 compound) (SCT Split-Spoke black, satin chrome beadlock style wheel, dual profile (2.2" outer, 3.0" inner), SCT off-road racing tires, foam inserts) (2) (4WD f/r, 2WD rear) (TSM rated)**
6891R **Tires & wheels, assembled, glued (S1 compound) (SCT Split-Spoke chrome, red beadlock style wheels, dual profile (2.2" outer, 3.0" inner), SCT off-road racing tires, foam inserts) (2) (4WD f/r, 2WD rear) (TSM rated)**
6892R **Tires & wheels, assembled, glued (S1 compound) (SCT Split-Spoke satin chrome, black beadlock style wheels, dual profile (2.2" outer, 3.0" inner), SCT off-road racing tires, foam inserts) (2) (4WD f/r, 2WD rear) (TSM rated)**
5863R **Tires & wheels, assembled, glued (S1 compound) (SCT, black, orange beadlock wheels, dual profile (2.2" outer, 3.0" inner), SCT off-road racing tires, foam inserts) (2) (4WD f/r, 2WD rear) (TSM® rated)**
6873X **Tires & wheels, assembled, glued (S1 ultra-soft off-road racing compound) (SCT Split-Spoke satin chrome, black beadlock style wheels, BFG Mud-Terrain tires, foam inserts) (2) (4WD front/rear, 2WD rear only)**
6874R **Tires & wheels, assembled, glued (S1 ultra-soft off-road racing compound) (SCT Split-Spoke satin chrome, black beadlock style wheels, Kumho tires, foam inserts) (2) (4WD front/rear, 2WD rear only)**
6873R **Tires & wheels, assembled, glued (S1 ultra-soft, off-road racing compound) (SCT Split-Spoke chrome, red beadlock style wheels, BFGoodrich® Mud-Terrain™ T/A® KM2 tires, foam inserts) (2) (4WD f/r, 2WD rear)**
5863 **Tires & wheels, assembled, glued (SCT black, orange beadlock wheels, dual profile (2.2" outer, 3.0" inner), SCT off-road racing tire, foam inserts) (2) (4WD f/r, 2WD rear) (TSM® rated)**
5887 **Tires & wheels, assembled, glued (SCT chrome wheels, red beadlock style, dual profile (2.2" outer, 3.0" inner), SCT off-road racing tires, foam inserts) (2) (4WD f/r, 2WD rear) (TSM rated)**
5867 **Tires & wheels, assembled, glued (SCT chrome, red beadlock style wheels, BFGoodrich® Mud-Terrain™ T/A® KM2 tires, foam inserts) (2)(4WD front/rear, 2WD rear only)**
5873R **Tires & wheels, assembled, glued (SCT satin chrome red beadlock wheels, ultra-soft S1 compound off-road racing tires, inserts) (2) (2WD rear, 4WD f/r)**
5873 **Tires & wheels, assembled, glued (SCT satin chrome, beadlock style wheels, SCT off-road racing tires, foam inserts) (2) (4WD front/rear, 2WD rear only) (TSM rated)**
5878 **Tires & wheels, assembled, glued (SCT satin chrome, black beadlock style wheels, BFGoodrich® Mud-Terrain™ T/A® KM2 tires, foam inserts) (2)(4WD front/rear, 2WD rear only)**
5873X **Tires & wheels, assembled, glued (SCT satin chrome, black beadlock style wheels, SCT off-road racing tires, foam inserts) (2) (4WD front/rear, 2WD rear only)**
5873A **Tires & wheels, assembled, glued (SCT satin chrome, red-beadlock style wheels, SCT off-road tires, foam inserts) (2) (4WD front/rear, 2WD rear only)**
6873T **Tires & wheels, assembled, glued (SCT Split-Spoke black chrome beadlock style wheels, BFGoodrich® Mud-Terrain™ T/A® KM2 ultra-soft S1 compound off-road racing tires, foam inserts) (2) (4WD f/r, 2WD rear) (TSM® rated)**
5889 **Tires & wheels, assembled, glued (SCT Split-Spoke black, satin chrome beadlock style wheel, dual profile (2.2" outer, 3.0" inner), SCT off-road racing tires, foam inserts) (2) (4WD f/r, 2WD rear) (TSM rated)**
6873A **Tires & wheels, assembled, glued (SCT Split-Spoke chrome, red beadlock style wheels, BFGoodrich® Mud-Terrain™ T/A® KM2 tires, foam inserts) (2) (4WD f/r, 2WD rear)**
6891 **Tires & wheels, assembled, glued (SCT Split-Spoke chrome, red beadlock style wheels, dual profile (2.2" outer, 3.0" inner), SCT off-road racing tires, foam inserts) (2) (4WD f/r, 2WD rear) (TSM rated)**
5892G **Tires & wheels, assembled, glued (SCT Split-Spoke green wheels, SCT off-road racing tires, foam inserts) (2) (4WD f/r, 2WD rear) (TSM rated)**
5892 **Tires & wheels, assembled, glued (SCT Split-Spoke orange wheels, SCT off-road racing tires, foam inserts) (2) (4WD f/r, 2WD rear) (TSM rated)**
5891 **Tires & wheels, assembled, glued (SCT Split-Spoke satin chrome, beadlock style wheels, paddle tires, foam inserts) (2) (4WD front/rear, 2WD rear only) (TSM rated)**
6873 **Tires & wheels, assembled, glued (SCT Split-Spoke satin chrome, black beadlock style wheels, BFGoodrich® Mud-Terrain™ T/A® KM2 tires, foam inserts) (2) (4WD f/r, 2WD rear) (TSM® rated)**
6892 **Tires & wheels, assembled, glued (SCT Split-Spoke satin chrome, black beadlock style wheels, dual profile (2.2" outer, 3.0" inner), SCT off-road racing tires, foam inserts) (2) (4WD f/r, 2WD rear) (TSM rated)**

BFGoodrich® Tires Trademarks are used under license from Michelin Group Companies.

SLASH® 4X4 (68086-4)

5883	**Tires & wheels, assembled, glued (SCT Split-Spoke, black, satin chrome beadlock wheels, BFGoodrich® Mud-Terrain™ T/A® KM2 tire, foam inserts) (2) (4WD f/r, 2WD rear)**
6876	**Tires & wheels, assembled, glued (SCT, chrome, green beadlock wheel, BFGoodrich® Mud-Terrain™ T/A® KM2 tire, foam inserts) (2) (4WD front/rear, 2WD rear only)**
6871	Tires, BFGoodrich® Mud-Terrain T/A® KM2 (dual profile 4.3x1.7-2.2/3.0") (2)/ foam inserts (2)
6871R	**Tires, BFGoodrich® Mud-Terrain T/A® KM2 , ultra-soft (S1 off-road racing compound) (dual profile 4.3x1.7- 2.2/3.0") (2)/ foam inserts (2)**
5871	Tires, off-road racing, SCT dual profile 4.3x1.7- 2.2/3.0" (2)/ foam inserts (2)
5871R	**Tires, ultra-soft, S1 compound for off-road racing, SCT dual profile 4.3x1.7- 2.2/3.0" (2)/ foam inserts (2)**
1654	Wheel hubs, hex (rear) (2)/ stub axle pins (2)
1654X	**Wheel hubs, hex (blue-anodized, lightweight aluminum) (2)/ axle pins(4)**
6856X	**Wheel hubs, splined, 17mm, short (4)/ wheel nuts, splined, 17mm (4) (blue-anodized)/ hub retainer M4 X 0.7 (4)/ axle pin (4)/ wrench, 5mm**
5353	**Wheel nuts, splined, 17mm (blue-anodized) (4)**
5480X	**Wheel wrench, splined, 17mm**
5868X	**Wheels, SCT black, orange beadlock style, dual profile (2.2" outer, 3.0" inner) (4WD f/r, 2WD rear) (2)**
5868	**Wheels, SCT chrome, red beadlock style, dual profile (2.2" outer, 3.0" inner) (4WD front/rear, 2WD rear only) (2)**
5872	**Wheels, SCT satin chrome, beadlock style, dual profile (2.2" outer, 3.0" inner) (4WD front/rear, 2WD rear only)**
5872X	**Wheels, SCT satin chrome, black beadlock style SCT, dual profile (2.2" outer, 3.0" inner) (4WD front/rear, 2WD rear only) (2)**
5872A	**Wheels, SCT satin chrome, red beadlock style, dual profile (2.2" outer, 3.0" inner) (4WD front/rear, 2WD rear only) (2)**
5884A	**Wheels, SCT Split-Spoke, black, blue beadlock style, dual profile (2.2" outer, 3.0" inner) (4WD f/r, 2WD rear) (2)**
5884	**Wheels, SCT Split-Spoke, black, satin chrome beadlock style, dual profile (2.2" outer, 3.0" inner) (4WD f/r, 2WD rear) (2)**
6872X	Wheels, SCT Split-Spoke, chrome, green beadlock style, dual profile (2.2" outer, 3.0" inner) (4WD front/rear, 2WD rear) (2)
6872A	Wheels, SCT Split-Spoke, chrome, red beadlock style, dual profile (2.2" outer, 3.0" inner) (4WD front/rear, 2WD rear) (2)
6872	Wheels, SCT Split-Spoke, satin chrome, black beadlock style, dual profile (2.2" outer, 3.0" inner) (4WD front/rear, 2WD rear only) (2)

Traxxas Tools

3433X	**Body reamer (aluminum handle)**
3433	**Body reamer (plastic handle)**
3436	**Cap, body reamer**
3432	**Scissors, curved tip**
3431	**Scissors, straight tip**
8712	**Speed Bit Essentials Set, hex and nut driver, 7-piece, includes premium handle (medium), travel pouch, hex drivers (straight: 1.5mm, 2.0mm, 2.5mm) and nut drivers (5.0mm, 5.5mm, 7.0mm, and 8.0mm), 1/4" drive**
8721	**Speed bit handle, medium (one piece)**
8720	**Speed bit handle, premium, large (rubber overmold)**
8722	**Speed bit handle, premium, medium (rubber overmold)**
8710	**Speed Bit Master Set, hex and nut driver, 13-piece, includes premium handle (medium), travel pouch, hex drivers (straight: 1.5mm, 2.0mm, 2.5mm, 3.0mm), (ball-end: 2.0mm, 2.5mm, 3.0mm), and nut drivers (4.00mm, 4.50mm, 5.00mm, 5.50mm, 7.00mm, 8.00mm),**
8711	**Speed Bit Master Set, hex driver, 7-piece straight and ball end, includes premium handle (medium), travel pouch, hex drivers (straight: 1.5mm, 2.0mm, 2.5mm, 3.0mm) (ball end: 2.0mm, 2.5mm, 3.0mm), 1/4" drive**
8719	**Speed Bit Master Set, nut driver, 6-piece, includes premium handle (medium), travel pouch, and nut drivers (4.0mm, 4.5mm, 5.0mm, 5.5mm, 7.0mm, 8.0mm), 1/4" drive**
8716	**Speed Bit Set, hex driver, 2-piece ball-end (2.0mm, 2.5mm), 1/4" drive**
8716X	**Speed Bit Set, hex driver, 3-piece ball-end (2.0mm, 2.5mm, 3.0mm), 1/4" drive**
8715	**Speed Bit Set, hex driver, 3-piece straight (1.5mm, 2.0mm, 2.5mm), 1/4" drive**
8715X	**Speed Bit Set, hex driver, 4-piece straight (1.5mm, 2.0mm, 2.5mm, 3.0mm), 1/4" drive**
3415	**Tool set with pouch (includes 1.5mm, 2.0mm, 2.5mm, 3.0mm, 3.5mm, 4mm drivers/ 4mm, 5mm, 5.5mm, 7mm and 8mm nut drivers/ 2mm, 4mm, and 5mm slotted screwdrivers/ #00 Phillips, #0 Phillips, and #1 Phillips screwdrivers/ 4mm and 8mm wrench/ driver handle**

Turnbuckles & Threaded Rods

3643X	**Camber links, front (TUBES blue-anodized, 7075-T6 aluminum, stronger than titanium) (83mm) (2)/ rod ends (4)/ aluminum wrench (1) (#2579 3x15 BCS (4) required for installation)**
3643G	**Camber links, front (TUBES green-anodized, 7075-T6 aluminum, stronger than titanium) (83mm) (2)/ rod ends (4)/ aluminum wrench (1) (#2579 3x15 BCS (4) required for installation)**
3643R	**Camber links, front (TUBES red-anodized, 7075-T6 aluminum, stronger than titanium) (83mm) (2)/ rod ends (4)/ aluminum wrench (1) (#2579 3x15 BCS (4) required for installation)**
3644X	**Camber links, rear (TUBES blue-anodized, 7075-T6 aluminum, stronger than titanium) (73mm) (2)/ rod ends (4)/ aluminum wrench (1) (#2579 3x15 BCS (4) required for installation)**
3644G	**Camber links, rear (TUBES green-anodized 7075-T6 aluminum, stronger than titanium) (73mm) (2)/ rod ends (4)/ aluminum wrench (1) (#2579 3x15 BCS (4) required for installation)**
3644R	**Camber links, rear (TUBES red-anodized, 7075-T6 aluminum, stronger than titanium) (73mm) (2)/ rod ends (4)/ aluminum wrench (1) (#2579 3x15 BCS (4) required for installation)**
5525	Rod ends (12)/ hollow balls (12)
6742X	**Toe links (TUBES blue-anodized, 7075-T6 aluminum, stronger than titanium) (87mm) (2)/ rod ends (4)/ aluminum wrench (1)**
6742G	**Toe links (TUBES green-anodized, 7075-T6 aluminum, stronger than titanium) (87mm) (2)/ rod ends (4)/ aluminum wrench (1)**
6742R	**Toe links (TUBES red-anodized, 7075-T6 aluminum, stronger than titanium) (87mm) (2)/ rod ends (4)/ aluminum wrench (1)**
3644	Turnbuckles, camber link, 39mm (69mm center to center) (assembled with rod ends and hollow balls) (1 left, 1 right) (fits front & rear on Slash)
3643	Turnbuckles, camber link, 49mm (82mm center to center) (assembled with rod ends and hollow balls) (1 left, 1 right)
5539	Turnbuckles, camber links, 58mm (assembled with rod ends and hollow balls) (2)

If you have questions or need technical assistance, call Traxxas at:

1-888-TRAXXAS

(1-888-872-9927) (U.S. residents only)

For orders, calls outside the U.S., and other information, call 972-549-3000, or fax to 972-549-3011 e-mail Traxxas at support@Traxxas.com

TRAXXAS.COM

BFGoodrich® Tires Trademarks are used under license from Michelin Group Companies.

REV. 201002 1233

HOSS 4X4 VXL

MODEL 90076-4

1/10 SCALE 4WD BRUSHLESS MONSTER TRUCK



60+ mph*

SLEDGEHAMMER TIRES AND BLACK CHROME WHEELS

VXL-3S VELINEON BRUSHLESS POWER SYSTEM

TQi 2.4GHz TRANSMITTER COMPATIBLE WITH TRAXXAS LINK WIRELESS MODULE

MEET THE ALL-NEW HOSS 4X4 VXL

The all-new Hoss 4X4 VXL unleashes extreme monster truck fun with the speed and style only Traxxas can deliver. Grab a fistful of throttle and the Velineon 540XL motor delivers massive torque to wheelie on command and hold the front end high as long as you dare. Pitch the Hoss into a turn and slide through sideways in a cloud of dirt—all four tires dig in and drive hard no matter how rough the terrain, and the Traxxas Stability Management system keeps you in control. The rugged, reinforced pickup body covers proven performance tech, with Velineon brushless horsepower and heavy-duty shaft-driven 4WD. The Hoss delivers unmatched versatility as the aggressive Sledgehammer™ tires blast through dirt, sand, mud, and snow. Drive harder, go faster, hang tougher—legendary Traxxas durability is engineered into every component. Nothing stops the Hoss!

*With 3S LiPo battery (sold separately) and optional gearing

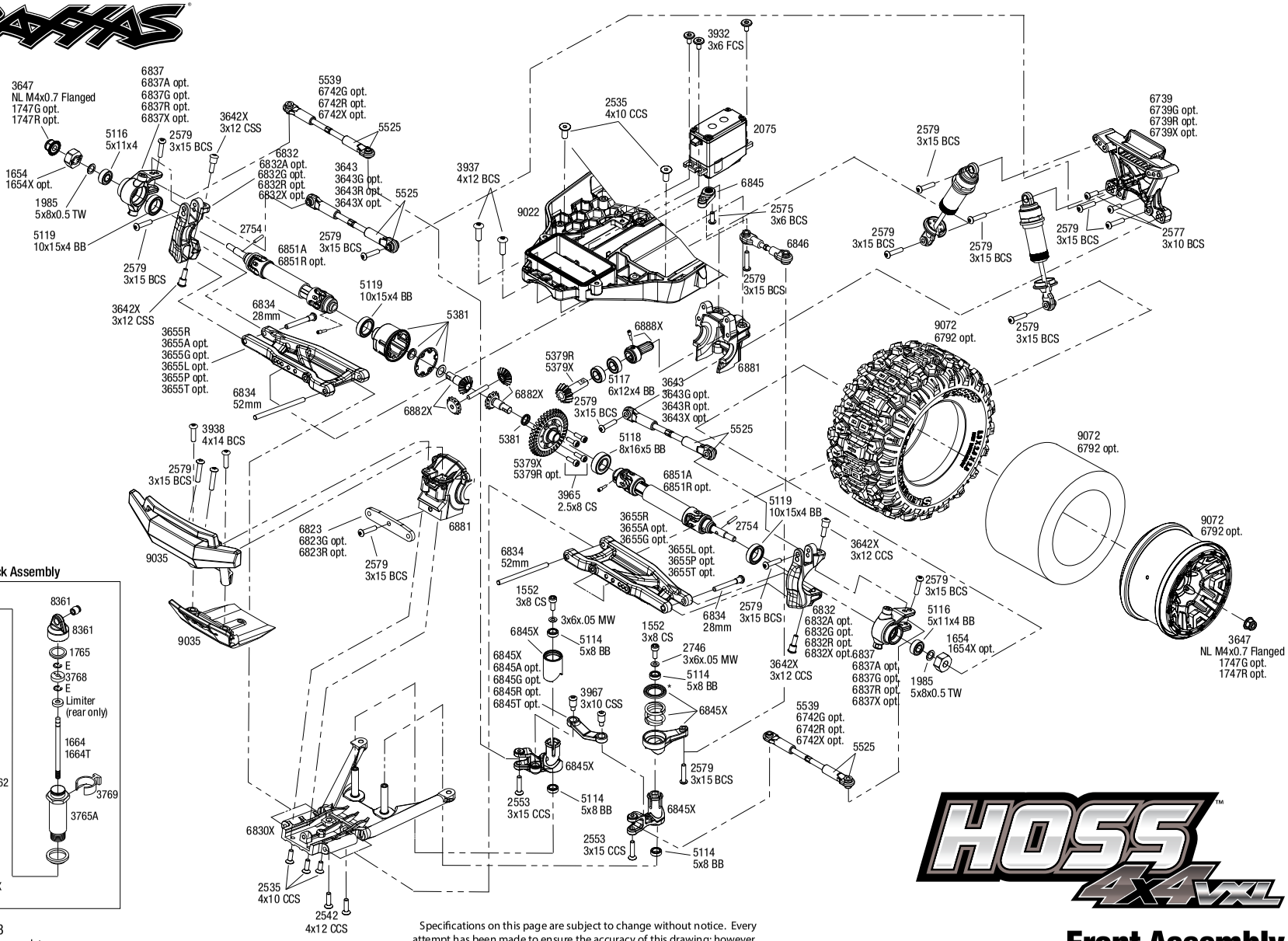

Shock Assembly

REV 200922-R03
See Parts List for a complete listing of optional accessories.

Specifications on this page are subject to change without notice. Every attempt has been made to ensure the accuracy of this drawing; however, Traxxas cannot be held responsible for typographical or other errors.

HOSS 4X4 VXL

Front Assembly

HOSS 4X4 VXL (90076-4)

Chassis Assembly

See Parts List for a complete listing of optional accessories.

REV 200922-R03

Specifications on this page are subject to change without notice. Every attempt has been made to ensure the accuracy of this drawing; however, Traxxas cannot be held responsible for typographical or other errors.

HOSS 4X4 VXL

Rear Assembly

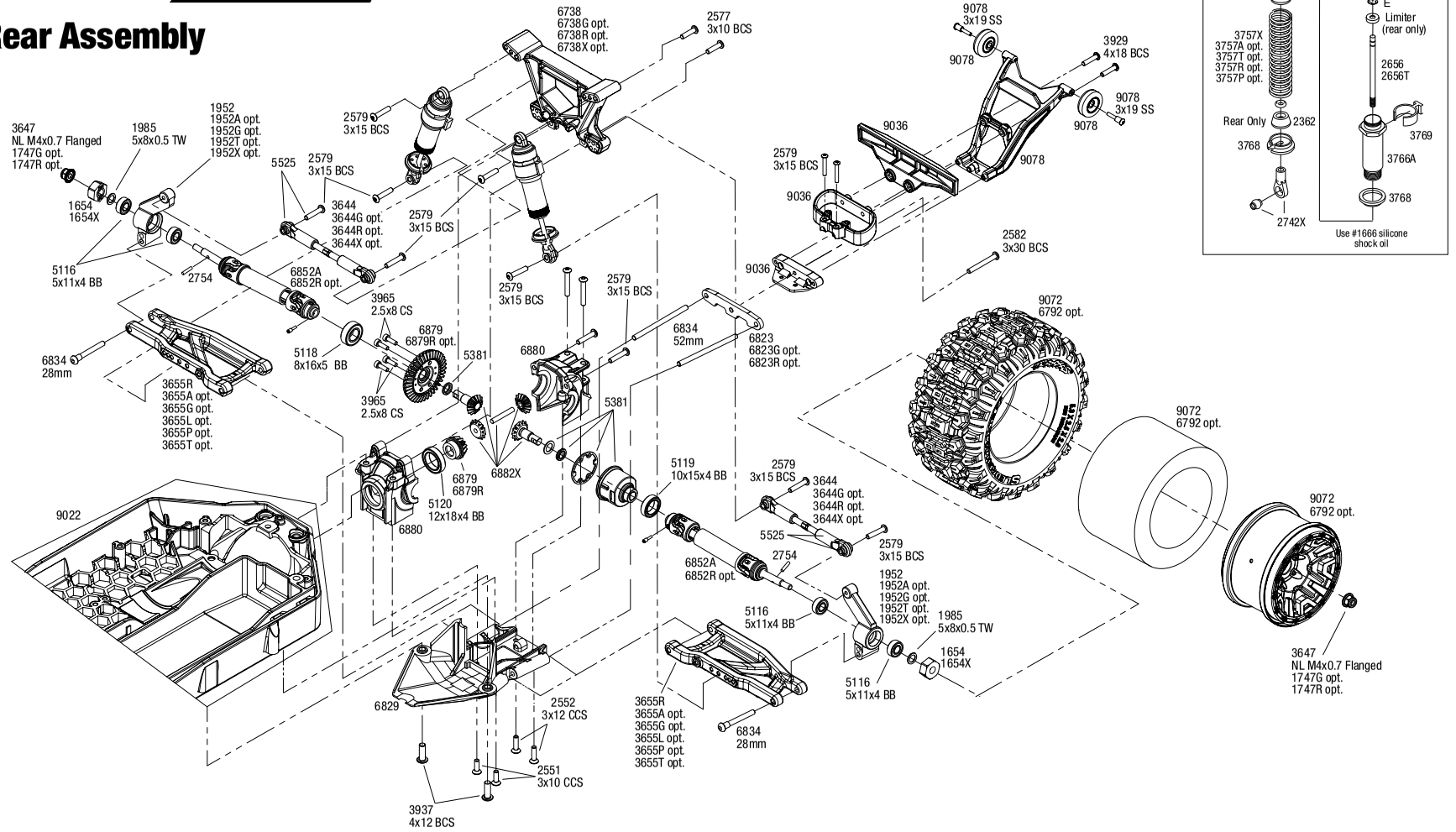

See Parts List for a complete listing of optional accessories.

REV 200922-R03

Specifications on this page are subject to change without notice. Every attempt has been made to ensure the accuracy of this drawing; however, Traxxas cannot be held responsible for typographical or other errors.

HOSS 4X4 VXL (90076-4)

EXPLODED VIEWS

REV 200922-R03

Specifications on this page are subject to change without notice. Every attempt has been made to ensure the accuracy of this drawing; however, Traxxas cannot be held responsible for typographical or other errors.

See Parts List for a complete listing of optional accessories.

Transmission Assembly

Questions? **Call toll-free, 1-888-TRAXXAS**

Driveshaft Assembly

Driveshafts

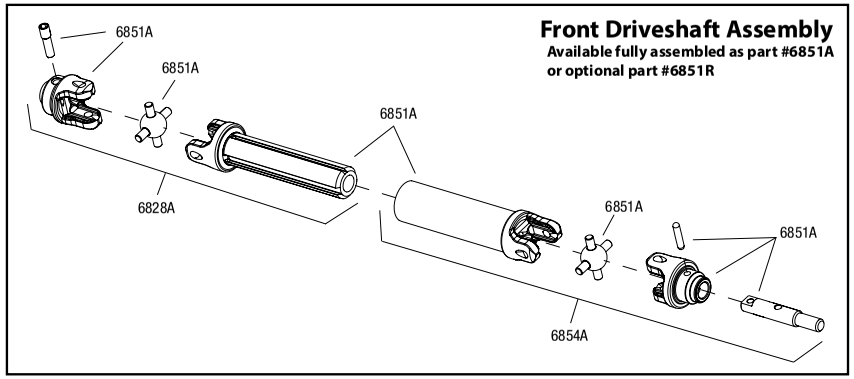

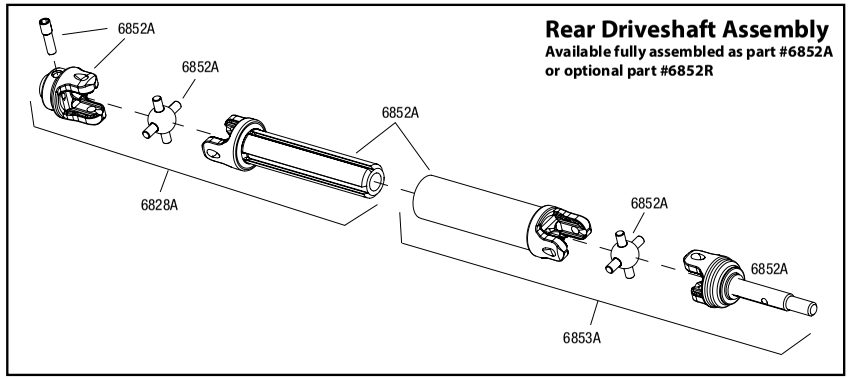

Modular Assembly

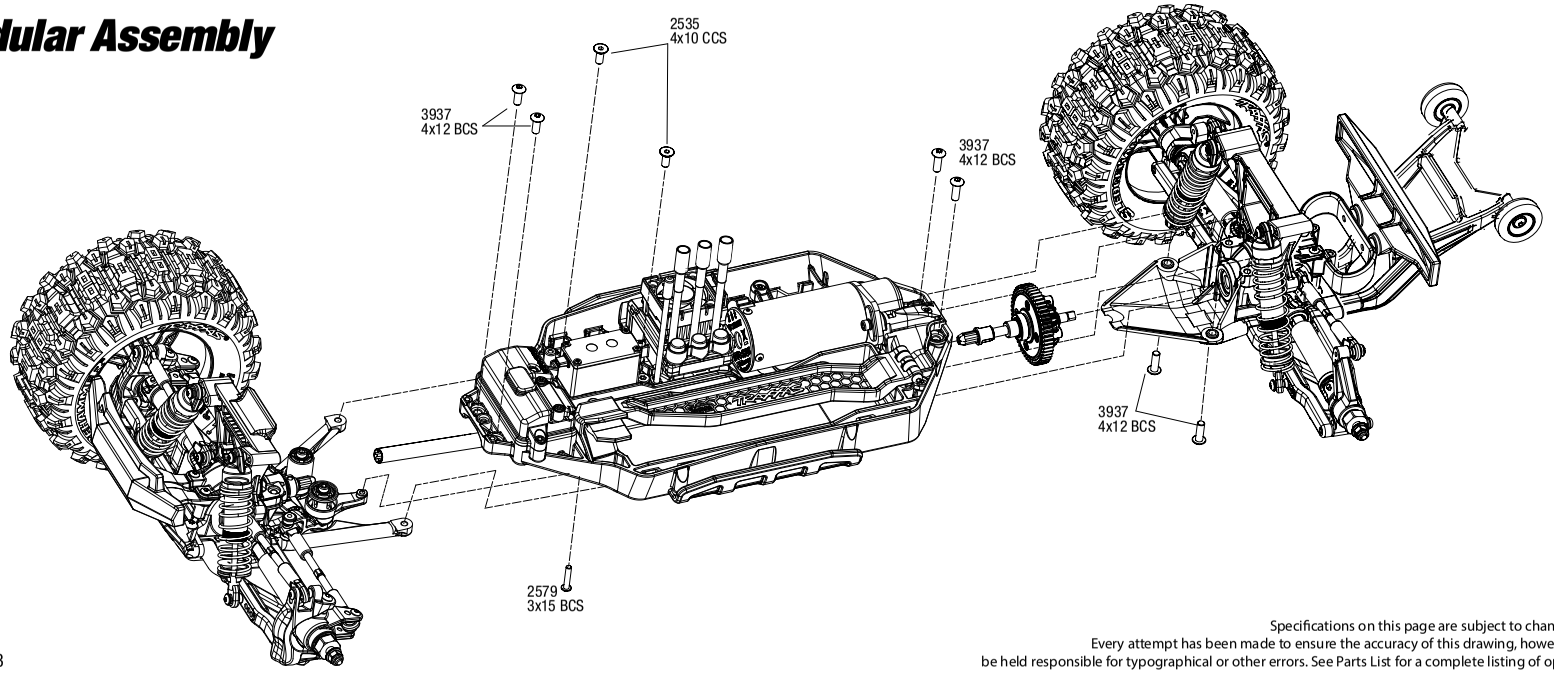

REV 200922-R03

Specifications on this page are subject to change without notice.
Every attempt has been made to ensure the accuracy of this drawing, however Traxxas cannot
be held responsible for typographical or other errors. See Parts List for a complete listing of optional accessories.

HOSS 4X4 VXL (90076-4)

Body Assembly

Completed Assembly (view from bottom)

See Parts List for a complete listing of optional accessories.

Specifications on this page are subject to change without notice. Every attempt has been made to ensure the accuracy of this drawing; however, Traxxas cannot be held responsible for typographical or other errors.

REV 200922-R03

PARTS SHOWN IN BOLD ARE OPTIONAL ACCESSORIES.

Part categories and individual part listings are arranged alphabetically.

Bearings & Bushings

4607 Ball bearings (5x11x4mm) (8)
4612 Ball bearings (10x15x4mm) (2)
2728 Ball bearings (5x8x2.5mm) (2)
5119A Ball bearings, black rubber sealed (10x15x4mm) (2)
5119 Ball bearings, blue rubber sealed (10x15x4mm) (2)
5120 Ball bearings, blue rubber sealed (12x18x4mm) (2)
5116 Ball bearings, blue rubber sealed (5x11x4mm) (2)
5114 Ball bearings, blue rubber sealed (5x8x2.5mm) (2)
5117 Ball bearings, blue rubber sealed (6x12x4mm) (2)
5118 Ball bearings, blue rubber sealed (8x16x5mm) (2)
1985 PTFE-coated washers, 5x8x0.5mm (20) (use with ball bearings)

Body & Accessories

1926 Antenna caps, vinyl (2)/ antenna spool
1726 Antenna, tube (1)/ vinyl antenna cap (1)/ wire retainer (1)
9015 Body mounts, front & rear/ 3x12mm CS (4)/ 3x12mm shoulder screw (2)/ 3x10mm flat-head machine screw (6)/ 3x12mm BCS (1)
9010 Body reinforcement set #9011
9013 Body support/ 3x12mm CS (4) / (fits #9011 body)
9011 Body, Hoss™ 4X4 (clear, requires painting)/ window, grille, lights decal sheet
9011G Body, Hoss™ 4X4 VXL, green/ window, grille, lights decal sheet (assembled with front & rear body mounts and rear body support for clipless mounting)
9011A Body, Hoss™ 4X4 VXL, orange/ window, grille, lights decal sheet (assembled with front & rear body mounts and rear body support for clipless mounting)
9011X Body, Hoss™ 4X4, ProGraphix® (Graphics are printed, requires paint & final color application)/ window, grille, lights decal sheet
2514 Decal sheet, racing sponsors
9950 Official Team Traxxas® racing decal set (flag logo/ 6-color)
9017 Skid plate, roof (body) (black) (left & right)/ 3x8mm CS (4)
9012 Tailgate protector/ 3x10mm flat-head screw (3)

Center Driveline

5119A Ball bearings, black rubber sealed (10x15x4mm) (2)
5119 Ball bearings, blue rubber sealed (10x15x4mm) (2)
5120 Ball bearings, blue rubber sealed (12x18x4mm) (2)
5116 Ball bearings, blue rubber sealed (5x11x4mm) (2)
5117 Ball bearings, blue rubber sealed (6x12x4mm) (2)
9041 Cover, center driveshaft (clear)
6877 Cover, gear/ motor wire hold-down clip
7477 Cover, gear/ wire retainer
6888 Drive hub, center, rear (1)/ 4x3 GS (1)
6888X Drive hub, front, hardened steel (1)/ screw pin (1)
9090 Gear adapter, fixed
5148 Grease, white lithium
6890 Plate, motor
6890X Plate, motor, 6061-T6 aluminum (blue-anodized)
2575 Screws, 3x6mm button-head machine (hex drive) (6)
2554 Screws, 3x6mm cap-head machine (hex drive) (6)
3932 Screws, 3x6mm flat-head machine (hex drive) (6)
1647 Silicone grease

Chassis & Attachments

9026 Battery hold-down (2)/ battery clip/ hold-down post/ screw pin/ pivot post screw
6724 Box, receiver (sealed)/ foam pad/ 2.5x8mm CS (4)/ 3x10mm CS (2)
9035 Bumper, front/ bumper support
9036 Bumper, rear/ bumper mount, rear/ bumper support, rear
9022 Chassis
9023 Nerf bars, chassis (2)
9078 Wheelie bar (assembled)
6777 Wheelie bar mounts/ rear skidplate (black)
3678 Wheelie bar, assembled (black) (fits Slash, Bandit, Rustler®, Stampede® series)
3678X Wheelie bar, assembled (blue) (fits Slash, Bandit, Rustler®, Stampede® series)
3678A Wheelie bar, assembled (green) (fits Slash, Bandit, Rustler®, Stampede® series)
3678P Wheelie bar, assembled (pink) (fits Slash, Bandit, Rustler®, Stampede® series)

Differential Components

5119 Ball bearings, blue rubber sealed (10x15x4mm) (2)
5117 Ball bearings, blue rubber sealed (6x12x4mm) (2)
5118 Ball bearings, blue rubber sealed (8x16x5mm) (2)
5381 Carrier, differential/ x-ring gaskets (2)/ ring gear gasket/ 6x10x0.5 TW
6780 Differential kit, center (complete)
5136X Differential oil kit (1 each: 10K, 30K, 50K weights)
6788 Differential, front (complete with pinion gear and differential plastics) (fits 1/10-scale 4X4 Slash, Stampede®, Rustler®, Rally)
6783 Gear set, center differential (output gears (2)/ spider gears (4)/ spider gear shaft (2))
6882X Gear set, differential (output gears (2)/ spider gears (2)/ spider gear shaft, carrier support)
6781 Housing, center differential (aluminum)/ x-ring gaskets (2)/ ring gear gasket/ bushings (2)/ 5x10x0.5mm PTFE-coated washers (2)/ 2.5x8 CCS (4)
9081 Housing, center differential/ x-ring gaskets (2)/ 5x10x0.5 PTFE-coated washer (1)/ 2.5x8 CCS (4)
6881 Housings, differential, front
6880 Housings, differential, rear
6782 Output gears, center differential, hardened steel (2)
5379X Ring gear, differential/ pinion gear, differential
5379R Ring gear, differential/ pinion gear, differential (machined, spiral cut) (front)
6879R Ring gear, differential/ pinion gear, differential (machined, spiral cut) (rear)
6879 Ring gear, differential/ pinion gear, differential (rear)
3965 Screws, 2.5x8mm cap-head machine (6)
1647 Silicone grease

Driveline Components

5119A Ball bearings, black rubber sealed (10x15x4mm) (2)
5119 Ball bearings, blue rubber sealed (10x15x4mm) (2)
5116 Ball bearings, blue rubber sealed (5x11x4mm) (2)
9059X Cross pin (2)/ drive pin (2) (repairs 2 axle shafts)
6758 Differential output shaft (for steel constant-velocity driveshafts) (2)
9057X Differential output shafts, steel-splined constant-velocity (2)
6828A Differential output yoke assembly, extreme heavy duty (2) (left or right, front or rear) (assembled with external-splined half shaft)
6851A Driveshaft assembly, front, extreme heavy duty (1) (left or right) (fully assembled, ready to install)/ screw pin (1)
6852A Driveshaft assembly, rear, extreme heavy duty (1) (left or right) (fully assembled, ready to install)/ screw pin (1)
6765 Driveshaft, center, 6061-T6 aluminum (blue-anodized) (189mm)
6765G Driveshaft, center, 6061-T6 aluminum (green-anodized) (189mm)
6765A Driveshaft, center, 6061-T6 aluminum (orange-anodized) (189mm)
6765R Driveshaft, center, 6061-T6 aluminum (red-anodized) (189mm)
6767 Driveshaft, center, plastic, (black)/ screw pin
6851R Driveshafts, front, steel-spline constant-velocity (complete assembly) (2)
9051X Driveshafts, front, steel-spline constant-velocity (complete assembly) (2)
6852R Driveshafts, rear, steel-spline constant-velocity (complete assembly) (2)
9052X Driveshafts, rear, steel-spline constant-velocity (complete assembly) (2)
9055X Half shaft, external splined (steel-spline constant velocity) (1)
6750 Half shaft, external splined (steel-spline constant-velocity) (1)
9056X Half shaft, internal splined (steel-spline constant velocity) (1)
6751 Half shaft, internal splined (steel-spline constant-velocity) (1)
6757 Rebuild kit, steel-splined constant-velocity driveshafts (includes pins, dustboots, lube, and hardware)
9058X Rebuild kit, steel-splined constant-velocity driveshafts (includes pins, lube, and hardware for two axle shafts)
6854A Stub axle assembly, front, outer, extreme heavy duty (1) (left or right) (assembled with internal-splined half shaft)
6853A Stub axle assembly, rear, outer, extreme heavy duty (1) (left or right) (assembled with internal-splined half shaft)
6754 Stub axle, front, 5mm (steel-splined constant-velocity driveshaft) (1)
9054X Stub axle, front, steel-splined constant velocity (1)
6753 Stub axle, rear, 5mm (steel-splined constant-velocity driveshaft) (1)
9053X Stub axle, rear, steel-splined constant velocity (1)
1654 Wheel hubs, hex (2)/ stub axle pins (2)
1654X Wheel hubs, hex (blue-anodized, lightweight aluminum) (2)/ axle pins(4)

HOSS 4X4 VXL (90076-4)

Front Suspension & Steering

2728	**Ball bearings (5x8x2.5mm) (2)**
5114	Ball bearings, blue rubber sealed (5x8x2.5mm) (2)
6823	Bulkhead tie bars, front & rear, aluminum (blue-anodized)
6830X	Bulkhead, front
6735	Bumper, front/ skidplate, front (black)
3643X	**Camber links, front (TUBES blue-anodized, 7075-T6 aluminum, stronger than titanium) (83mm) (2)/ rod ends (4)/ aluminum wrench (1) (#2579 3x15 BCS (4) required for installation)**
3643G	**Camber links, front (TUBES green-anodized, 7075-T6 aluminum, stronger than titanium) (83mm) (2)/ rod ends (4)/ aluminum wrench (1) (#2579 3x15 BCS (4) required for installation)**
3643R	**Camber links, front (TUBES red-anodized, 7075-T6 aluminum, stronger than titanium) (83mm) (2)/ rod ends (4)/ aluminum wrench (1) (#2579 3x15 BCS (4) required for installation)**
6832X	**Caster blocks (c-hubs), 6061-T6 aluminum (blue-anodized), left & right**
6832	Caster blocks (c-hubs), left & right
6851A	Driveshaft assembly, front, extreme heavy duty (1) (left or right) (fully assembled, ready to install)/ screw pin (1)
6851R	**Driveshafts, front, steel-spline constant-velocity (complete assembly) (2)**
7438	Linkage, steering
6739	Shock tower, front
6739X	**Shock tower, front, 7075-T6 aluminum (blue-anodized) (1)/ body mount bracket (1)**
6739G	**Shock tower, front, 7075-T6 aluminum (green-anodized) (1)/ body mount bracket (1)**
6739R	**Shock tower, front, 7075-T6 aluminum (red-anodized) (1)/ body mount bracket (1)**
6845X	Steering bellcranks/ servo saver/ servo saver spring/ servo spring retainer/servo horn, steering
6837X	**Steering blocks, 6061-T6 aluminum (blue-anodized), left & right**
6837	Steering blocks, left & right
6854A	**Stub axle assembly, front, outer, extreme heavy duty (1) (left or right) (assembled with internal-splined half shaft)**
6754	**Stub axle, front, 5mm (steel-splined constant-velocity driveshaft) (1)**
3655P	**Suspension arms, blue, front/rear (left & right), heavy duty (2)**
3655R	Suspension arms, front/rear (left & right), heavy duty (2)
3655G	**Suspension arms, green, front/rear (left & right), heavy duty (2)**
3655T	**Suspension arms, orange, front/rear (left & right), heavy duty (2)**
3655L	**Suspension arms, red, front/rear (left & right), heavy duty (2)**
3655A	**Suspension arms, white, front/rear (left & right), heavy duty (2)**
6834	Suspension pin set, complete (front and rear)
6898	**Sway bar kit (front and rear) (includes front and rear sway bars and adjustable linkage)**
6742X	**Toe links (TUBES blue-anodized, 7075-T6 aluminum, stronger than titanium) (87mm) (2)/ rod ends (4)/ aluminum wrench (1)**
6742G	**Toe links (TUBES green-anodized, 7075-T6 aluminum, stronger than titanium) (87mm) (2)/ rod ends (4)/ aluminum wrench (1)**
6742R	**Toe links (TUBES red-anodized, 7075-T6 aluminum, stronger than titanium) (87mm) (2)/ rod ends (4)/ aluminum wrench (1)**
3643	Turnbuckles, camber link, 49mm (82mm center to center) (assembled with rod ends and hollow balls) (1 left, 1 right)
5539	Turnbuckles, camber links, 58mm (assembled with rod ends and hollow balls) (2)

Hardware

1926	Antenna caps, vinyl (2)/ antenna spool
1726	Antenna, tube (1)/ vinyl antenna cap (1)/ wire retainer (1)
1552	Screws, 3x8mm cap-head machine (hex drive) (6)/washers (6)/ wrench
3935	Body clip (mounting clip), angled, 90-degrees (10)
3935A	**Body clip (mounting clip), angled, 90-degrees (black) (10)**
3934	Body clips, heavy duty (12)
1589	Double-sided adhesive tape (25mm x 25mm) (2)
2586	Screws, 3x15mm cap-head machine (hex drive) (6)
2745	Nuts, 3mm nylon locking (12)
3647	Nuts, 4mm flanged nylon locking (steel, serrated) (8)
1747	Nuts, 4mm nylon locking (10)
1747A	**Nuts, aluminum, flanged, serrated (4mm) (red-anodized) (4)**
1985	PTFE-coated washers, 5x8x0.5mm (20) (use with ball bearings)
5525	Rod ends (12)/ hollow balls (12)
2742X	Rod ends, short (6)/ hollow balls (6)
3347	Screws, 2.5x5mm button-head machine (hex drive) (6)
3215	Screws, 2.5x6mm cap-head machine (hex drive) (6)
3965	Screws, 2.5x8mm cap-head machine (6)
2577	Screws, 3x10mm button-head machine (hex drive) (6)
2578	Screws, 3x12mm button-head machine (hex drive) (6)
2552	Screws, 3x12mm countersunk machine (6) (hex drive)
2579	Screws, 3x15mm button-head machine (hex drive) (6)
3646	Screws, 3x15mm flat-head machine (hex drive) (6)
2583	Screws, 3x18mm button-head machine (hex drive) (6)
2580	Screws, 3x20mm button-head machine (hex drive) (6)
2591	Screws, 3x23mm button-head machine (hex drive) (6)
2582	Screws, 3x30mm button-head machine (hex drive) (6)
2592	Screws, 3x40mm button-head machine (hex drive) (6)
2575	Screws, 3x6mm button-head machine (hex drive) (6)
2534	Screws, 3x6mm countersunk machine (6) (hex drive)
3932	Screws, 3x6mm flat-head machine (hex drive) (6)
2576	Screws, 3x8mm button-head machine (hex drive) (6)
3931	Screws, 3x8mm flat-head machine (hex drive) (6)
3936	Screws, 4x10mm button-head machine (hex drive) (6)
3937	Screws, 4x12mm button-head machine (hex drive) (6)
2542	Screws, 4x12mm countersunk machine (hex drive) (6)
3938	Screws, 4x14mm button-head machine (hex drive) (6)
2546	Screws, 4x15mm countersunk machine (hex drive) (6)
2743	Set (grub) screws, 3mm hardened (12)
3642X	Shoulder screws, Ultra Shocks (3x12 hex drive) (6)
2754	Stub axle pins (4)
2748X	Tool Set (1.5mm &2.5mm allens/ 4-way lug, 8mm &4mm wrench & U-joint wrenches)
2746	Washers, 3x6mm metal (12)

Motors & Electronics

1726	Antenna, tube (1)/ vinyl antenna cap (1)/ wire retainer (1)
2260	**BEC assembly (complete)**
3456	**Cooling fan kit (with shroud) (fits #3351R and #3461 motors) (requires #3458 heat sink to mount)**
3340	Cooling fan, Velineon® VXL-3s ESC
9090	Gear adapter, fixed
2072A	Gear set (for 2070, 2075 servos)
2072X	**Gear set, metal (for 2070, 2075 servos)**
2252	**Gear set, metal (for 2250, 2255 servos)**
2072R	**Gear set, metal, high speed (for 2070, 2075 servos)**
3458	**Heat sink (fits #3351R and #3461 motors)**
6860A	Motor mount (assembled with 3x6 flat-head machine screw)/ 3.0mm NL (1)
6860R	**Motor mount, 6061-T6 aluminum (blue-anodized)**
3461	Motor, Velineon® 540XL, 2400Kv 70mm, brushless (assembled with 12-gauge wire and gold-plated bullet connectors) (for Maxx®/Hoss™) (not for use in marine models)
6890	Plate, motor
6890X	**Plate, motor, 6061-T6 aluminum (blue-anodized)**
3347	Screws, 2.5x5mm button-head machine (hex drive) (6)
3932	Screws, 3x6mm flat-head machine (hex drive) (6)
2254	**Servo case, aluminum (blue-anodized) (middle) (for 2250 servo)**
2253	**Servo case, aluminum (red-anodized) (middle) (for 2255 servo)**
2251	**Servo case, plastic (top, middle, bottom)/ gaskets/ hardware (for 2250, 2255 servos)**
2074	Servo case/gaskets (for 2056 and 2075 waterproof servos)
2075R	**Servo, digital high-speed, metal gear (ball bearing), waterproof**
2075	Servo, digital high-torque (ball bearing), waterproof
2250	**Servo, digital high-torque 330 coreless, metal gear (ball bearing), waterproof**
2255	**Servo, digital high-torque 400 brushless, metal gear (ball bearing), waterproof**
2075X	**Servo, digital high-torque, metal gear (ball bearing), waterproof**

Radio System, Batteries & Chargers

2849X	**4000mAh 11.1v 3-Cell 25C LiPo Battery**
2872X	**5000mAh 11.1v 3-Cell 25C LiPo Battery**
2843X	**5800mAh 7.4v 2-Cell 25C LiPo Battery**
2857X	**6400mAh 11.1v 3-Cell 25C LiPo Battery**
2869X	**7600mAh 7.4v 2-Cell 25C LiPo Battery**
2976	**AC to DC converter, 40W**
2938X	**Adapter, Traxxas® iD® LiPo battery (adapts Traxxas iD batteries to separate balance ports)**
2943	**Battery charge indicators (green (4), blue (4), grey (4))**
6548	Battery door, transmitter (replacement for #6516, 6517, 6528, 6529, 6530 transmitters)
2914	**Battery, Power Cell AA Alkaline (4)**
2923X	**Battery, Power Cell, 3000mAh (NiMH, 7-C flat, 8.4V)**
2926X	**Battery, Power Cell, 3000mAh (NiMH, 7-C hump, 8.4V)**
2940X	**Battery, Series 3 Power Cell, 3300mAh (NiMH, 7-C flat, 8.4V)**
2941X	**Battery, Series 3 Power Cell, 3300mAh (NiMH, 7-C hump, 8.4V)**
2950X	**Battery, Series 4 Power Cell, 4200mAh (NiMH, 7-C flat, 8.4V)**
2951X	**Battery, Series 4 Power Cell, 4200mAh (NiMH, 7-C hump, 8.4V)**
2960X	**Battery, Series 5 Power Cell, 5000mAh (NiMH, 7-C flat, 8.4V)**
2961X	**Battery, Series 5 Power Cell, 5000mAh (NiMH, 7-C hump, 8.4V)**
2983	**Battery/charger completer pack (includes #2969 2-amp NiMH peak detecting AC charger (1), #2923X 3000mAh 8.4V 7-cell NiMH battery (1))**

2992	**Battery/charger completer pack (includes #2970 iD® charger (1), #2843X 5800mAh 7.4V 2-cell 25C LiPo battery (1))**
2994	**Battery/charger completer pack (includes #2970 iD® charger (1), #2849X 4000mAh 11.1v 3-Cell 25C LiPo Battery (1))**
2260	**BEC assembly (complete)**
2975	**Charger, DC, 4 amp (6 - 7 cell, 7.2 - 8.4 volt, NiMH)**
2972	**Charger, EZ-Peak® Dual, 100W, NiMH/LiPo with iD® Auto Battery Identification**
2973	**Charger, EZ-Peak® Live Dual, 200W, NiMH/LiPo with iD® Auto Battery Identification**
2971	**Charger, EZ-Peak® Live, 100W, NiMH/LiPo with iD® Auto Battery Identification**
2970	**Charger, EZ-Peak® Plus, 4 amp, NiMH/LiPo with iD® Auto Battery Identification**
6525	**Communication link, telemetry expander**
6541	**Connector, power tap (with cable) (long)/ wire tie**
2978	**Fuse, charger, 5A (2) (for #2974, 2975, 2977)**
2072A	Gear set (for 2070, 2075 servos)
2072X	**Gear set, metal (for 2070, 2075 servos)**
2252	**Gear set, metal (for 2250, 2255 servos)**
2072R	**Gear set, metal, high speed (for 2070, 2075 servos)**
2968X	**LiPo cell voltage checker/balancer (includes #2938X adapter for Traxxas® iD® batteries)**
2968	**LiPo cell voltage checker/balancer (requires #2938X adapter for Traxxas® iD® batteries)**
6535	**Mount, temperature sensor (electric motors)/ wire tie/ thermal pad**
6533	Receiver, micro, TQi 2.4GHz with telemetry & TSM (5-channel)
3932	Screws, 3x6mm flat-head machine (hex drive) (6)
6552	**Seal kit, expander box (includes o-ring, seals, and silicone grease)**
6526	**Sensor, auto-detectable, temperature**
6527	**Sensor, auto-detectable, voltage**
6521	**Sensor, temperature and voltage (long)**
2254	**Servo case, aluminum (blue-anodized) (middle) (for 2250 servo)**
2253	**Servo case, aluminum (red-anodized) (middle) (for 2255 servo)**
2251	**Servo case, plastic (top, middle, bottom)/ gaskets/ hardware (for 2250, 2255 servos)**
2074	Servo case/gaskets (for 2056 and 2075 waterproof servos)
2075R	**Servo, digital high-speed, metal gear (ball bearing), waterproof**
2075	Servo, digital high-torque (ball bearing), waterproof
2250	**Servo, digital high-torque 330 coreless, metal gear (ball bearing), waterproof**
2255	**Servo, digital high-torque 400 brushless, metal gear (ball bearing), waterproof**
2075X	**Servo, digital high-torque, metal gear (ball bearing), waterproof**
6553X	**Telemetry expander 2.0 and GPS module 2.0, TQi radio system**
6550X	**Telemetry expander 2.0, TQi radio system (for use only with #6551X GPS module)**
6551X	**Telemetry GPS module 2.0, TQi radio system (for use only with #6550X telemetry expander)**
6509R	TQi 2.4 GHz High Output radio system, 2-channel, Traxxas Link™ enabled, TSM (2-ch transmitter, 5-ch micro receiver)
6507R	**TQi 2.4 GHz High Output radio system, 4-channel with Traxxas Link™ Wireless Module, TSM (4-ch transmitter, 5-ch micro receiver)**
6528	Transmitter, TQi Traxxas Link™ enabled, 2.4GHz high output, 2-channel (transmitter only)
6529	**Transmitter, TQi Traxxas Link™ enabled, 2.4GHz high output, 3-channel (transmitter only)**
6530	**Transmitter, TQi Traxxas Link™ enabled, 2.4GHz high output, 4-channel (transmitter only)**
6511	**Traxxas Link™ Wireless Module**

Ready-To-Race Model

90076-4	Hoss™ 4X4 VXL: 1/10 Scale Monster Truck with TQi Traxxas Link™ Enabled 2.4GHz Radio System & Traxxas Stability Management (TSM)®

Rear Suspension

6823	Bulkhead tie bars, front & rear, aluminum (blue-anodized)
6829	Bulkhead, rear
3644X	**Camber links, rear (TUBES blue-anodized, 7075-T6 aluminum, stronger than titanium) (73mm) (2)/ rod ends (4)/ aluminum wrench (1) (#2579 3x15 BCS (4) required for installation)**
3644G	**Camber links, rear (TUBES green-anodized 7075-T6 aluminum, stronger than titanium) (73mm) (2)/ rod ends (4)/ aluminum wrench (1) (#2579 3x15 BCS (4) required for installation)**
3644R	**Camber links, rear (TUBES red-anodized, 7075-T6 aluminum, stronger than titanium) (73mm) (2)/ rod ends (4)/ aluminum wrench (1) (#2579 3x15 BCS (4) required for installation)**
1952X	**Carriers, stub axle (blue-anodized 6061-T6 aluminum) (rear) (2)**
1952G	**Carriers, stub axle (green-anodized 6061-T6 aluminum) (rear) (2)**
1952T	**Carriers, stub axle (orange-anodized 6061-T6 aluminum) (rear) (2)**
1952	Carriers, stub axle (rear) (2)
1952A	**Carriers, stub axle (red-anodized 6061-T6 aluminum) (rear) (2)**
6852A	Driveshaft assembly, rear, extreme heavy duty (1) (left or right) (fully assembled, ready to install)/ screw pin (1)
6852R	**Driveshafts, rear, steel-spline constant-velocity (complete assembly) (2)**
6738	Shock tower, rear
6738X	**Shock tower, rear, 7075-T6 aluminum (blue-anodized) (1)/ body mount bracket (1)**
6738G	**Shock tower, rear, 7075-T6 aluminum (green-anodized) (1)/ body mount bracket (1)**
6738R	**Shock tower, rear, 7075-T6 aluminum (red-anodized) (1)/ body mount bracket (1)**
6853A	**Stub axle assembly, rear, outer, extreme heavy duty (1) (left or right) (assembled with internal-splined half shaft)**
3655P	**Suspension arms, blue, front/rear (left & right), heavy duty (2)**
3655R	Suspension arms, front/rear (left & right), heavy duty (2)
3655G	**Suspension arms, green, front/rear (left & right), heavy duty (2)**
3655T	**Suspension arms, orange, front/rear (left & right), heavy duty (2)**
3655L	**Suspension arms, red, front/rear (left & right), heavy duty (2)**
3655A	**Suspension arms, white, front/rear (left & right), heavy duty (2)**
6834	Suspension pin set, complete (front and rear)
6898	**Sway bar kit (front and rear) (includes front and rear sway bars and adjustable linkage)**
3644	Turnbuckles, camber link, 39mm (69mm center to center) (assembled with rod ends and hollow balls) (1 left, 1 right) (fits front & rear on Slash, rear on Slash 4X4)

Shocks (GTR)

7466X	**Body, GTR long (hard-anodized, PTFE-coated aluminum) (1)**
7466	**Body, GTR long shock, aluminum (blue-anodized) (PTFE-coated bodies) (1)**
7466G	**Body, GTR long shock, aluminum (green-anodized) (PTFE-coated bodies) (1)**
7466A	**Body, GTR long shock, aluminum (orange-anodized) (PTFE-coated bodies) (1)**
7467X	**Body, GTR xx-long (hard-anodized, PTFE-coated aluminum) (1)**
7467	**Body, GTR xx-long shock, aluminum (blue-anodized) (PTFE-coated bodies) (1)**
7467G	**Body, GTR xx-long shock, aluminum (green-anodized) (PTFE-coated bodies) (1)**
7467A	**Body, GTR xx-long shock, aluminum (orange-anodized) (PTFE-coated bodies) (1)**
7468	**Caps and spring retainers, GTR long/xx-long shock (upper cap (2)/ hollow balls (4)/ bottom cap (2)/ upper retainer (2)/ lower retainer (2))**
7463	**Rebuild kit, GTR long/xx-long shocks (x-rings, bladders, pistons, piston nuts, shock rod ends, hollow balls) (renews 2 shocks)**
5469	**Rod ends (GTR shocks) (6)**
7464T	**Shaft, GTR long, TiN-coated (2)**
7465T	**Shaft, GTR xx-long, TiN-coated (2)**
7461	**Shocks, GTR long blue-anodized, PTFE-coated bodies with TiN shafts (fully assembled, without springs) (2)**
7461G	**Shocks, GTR long green-anodized, PTFE-coated bodies with TiN shafts (fully assembled, without springs) (2)**
7461X	**Shocks, GTR long hard-anodized, PTFE-coated bodies with TiN shafts (assembled) (2) (without springs)**
7462	**Shocks, GTR xx-long blue-anodized, PTFE-coated bodies with TiN shafts (fully assembled, without springs) (2)**
7462G	**Shocks, GTR xx-long green-anodized, PTFE-coated bodies with TiN shafts (fully assembled, without springs) (2)**
7462X	**Shocks, GTR xx-long hard-anodized, PTFE-coated bodies with TiN shafts (assembled) (2) (without springs)**
7440	**Spring, shock, white (GTR long) (0.623 rate orange) (1 pair)**
7441	**Spring, shock, white (GTR long) (0.653 rate green) (1 pair)**
7444	**Spring, shock, white (GTR long) (0.767 rate black) (1 pair)**
7445	**Spring, shock, white (GTR long) (0.810 rate pink) (1 pair)**
7448	**Spring, shock, white (GTR long) (0.892 rate blue) (1 pair)**
7442	**Spring, shock, white (GTR xx-long) (0.711 rate orange) (1 pair)**
7443	**Spring, shock, white (GTR xx-long) (0.762 rate green) (1 pair)**
7446	**Spring, shock, white (GTR xx-long) (0.874 rate black) (1 pair)**
7447	**Spring, shock, white (GTR xx-long) (0.884 rate pink) (1 pair)**
7449	**Spring, shock, white (GTR xx-long) (1.004 rate blue) (1 pair)**

Shocks (Pro-level Aluminum)

2664	**Big Bore shock cylinder (long) (1)**
2666	**Big Bore shock cylinder (XX-long) (1)**
5862	**Big Bore shocks (hard-anodized & PTFE-coated T6 aluminum) (assembled with TiN shafts and springs) (front & rear) (4)**
2660	**Big Bore shocks (long) (hard-anodized & PTFE-coated T6 aluminum) (assembled with TiN shafts) w/o springs (front) (2)**

HOSS 4X4 VXL (90076-4)

2662 **Big Bore shocks (XX-long) (hard-anodized & PTFE-coated T6 aluminum) (assembled with TiN shafts) w/o springs (rear) (2)**
2669 **Piston head set (2-hole (2)/ 3-hole (2))/ shock mounting bushings & washers (2) (Big Bore Shocks)**
2362 **Rebuild kit, Ultra shocks (for 2 shocks)**
1942 Rod ends (16 long & 4 short)/ hollow ball connectors (18)/ ball screws (2)
2742X Rod ends, short (6)/ hollow balls (6)
2667 **Shock caps, aluminum (Big Bore Shocks) (2)**
1664T **Shock shafts, hardened steel, titanium nitride coated (long) (2)**
2656T **Shock shafts, hardened steel, titanium nitride coated (xx-long) (2)**
1664 Shock shafts, steel, chrome finish (long) (2)
2656 Shock shafts, steel, chrome finish (xx-long) (2)
1765 Silicone diaphragms (4)
1666 Silicone shock oil (30 wt)
2668 **Spring retainers, upper & lower (2)/ spring pre-load spacers: 1mm (4)/ 1.5mm (2)/ 2mm (2)/ 4mm (2)/ 8mm (2) (Big Bore Shocks)**
6863 **Springs, front (progressive, +10% rate, pink) (2)**
6864 Springs, front (progressive, +20% rate, blue) (2)
6862 **Springs, front (progressive, -10% rate, green) (2)**
6861 **Springs, front (progressive, -20% rate, orange) (2)**
6857 **Springs, front (white) (progressive rate) (2)**
6867 Springs, rear (progressive, +10% rate, pink) (2)
6868 **Springs, rear (progressive, +20% rate, blue) (2)**
6866 **Springs, rear (progressive, -10% rate, green) (2)**
6865 **Springs, rear (progressive, -20% rate, orange) (2)**
6858 **Springs, rear (white) (progressive rate) (2)**

Shocks (Ultra Shocks)

3642 **Attachment screws, shock (3x12mm shoulder screws) (6)**
3765A Body, Ultra Shock(s) (long) (grey) (2)
3766A Body, Ultra Shock(s) (XXL) (grey) (2)
5475 Multi-tool (plastic)
2362 **Rebuild kit, Ultra shocks (for 2 shocks)**
1942 **Rod ends (16 long & 4 short)/ hollow ball connectors (18)/ ball screws (2)**
2742X Rod ends, short (6)/ hollow balls (6)
3767 Shock caps (2)/ shock bottoms (2)
8361 Shock caps (black) (4) (assembled with hollow balls)
3767A **Shock caps, aluminum (blue-anodized) (4) (fits all Ultra Shocks)**
3767G **Shock caps, aluminum (green-anodized) (4) (fits all Ultra Shocks)**
3767P **Shock caps, aluminum (pink-anodized) (4) (fits all Ultra Shocks)**
3767X **Shock caps, aluminum (red-anodized) (4) (fits all Ultra Shocks)**
1664T **Shock shafts, hardened steel, titanium nitride coated (long) (2)**
2656T **Shock shafts, hardened steel, titanium nitride coated (xx-long) (2)**
1664 **Shock shafts, steel, chrome finish (long) (2)**
2656 Shock shafts, steel, chrome finish (xx-long) (2)
1765 Silicone diaphragms (4)
1666 **Silicone shock oil (30 wt)**
3769 **Spring pre-load spacers: 1mm (4)/ 2mm (2)/ 4mm (2)/ 8mm (2)**
3768 Spring retainers, upper & lower (2)/ piston head set (2-hole (2)/ 3-hole (2))
3758 **Springs, front (black) (2)**
3758T **Springs, front (blue) (2)**
3758A **Springs, front (green) (2)**
3758P **Springs, front (pink) (2)**
6863 **Springs, front (progressive, +10% rate, pink) (2)**
6864 **Springs, front (progressive, +20% rate, blue) (2)**
6862 **Springs, front (progressive, -10% rate, green) (2)**
6861 **Springs, front (progressive, -20% rate, orange) (2)**
3758X Springs, front (white) (2)
6857 **Springs, front (white) (progressive rate) (2)**
3757 **Springs, rear (black) (2)**
3757T **Springs, rear (blue) (2)**
3757A **Springs, rear (green) (2)**
3757P **Springs, rear (pink) (2)**
6867 **Springs, rear (progressive, +10% rate, pink) (2)**
6868 **Springs, rear (progressive, +20% rate, blue) (2)**
6866 **Springs, rear (progressive, -10% rate, green) (2)**
6865 **Springs, rear (progressive, -20% rate, orange) (2)**
3757X Springs, rear (white) (2)
6858 **Springs, rear (white) (progressive rate) (2)**
3760 **Ultra Shocks (black) (long) (complete w/ spring pre-load spacers & springs) (front) (2)**
3762 **Ultra Shocks (black) (xx-long) (complete w/ spring pre-load spacers & springs) (rear) (2)**
3760A Ultra Shocks (grey) (long) (complete w/ spring pre-load spacers & springs) (2)
3762A Ultra Shocks (grey) (xx-long) (complete w/ spring pre-load spacers & springs) (rear) (2)

Spur Gears & Pinion Gears

6877 Cover, gear/ motor wire hold-down clip
9090 Gear adapter, fixed
5641 **Gear, 11-T pinion (0.8 metric pitch, compatible with 32-pitch) (fits 5mm shaft)/ set screw**
5642 **Gear, 13-T pinion (0.8 metric pitch, compatible with 32-pitch) (fits 5mm shaft)/ set screw**
5640 Gear, 14-T pinion (0.8 metric pitch, compatible with 32-pitch) (fits 5mm shaft)/ set screw
5643 **Gear, 17-T pinion (0.8 metric pitch, compatible with 32-pitch) (fits 5mm shaft)/ set screw**
5644 **Gear, 18-T pinion (0.8 metric pitch, compatible with 32-pitch) (hardened steel) (fits 5mm shaft)/ set screw**
5646 **Gear, 20-T pinion (0.8 metric pitch, compatible with 32-pitch) (fits 5mm shaft)/ set screw**
6842X **Spur gear, steel, 50-tooth (0.8 metric pitch, compatible with 32-pitch) (for center differential)**
3956X Spur gear, steel, 54-tooth (0.8 metric pitch, compatible with 32-pitch) (requires #6780 center differential)

Steering Components

1552 Screws, 3x8mm cap-head machine (hex drive) (6)/washers (6)/ wrench
2728 **Ball bearings (5x8x2.5mm) (2)**
5114 Ball bearings, blue rubber sealed (5x8x2.5mm) (2)
7438 Linkage, steering
2742X Rod ends, short (6)/ hollow balls (6)
6845X Steering bellcranks/ servo saver/ servo saver spring/ servo spring retainer/servo horn, steering
6742 **Toe link, front & rear (molded composite) (2)/ hollow balls (4) (87mm center to center)**
6742X **Toe links (TUBES blue-anodized, 7075-T6 aluminum, stronger than titanium) (87mm) (2)/ rod ends (4)/ aluminum wrench (1)**
6742G **Toe links (TUBES green-anodized, 7075-T6 aluminum, stronger than titanium) (87mm) (2)/ rod ends (4)/ aluminum wrench (1)**
6742R **Toe links (TUBES red-anodized, 7075-T6 aluminum, stronger than titanium) (87mm) (2)/ rod ends (4)/ aluminum wrench (1)**
2746 Washers, 3x6mm metal (12)

Suspension Linkage

3643X **Camber links, front (TUBES blue-anodized, 7075-T6 aluminum, stronger than titanium) (83mm) (2)/ rod ends (4)/ aluminum wrench (1) (#2579 3x15 BCS (4) required for installation)**
3643G **Camber links, front (TUBES green-anodized, 7075-T6 aluminum, stronger than titanium) (83mm) (2)/ rod ends (4)/ aluminum wrench (1) (#2579 3x15 BCS (4) required for installation)**
3643R **Camber links, front (TUBES red-anodized, 7075-T6 aluminum, stronger than titanium) (83mm) (2)/ rod ends (4)/ aluminum wrench (1) (#2579 3x15 BCS (4) required for installation)**
3644X **Camber links, rear (TUBES blue-anodized, 7075-T6 aluminum, stronger than titanium) (73mm) (2)/ rod ends (4)/ aluminum wrench (1) (#2579 3x15 BCS (4) required for installation)**
3644G **Camber links, rear (TUBES green-anodized 7075-T6 aluminum, stronger than titanium) (73mm) (2)/ rod ends (4)/ aluminum wrench (1) (#2579 3x15 BCS (4) required for installation)**
3644R **Camber links, rear (TUBES red-anodized, 7075-T6 aluminum, stronger than titanium) (73mm) (2)/ rod ends (4)/ aluminum wrench (1) (#2579 3x15 BCS (4) required for installation)**
5525 Rod ends (12)/ hollow balls (12)
3739 Screw pin set (Rustler®/ Bandit/ Stampede®)
6834 Suspension pin set, complete (front and rear)
2537 Threaded rods (20/25/44mm 1 ea.)/ (1) 12mm set screw
6742X **Toe links (TUBES blue-anodized, 7075-T6 aluminum, stronger than titanium) (87mm) (2)/ rod ends (4)/ aluminum wrench (1)**
6742G **Toe links (TUBES green-anodized, 7075-T6 aluminum, stronger than titanium) (87mm) (2)/ rod ends (4)/ aluminum wrench (1)**
6742R **Toe links (TUBES red-anodized, 7075-T6 aluminum, stronger than titanium) (87mm) (2)/ rod ends (4)/ aluminum wrench (1)**
3644 Turnbuckles, camber link, 39mm (69mm center to center) (assembled with rod ends and hollow balls) (1 left, 1 right) (fits front & rear on Slash)
3643 Turnbuckles, camber link, 49mm (82mm center to center) (assembled with rod ends and hollow balls) (1 left, 1 right)
5539 Turnbuckles, camber links, 58mm (assembled with rod ends and hollow balls) (2)

Team Traxxas Items

2514 **Decal sheet, racing sponsors**
6160X **DVD, Maxx® Power! Full Throttle Action (sleeve)**
9950 **Official Team Traxxas® racing decal set (flag logo/ 6-color)**
9909 **Traxxas® racing banner, red & black (3x7 feet)**

Tires & Wheels

5116	Ball bearings, blue rubber sealed (5x11x4mm) (2)
3647	Nuts, 4mm flanged nylon locking (steel, serrated) (8)
1747R	**Nuts, aluminum, flanged, serrated (4mm) (blue-anodized) (4)**
1985	PTFE-coated washers, 5x8x0.5mm (20) (use with ball bearings)
1647	Silicone grease
2754	Stub axle pins (4)
4175	**Tires & wheels, assembled, glued (2.8") (All-Star black chrome wheels, paddle tires, foam inserts) (nitro rear/ 4WD electric front/rear) (2) (TSM rated)**
3669A	**Tires & wheels, assembled, glued (2.8") (All-Star black chrome wheels, Talon tires, foam inserts) (nitro rear/ electric front) (2) (TSM rated)**
3669	**Tires & wheels, assembled, glued (2.8") (All-Star chrome wheels, Talon tires, foam inserts) (nitro rear/ electric front) (2)**
6792	**Tires & wheels, assembled, glued (black 2.8" wheels, Sledgehammer™ tires, foam inserts) (2) (TSM® rated)**
9072	Tires & wheels, assembled, glued (black chrome 2.8" wheels, Sledgehammer™ tires, foam inserts) (2) (TSM® rated)
3665X	**Tires & wheels, assembled, glued (chrome wheels, Terra Groove dual profile tires, foam inserts) (nitro rear/ electric front) (2)**
3665	**Tires & wheels, assembled, glued (satin chrome wheels, Terra Groove dual profile tires, foam inserts) (nitro rear/ electric front) (2)**
6771	**Tires and wheels, assembled, glued 2.8" (All-Star chrome wheels, Maxx® tires, foam inserts) (2)**
6769	**Tires, Talon EXT 2.8" (2)/ foam inserts (2)**
1654	Wheel hubs, hex (rear) (2)/ stub axle pins (2)
1654X	**Wheel hubs, hex (blue-anodized, lightweight aluminum) (2)/ axle pins(4)**
6856X	**Wheel hubs, splined, 17mm, short (4)/ wheel nuts, splined, 17mm (4) (blue-anodized)/ hub retainer M4 X 0.7 (4)/ axle pin (4)/ wrench, 5mm**
6772	**Wheels, RXT 2.8" (black) (2)**

Traxxas Tools

3433X	**Body reamer (aluminum handle)**
3433	**Body reamer (plastic handle)**
3436	**Cap, body reamer**
3432	**Scissors, curved tip**
3431	**Scissors, straight tip**
8712	**Speed Bit Essentials Set, hex and nut driver, 7-piece, includes premium handle (medium), travel pouch, hex drivers (straight: 1.5mm, 2.0mm, 2.5mm) and nut drivers (5.0mm, 5.5mm, 7.0mm, and 8.0mm), 1/4" drive**
8721	**Speed bit handle, medium (one piece)**
8720	**Speed bit handle, premium, large (rubber overmold)**
8722	**Speed bit handle, premium, medium (rubber overmold)**
8710	**Speed Bit Master Set, hex and nut driver, 13-piece, includes premium handle (medium), travel pouch, hex drivers (straight: 1.5mm, 2.0mm, 2.5mm, 3.0mm), (ball-end: 2.0mm, 2.5mm, 3.0mm), and nut drivers (4.00mm, 4.50mm, 5.00mm, 5.50mm, 7.00mm, 8.00mm),**
8711	**Speed Bit Master Set, hex driver, 7-piece straight and ball end, includes premium handle (medium), travel pouch, hex drivers (straight: 1.5mm, 2.0mm, 2.5mm, 3.0mm) (ball end: 2.0mm, 2.5mm, 3.0mm), 1/4" drive**
8719	**Speed Bit Master Set, nut driver, 6-piece, includes premium handle (medium), travel pouch, and nut drivers (4.0mm, 4.5mm, 5.0mm, 5.5mm, 7.0mm, 8.0mm), 1/4" drive**
8716	**Speed Bit Set, hex driver, 2-piece ball-end (2.0mm, 2.5mm), 1/4" drive**
8716X	**Speed Bit Set, hex driver, 3-piece ball-end (2.0mm, 2.5mm, 3.0mm), 1/4" drive**
8715	**Speed Bit Set, hex driver, 3-piece straight (1.5mm, 2.0mm, 2.5mm), 1/4" drive**
8715X	**Speed Bit Set, hex driver, 4-piece straight (1.5mm, 2.0mm, 2.5mm, 3.0mm), 1/4" drive**
3415	**Tool set with pouch (includes 1.5mm, 2.0mm, 2.5mm, 3.0mm, 3.5mm, 4mm drivers/ 4mm, 5mm, 5.5mm, 7mm and 8mm nut drivers/ 2mm, 4mm, and 5mm slotted screwdrivers/ #00 Phillips, #0 Phillips, and #1 Phillips screwdrivers/ 4mm and 8mm wrench/ driver handle**

Turnbuckles & Threaded Rods

3643X	**Camber links, front (TUBES blue-anodized, 7075-T6 aluminum, stronger than titanium) (83mm) (2)/ rod ends (4)/ aluminum wrench (1) (#2579 3x15 BCS (4) required for installation)**
3643G	**Camber links, front (TUBES green-anodized, 7075-T6 aluminum, stronger than titanium) (83mm) (2)/ rod ends (4)/ aluminum wrench (1) (#2579 3x15 BCS (4) required for installation)**
3643R	**Camber links, front (TUBES red-anodized, 7075-T6 aluminum, stronger than titanium) (83mm) (2)/ rod ends (4)/ aluminum wrench (1) (#2579 3x15 BCS (4) required for installation)**
3644X	**Camber links, rear (TUBES blue-anodized, 7075-T6 aluminum, stronger than titanium) (73mm) (2)/ rod ends (4)/ aluminum wrench (1) (#2579 3x15 BCS (4) required for installation)**
3644G	**Camber links, rear (TUBES green-anodized 7075-T6 aluminum, stronger than titanium) (73mm) (2)/ rod ends (4)/ aluminum wrench (1) (#2579 3x15 BCS (4) required for installation)**
3644R	**Camber links, rear (TUBES red-anodized, 7075-T6 aluminum, stronger than titanium) (73mm) (2)/ rod ends (4)/ aluminum wrench (1) (#2579 3x15 BCS (4) required for installation)**
5525	Rod ends (12)/ hollow balls (12)
6742	**Toe link, front & rear (molded composite) (2)/ hollow balls (4) (87mm center to center)**
6742X	**Toe links (TUBES blue-anodized, 7075-T6 aluminum, stronger than titanium) (87mm) (2)/ rod ends (4)/ aluminum wrench (1)**
6742G	**Toe links (TUBES green-anodized, 7075-T6 aluminum, stronger than titanium) (87mm) (2)/ rod ends (4)/ aluminum wrench (1)**
6742R	**Toe links (TUBES red-anodized, 7075-T6 aluminum, stronger than titanium) (87mm) (2)/ rod ends (4)/ aluminum wrench (1)**
3644	Turnbuckles, camber link, 39mm (69mm center to center) (assembled with rod ends and hollow balls) (1 left, 1 right) (fits front & rear on Slash)
3643	Turnbuckles, camber link, 49mm (82mm center to center) (assembled with rod ends and hollow balls) (1 left, 1 right)
5539	Turnbuckles, camber links, 58mm (assembled with rod ends and hollow balls) (2)

If you have questions or need technical assistance, call Traxxas at:

1-888-TRAXXAS

(1-888-872-9927) (U.S. residents only)

For orders, calls outside the U.S., and other information, call 972-549-3000, or fax to 972-549-3011 e-mail Traxxas at support@Traxxas.com

TRAXXAS.COM

REV. 201014 1259

Slash 4X4 · E-Revo Summit · E-Revo VXL



WE SCALED DOWN EVERYTHING... EXCEPT THE POWER!

As the Fastest Name In Radio Control, Traxxas sets the standard for speed, power, and innovation. Now, all the speed and capability you expect from Traxxas is available in 1/16 scale! From the oil-filled shocks and sealed, steel-gear differentials to the heavy-duty transmission and shaft-driven 4WD system, each Traxxas 1/16 scale vehicle is engineered for fast, fun, and exciting radio control adventures. And each is fully customizable with genuine Traxxas accessories!

TRAXXAS
The Fastest Name In Radio Control

1/16 SLASH™ 4X4

MODEL 70054-1

1/16-SCALE 4WD
SHORT-COURSE RACING TRUCK



SERIES 1, 6-CELL , 1200 MAH NIMH POWER CELL BATTERY

TITAN® 12-TURN 550 MODIFIED MOTOR

TQ 2.4GHz TRANSMITTER

SLASH 4X4 PERFORMANCE IN 1/16 SCALE,WITH HIGH-TORQUE TITAN 550 POWER!

Traxxas Slash set the standard for short-course fun and versatility; then, Slash 4X4 raised the bar on short-course performance with category-making speed, power, and track-ready handling. Now, you can experience the fun of wheel-to-wheel Slash 4X4 racing, 1/16 scale, with high-torque Titan 550 power--the largest motor in the "mini" class by far! At 14 inches long, the 1/16 Slash 4X4 is about half the size of the 1/10-scale Slash 4X4. But don't call it a "mini"—this is a whole new category of R/C performance and fun that no mere mini-model can match. Short-course styling that captures the attitude of the full-size Traxxas TORC-series racer is just the beginning. Beneath the Race Replica polycarbonate shell, you'll find the winning suspension technology of the eight-time National Champion Traxxas Revo® and the convention-busting innovation of the E-Revo.

1/16 SLASH 4x4

Front Assembly

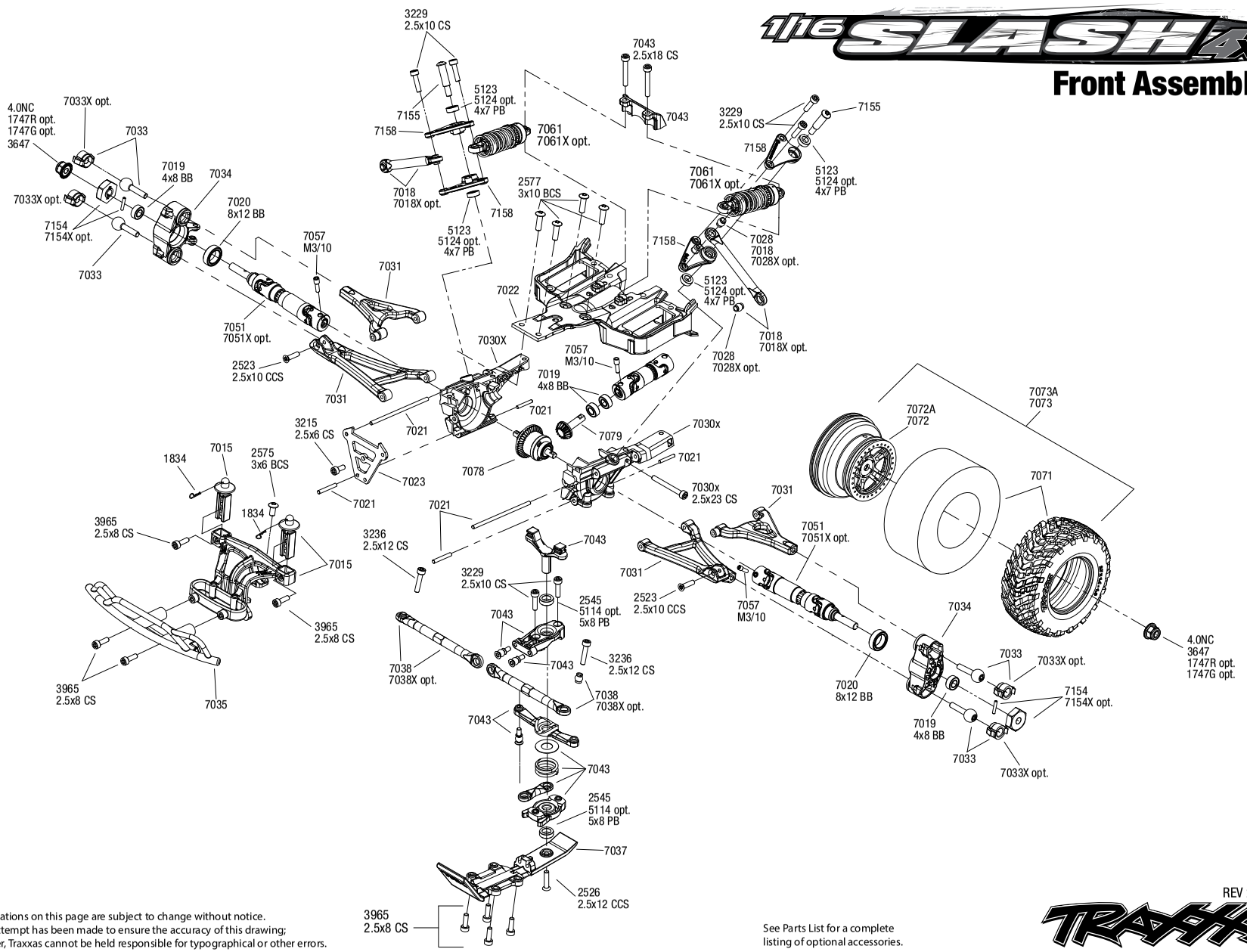

Specifications on this page are subject to change without notice.
Every attempt has been made to ensure the accuracy of this drawing;
however, Traxxas cannot be held responsible for typographical or other errors.

See Parts List for a complete
listing of optional accessories.

REV 201027-R06

TRAXXAS

Questions? **Call toll-free, 1-888-TRAXXAS**

1/16 SLASH 4X4 Chassis Assembly

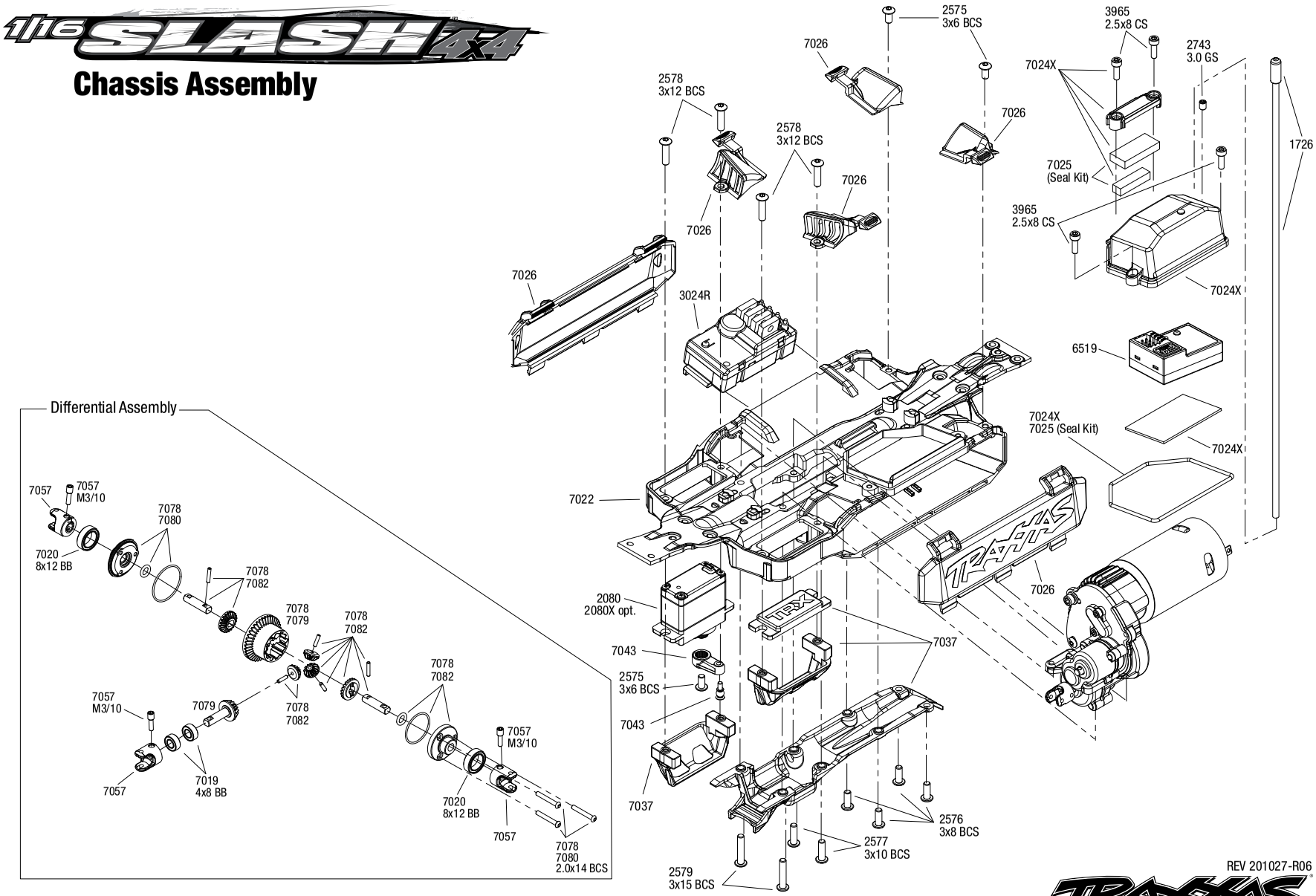

REV 201027-R06

Specifications on this page are subject to change without notice. Every attempt has been made to ensure the accuracy of this drawing; however, Traxxas cannot be held responsible for typographical or other errors.

See Parts List for a complete listing of optional accessories.

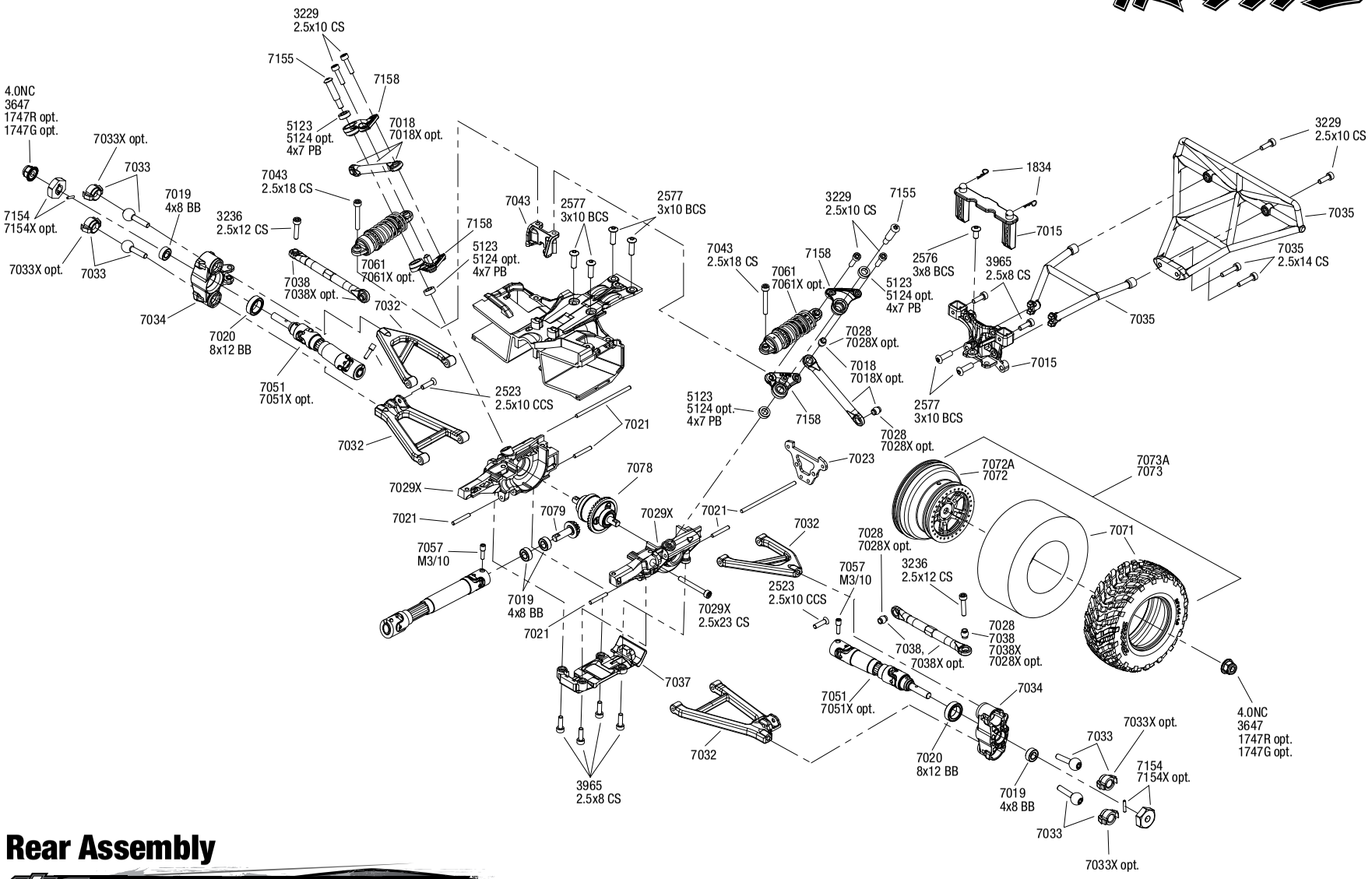

Rear Assembly

1/16 SLASH 4x4

See Parts List for a complete listing of optional accessories.

REV 201027-R06

Specifications on this page are subject to change without notice. Every attempt has been made to ensure the accuracy of this drawing; however, Traxxas cannot be held responsible for typographical or other errors.

1/16 SLASH® 4X4 (70054-1)

Transmission Assembly

REV 201027-R06

Specifications on this page are subject to change without notice. Every attempt has been made to ensure the accuracy of this drawing; however, Traxxas cannot be held responsible for typographical or other errors.

See Parts List for a complete listing of optional accessories.

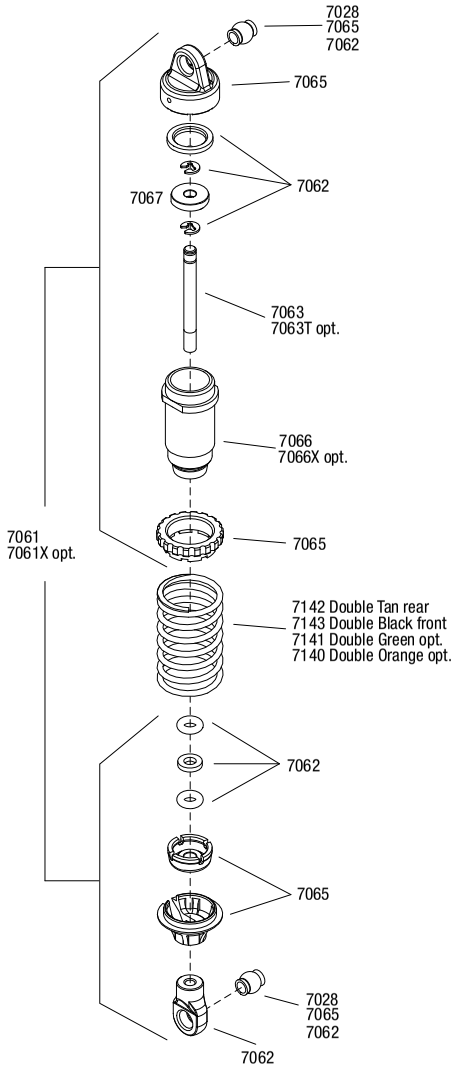

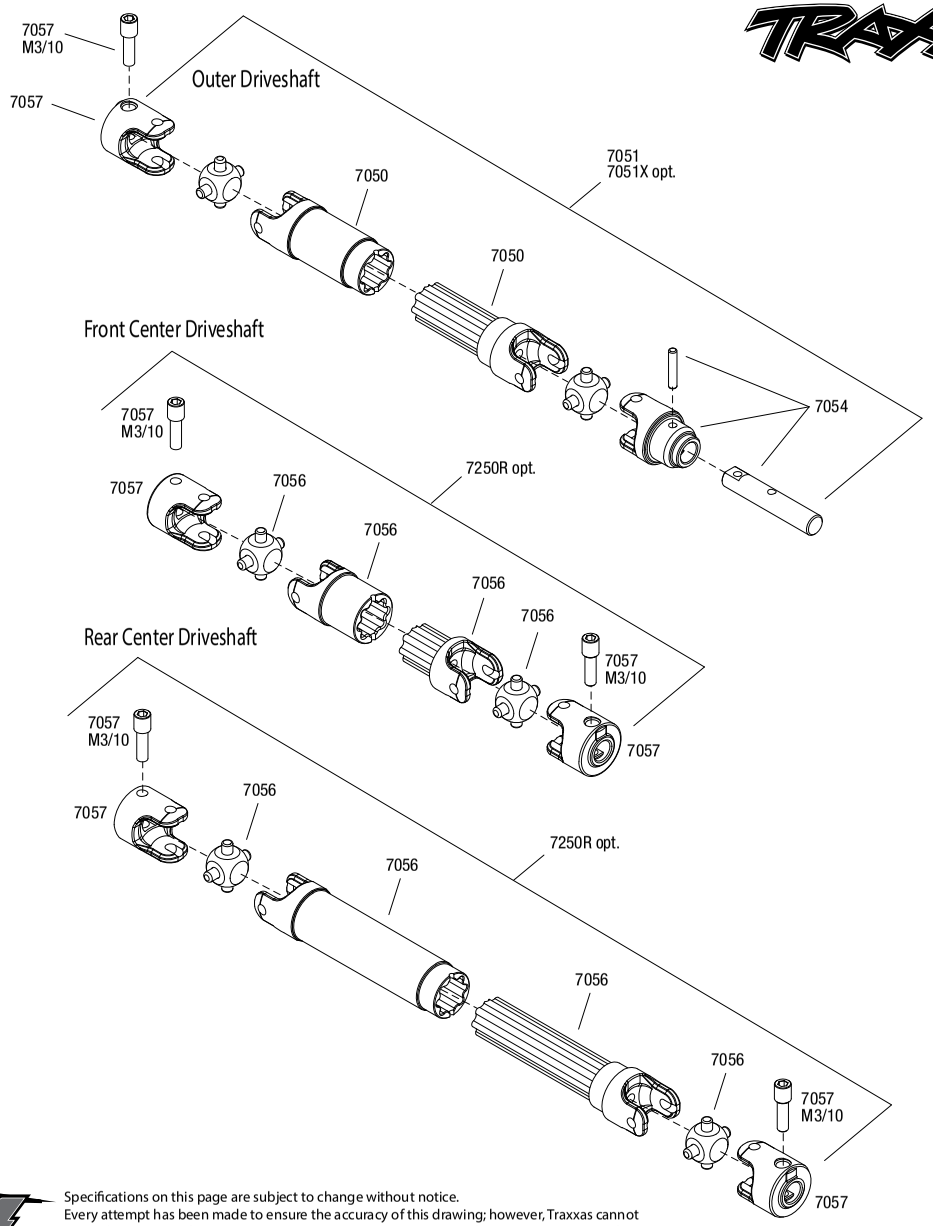

Driveshaft Assembly

1/16 SLASH 4x4

Specifications on this page are subject to change without notice.
Every attempt has been made to ensure the accuracy of this drawing; however, Traxxas cannot be held responsible for typographical or other errors. See Parts List for a complete listing of optional accessories.

REV 201027-R06

1/16 SLASH® 4X4 (70054-1)

PARTS SHOWN IN BOLD ARE OPTIONAL ACCESSORIES.

Part categories and individual part listings are arranged alphabetically.

Bearings & Bushings

5124 **Ball bearings, blue rubber sealed (4x7x2.5mm) (2)**
7019 Ball bearings, blue rubber sealed (4x8x3mm) (2)
5114 **Ball bearings, blue rubber sealed (5x8x2.5mm) (2)**
7020 Ball bearings, blue rubber sealed (8x12x3.5mm) (2)

Body & Accessories

1926 Antenna caps, vinyl (2)/ antenna spool
1726 Antenna, tube (1)/ vinyl antenna cap (1)/ wire retainer (1)
1834 Body clips (12) (standard size)
7015 Body mounts, front & rear/ body mount posts, front & rear
4915 Body washers, foam adhesive (10)
6716 **Body washers, foam, 2mm (2)/ 3mm (2)/ 4mm (4)**
7012 **Body, 1/16 Slash (clear, requires painting)/ grille, lights decal sheet**
7012X **Body, 1/16 Slash, ProGraphix® (replacement for painted body. Graphics are painted - requires paint and final color application)/ decal sheet**
7012R **Body, 1/16th Slash (clear, requires painting)/ grille, lights decal sheet**
7084R Body, Mark Jenkins #25, 1/16 Slash (painted, decals applied)
7085 Body, Mike Jenkins #47, 1/16 Slash (painted, decals applied)
2514 Decal sheet, racing sponsors
7013 **Decal sheets, 1/16 Slash**
7013X Decal sheets, 1/16 Slash 4WD team truck
9950 Official Team Traxxas® racing decal set (flag logo/ 6-color)

Bumpers & Skidplates

7035 Bumpers, front (1)/ rear (1)/ 2.5x14mm CS(2) (1/16 Slash)
7037 Skidplate set, front (1)/ rear (1)/ transmission (1)/ steering servo guards (2) / steering servo cover plate (1)

Chassis & Attachments

7015 Body mounts, front & rear/ body mount posts, front & rear
7024X Box, receiver (sealed)/ wire cover/ foam pads, upper & lower/ silicone grease/ 2.5x8 CS (4)/ 3x4 GS (1)
7023 Bulkhead tie bars, front & rear (blue-anodized aluminum)/ 2.5x6 CS (1)
7030X Bulkhead, front (left & right halves)/ 3x10mm BCS (4)
7029X Bulkhead, rear (left & right halves)/ 3x10mm BCS (4)
7022 Chassis
7026 Door, battery compartment (1)/ vents, battery compartment (1 pair) (fits right or left side)
7025 Seal kit, receiver box (includes o-ring, seals, and silicone grease)
7037 Skidplate set, front (1)/ rear (1)/ transmission (1)/ steering servo guards (2) / steering servo cover plate (1)
7043 Steering arm (upper & lower)/ steering link/ servo horn/ servo saver/ servo saver spring/ servo horn mount/ ball stud (2)/ shock mounts, front & rear/ 2.5x18mm CS (4)

Differential Components

7019 Ball bearings, blue rubber sealed (4x8x3mm) (2)
7020 Ball bearings, blue rubber sealed (8x12x3.5mm) (2)
7080 Cover plates, differential (front or rear)/ gaskets (2)/ o-rings (2)/ 2x14mm BCS (4)
7078 Differential assembly, complete
7014 **Differential kit, center (complete)**
7381 **Differential locker (2)**
5136X **Differential oil kit (1 each: 10K, 30K, 50K weights)**
7082 Gear set, differential (output gears (2)/ spider gears (3))/ differential output shafts (2)/ 1.5x6mm pin (3)/ 1.5x8mm pin (2)
5130 **Oil, differential (100K wt) (0.7 oz (20cc))**
5135 **Oil, differential (10K wt)**
5136 Oil, differential (30K wt)
5137 **Oil, differential (50K wt)**
7014X **Rebuild kit, center differential (includes o-rings and diff gear covers)**
7079 Ring gear, differential/ pinion gear, differential

Driveline Components

7034 Axle carriers, left & right (2 each)
7052 **Drive cups, inner (2) (steel constant-velocity driveshafts)**
7051 Driveshaft assembly (1) left or right (fully assembled, ready to install)/ 3x10mm screw pin (1)
7051X **Driveshaft, steel constant-velocity (assembled) (4)**
7053 **Driveshaft, steel constant-velocity (shaft only, 48mm)/ drive cup pin (1)**
7250R **Driveshafts, center (steel constant-velocity) front (1), rear (1) (fully assembled)**
7056 Half shafts, center front (1), center rear (1) (internal splined half shafts (2)/external splined half shaft) (2))/ metal u-joints (4)
7050 Half shafts, left or right (internal splined half shaft (2)/external splined half shaft) (2))/ metal u-joints (4)
7055 **Rebuild kit, steel constant-velocity driveshafts (includes pins, o-rings, stub axles for driveshafts assemblies)**
7054 Stub axle, steel (2)/ yokes (2) (assembled)
7154 Wheel hubs, hex (4)/ axle pins (1.5x8mm) (4)
7154X **Wheel hubs, hex, aluminum (blue-anodized) (4)**
7057 Yokes, differential and transmission (2)/ 3x10mm screw pin (2)

Front Suspension

7033X **Aluminum caps, pivot ball (threaded aluminum, hard-anodized with PTFE-coating) (8)/ hex wrench, 5mm**
7034 Axle carriers, left & right (2 each)
7023 Bulkhead tie bars, front & rear (blue-anodized aluminum)/ 2.5x6 CS (1)
7030X Bulkhead, front (left & right halves)/ 3x10mm BCS (4)
7028 Hollow balls (20)
7028X **Hollow balls, steel (machined)**
7033 Pivot balls (4)/ pivot ball caps (4)
7018 Push rod (molded composite) (red) (4)/ hollow balls (8)
7018X **Push rods, aluminum (red-anodized) (4) (assembled with rod ends)**
7155 Rocker arm post, steel (4)
7158 Rocker arm set, progressive-2/ plastic bushings (8)
2523 Screws, 2.5x10mm countersunk machine (hex drive) (6)
7043 Steering arm (upper & lower)/ steering link/ servo horn/ servo saver/ servo saver spring/ servo horn mount/ ball stud (2)/ shock mounts, front & rear/ 2.5x18mm CS (4)
7031 Suspension arm set, front (includes upper right & left and lower right & left arms)
7021 Suspension pin set (front or rear), 2x46mm (2), 2x14mm (4)
7038 Toe link, front & rear (molded composite) (red) (4)/ hollow balls (8)
7038X **Toe links, aluminum (red-anodized) (4) (assembled with rod ends and threaded inserts)**

Hardware

5124 **Ball bearings, blue rubber sealed (4x7x2.5mm) (2)**
7019 Ball bearings, blue rubber sealed (4x8x3mm) (2)
5114 **Ball bearings, blue rubber sealed (5x8x2.5mm) (2)**
7020 Ball bearings, blue rubber sealed (8x12x3.5mm) (2)
5123 Bellcrank bushings (plastic) (4x7x2.5mm) (4)
2545 Bellcrank bushings (plastic) (5x8x2.5mm) (4)
1834 Body clips (12) (standard size)
5150 E-clips, 1.5mm (24)
5477 Flat wrench, 5mm (blue-anodized aluminum)
7028 Hollow balls (20)
7028X **Hollow balls, steel (machined)**
2745 Nuts, 3mm nylon locking (12)
3647 Nuts, 4mm flanged nylon locking (steel, serrated) (8)
1747R **Nuts, aluminum, flanged, serrated (4mm) (blue-anodized) (4)**
1747G **Nuts, aluminum, flanged, serrated (4mm) (green-anodized) (4)**
1747P **Nuts, aluminum, flanged, serrated (4mm) (pink-anodized) (4)**
7155 Rocker arm post, steel (4)
7059 Rod ends (8)/ hollow balls (8)
3229 Screws, 2.5x10mm cap-head machine (hex drive) (6)
2523 Screws, 2.5x10mm countersunk machine (hex drive) (6)
3236 Screws, 2.5x12mm cap-head machine (6)
2526 Screws, 2.5x12mm countersunk machine (hex drive) (6)
3215 Screws, 2.5x6mm cap-head machine (hex drive) (6)
3965 Screws, 2.5x8mm cap-head machine (6)
2577 Screws, 3x10mm button-head machine (hex drive) (6)
3159 Screws, 3x10mm cap-head machine (hex drive) (6)/ lock washers (6)/ hex wrench
2578 Screws, 3x12mm button-head machine (hex drive) (6)
2579 Screws, 3x15mm button-head machine (hex drive) (6)
2575 Screws, 3x6mm button-head machine (hex drive) (6)
2576 Screws, 3x8mm button-head machine (hex drive) (6)
2743 Set (grub) screws, 3mm hardened (12)

Manuals

7097 Owner's manual, 1/16 Slash 4WD (model 7005)

Motors & Electronics

2082	Gear set (for 2080 micro waterproof servo)
2082X	**Gear set, metal (for 2080X micro waterproof servo)**
3374	**Heat sink, Velineon® 380 brushless motor, aluminum (blue-anodized)**
7060	**Motor mount, finned aluminum**
7360	Motor mount, finned aluminum (for 550 motors)
3785	Motor, Titan® 12T (12-Turn, 550 size)
3371	**Motor, Velineon® Mini Maxx® 380, brushless (assembled with 16-gauge wire and gold-plated connectors)**
2081	Servo case/ gaskets (for 2080 micro waterproof servo)
2081X	**Servo case/ gaskets (for 2080X metal gear, micro, waterproof servo)**
2080	Servo, micro, waterproof
2080X	**Servo, micro, waterproof, metal gear**
3370	**Velineon® VXL-3m Brushless Power System, waterproof (includes waterproof VXL-3m ESC and Velineon 380 motor)**
3375	**VXL-3m Electronic Speed Control, waterproof (brushless)**
3024R	XL 2.5 Electronic Speed Control, waterproof

Radio System, Batteries & Chargers

2820X	**2200mAh 7.4v 2-Cell 25C LiPo Battery**
2976	**AC to DC converter, 40W**
2938X	**Adapter, Traxxas® iD® LiPo battery (adapts Traxxas iD batteries to separate balance ports)**
2943	**Battery charge indicators (green (4), blue (4), grey (4))**
6548	Battery door, transmitter (replacement for #6516, 6517, 6528, 6529, 6530 transmitters)
2914	**Battery, Power Cell AA Alkaline (4)**
2925X	Battery, Series 1 Power Cell, 1200mAh (NiMH, 6-C flat, 7.2V, 2/3A)
2974	Charger, DC, 2 amp (5 - 7 cell, 6.0 - 8.4 volt, NiMH)
2972	**Charger, EZ-Peak® Dual, 100W, NiMH/LiPo with iD® Auto Battery Identification**
2973	**Charger, EZ-Peak® Live Dual, 200W, NiMH/LiPo with iD® Auto Battery Identification**
2971	**Charger, EZ-Peak® Live, 100W, NiMH/LiPo with iD® Auto Battery Identification**
2970	**Charger, EZ-Peak® Plus, 4 amp, NiMH/LiPo with iD® Auto Battery Identification**
6543	**Connector, power tap (with cable) (short)/ wire tie**
2978	**Fuse, charger, 5A (2) (for #2974, 2975, 2977)**
2082	Gear set (for 2080 micro waterproof servo)
2082X	**Gear set, metal (for 2080X micro waterproof servo)**
2968X	**LiPo cell voltage checker/balancer (includes #2938X adapter for Traxxas® iD® batteries)**
2968	**LiPo cell voltage checker/balancer (requires #2938X adapter for Traxxas® iD® batteries)**
6535	**Mount, temperature sensor (electric motors)/ wire tie/ thermal pad**
6519	Receiver, micro, TQ 2.4GHz (3-channel)
6533	**Receiver, micro, TQi 2.4GHz with telemetry & TSM (5-channel)**
6522	**Sensor, RPM (short)/ 3x4mm BCS (2)**
6523	**Sensor, temperature and voltage (short)**
2081	Servo case/ gaskets (for 2080 micro waterproof servo)
2081X	**Servo case/ gaskets (for 2080X metal gear, micro, waterproof servo)**
2080	Servo, micro, waterproof
2080X	**Servo, micro, waterproof, metal gear**
6538	**Telemetry trigger magnet holders, spur gear/ magnet, 5x2mm (1)/ 3x8mm CCS (3)/ 3x10mm CCS (3)**
6540	**Telemetry trigger magnet, 5X2mm (1)**
6509R	**TQi 2.4 GHz High Output radio system, 2-channel, Traxxas Link™ enabled, TSM (2-ch transmitter, 5-ch micro receiver)**
6507R	**TQi 2.4 GHz High Output radio system, 4-channel with Traxxas Link™ Wireless Module, TSM (4-ch transmitter, 5-ch micro receiver)**
6516	Transmitter, TQ 2.4GHz, 2-channel (transmitter only)
6528	**Transmitter, TQi Traxxas Link™ enabled, 2.4GHz high output, 2-channel (transmitter only)**
6529	**Transmitter, TQi Traxxas Link™ enabled, 2.4GHz high output, 3-channel (transmitter only)**
6530	**Transmitter, TQi Traxxas Link™ enabled, 2.4GHz high output, 4-channel (transmitter only)**
6511	**Traxxas Link™ Wireless Module**
3375	**VXL-3m Electronic Speed Control, waterproof (brushless)**
3064X	**Wire harness, parallel battery connection (compatible with Traxxas® High Current Connector, NiMH only)**
3024R	XL 2.5 Electronic Speed Control, waterproof

Ready-To-Race Model

70054-1	Slash: 1/16-Scale Pro 4WD Short Course Racing Truck with TQ 2.4GHz radio

Rear Suspension

7033X	**Aluminum caps, pivot ball (threaded aluminum, hard-anodized with PTFE-coating) (8)/ hex wrench, 5mm**
7034	Axle carriers, left & right (2 each)
7023	Bulkhead tie bars, front & rear (blue-anodized aluminum)/ 2.5x6 CS (1)
7029X	Bulkhead, rear (left & right halves)/ 3x10mm BCS (4)
7028	Hollow balls (20)
7028X	**Hollow balls, steel (machined)**
7033	Pivot balls (4)/ pivot ball caps (4)
7018	Push rod (molded composite) (red) (4)/ hollow balls (8)
7018X	**Push rods, aluminum (red-anodized) (4) (assembled with rod ends)**
7155	Rocker arm post, steel (4)
7158	Rocker arm set, progressive-2/ plastic bushings (8)
2523	Screws, 2.5x10mm countersunk machine (hex drive) (6)
7043	Steering arm (upper & lower)/ steering link/ servo horn/ servo saver/ servo saver spring/ servo horn mount/ ball stud (2)/ shock mounts, front & rear/ 2.5x18mm CS (4)
7032	Suspension arm set, rear (includes upper right & left and lower right & left arms) (1/16 Slash)
7021	Suspension pin set (front or rear), 2x46mm (2), 2x14mm (4)
7038	Toe link, front & rear (molded composite) (red) (4)/ hollow balls (8)
7038X	**Toe links, aluminum (red-anodized) (4) (assembled with rod ends and threaded inserts)**

Shocks (GTR)

7066X	**Body, GTR shock (hard-anodized, PTFE-coated aluminum) (1)**
7066	Body, GTR shock (molded composite) (2)
7065	Caps and spring retainers, GTR shock (upper cap (2)/ hollow balls (4)/ bottom cap (2)/ upper retainer (2)/ lower retainer (2))
7028	Hollow balls (20)
7067	Piston, damper (2x0.5mm hole, red) (4)/ travel limiters (4)
7062	Rebuild kit, GTR composite shocks (x-rings, bladders, pistons, e-clips, shock rod ends, hollow balls) (renews 2 shocks)
7063	Shaft, GTR shock (2)
7063T	**Shaft, GTR shock (TiN-coated) (4)**
7061	Shocks, GTR composite (assembled, without springs) (2)
7061X	**Shocks, GTR hard anodized, PTFE-coated bodies with TiN shafts (fully assembled, without springs) (4)**

Slipper Clutch Components

7152	Slipper clutch, complete (includes slipper clutch hub, clutch pad, spring, 3.0mm NL, 1.5x6mm pin)

Springs

7140	**Spring, shock (GTR) (0.82 rate, double orange) (1 pair)**
7141	**Spring, shock (GTR) (0.88 rate, double green) (1 pair)**
7142	Spring, shock (GTR) (0.94 rate, double tan) (1 pair)
7143	Spring, shock (GTR) (1.02 rate, double black) (1 pair)

Spur Gears & Pinion Gears

2428	**Gear, 12-T pinion (48-pitch)/ set screw**
2416	**Gear, 16-T pinion (48-pitch) / set screw**
1918	**Gear, 18-T pinion (48-pitch) / set screw**
2419	**Gear, 19-T pinion (48-pitch) / set screw**
2423	**Gear, 23-T pinion (48-pitch) / set screw**
2426	**Gear, 26-T pinion (48-pitch)/set screw**
2431	**Gear, 31-T pinion (48-pitch) / set screw**
4725	Gear, pinion (25-tooth) (48-pitch) / set screw
4728	**Gear, pinion (28-tooth) (48-pitch)/ set screw**
7045R	**Spur gear, 45-tooth**
7046R	Spur gear, 50-tooth
7047R	**Spur gear, 55-tooth**

Steering Components

5114	**Ball bearings, blue rubber sealed (5x8x2.5mm) (2)**
2545	Bellcrank bushings (plastic) (5x8x2.5mm) (4)
7043	Steering arm (upper & lower)/ steering link/ servo horn/ servo saver/ servo saver spring/ servo horn mount/ ball stud (2)/ shock mounts, front & rear/ 2.5x18mm CS (4)
7038	Toe link, front & rear (molded composite) (red) (4)/ hollow balls (8)
7038X	**Toe links, aluminum (red-anodized) (4) (assembled with rod ends and threaded inserts)**

Suspension Linkage

7028	Hollow balls (20)
7028X	**Hollow balls, steel (machined)**
7018	Push rod (molded composite) (red) (4)/ hollow balls (8)
7018X	**Push rods, aluminum (red-anodized) (4) (assembled with rod ends)**
7021	Suspension pin set (front or rear), 2x46mm (2), 2x14mm (4)

1/16 SLASH® 4X4 (70054-1)

7038	Toe link, front & rear (molded composite) (red) (4)/ hollow balls (8)
7038X	**Toe links, aluminum (red-anodized) (4) (assembled with rod ends and threaded inserts)**

Tires & Wheels

7073A	Tires and wheels, assembled, glued (SCT satin chrome wheels, red beadlock style, SCT off-road racing tires, foam inserts) (1 each, right & left)
7073	Tires and wheels, assembled, glued (SCT satin chrome wheels, SCT off-road racing tires, foam inserts) (1 each, right & left)
7071	Tires, off-road racing, SCT dual profile (1 each, right & left)/ foam inserts (2)
7154	Wheel hubs, hex (4)/ axle pins (1.5x8mm) (4)
7154X	**Wheel hubs, hex, aluminum (blue-anodized) (4)**
7072	Wheels, SCT satin chrome, beadlock style, dual profile (1.8" inner, 1.4" outer) (2)
7072A	Wheels, SCT satin chrome, red beadlock style, dual profile (1.8" inner, 1.4" outer) (2)

Transmission Components

7077R	**Cover, gear/ motor mount hinge post/ 3x10mm CS with split and flat washers (1)/ 3x8mm BCS (1)**
7379R	Cover, gear/motor plate access cover/ motor mount hinge post / 3x10mm CS w/split and flat washers (1) / 2.5x4mm CS (2) / 3x8mm BCS (1) (for 550 motors)
7014	**Differential kit, center (complete)**
7093	Gear set, transmission (includes 18T, 25T input gears, 13T idler gear (steel), 35T output gear, M3x13.75 screw pin)
7091	Gearbox halves, front & rear
7092	Input shaft/ output shaft
7090	**Plate, motor**
7380	Plate, motor (for 550 motor)
7014X	**Rebuild kit, center differential (includes o-rings and diff gear covers)**
7152	Slipper clutch, complete (includes slipper clutch hub, clutch pad, spring, 3.0mm NL, 1.5x6mm pin)

Traxxas Tools

3433X	**Body reamer (aluminum handle)**
3433	**Body reamer (plastic handle)**
3436	**Cap, body reamer**
3432	**Scissors, curved tip**
3431	**Scissors, straight tip**
8712	**Speed Bit Essentials Set, hex and nut driver, 7-piece, includes premium handle (medium), travel pouch, hex drivers (straight: 1.5mm, 2.0mm, 2.5mm) and nut drivers (5.0mm, 5.5mm, 7.0mm, and 8.0mm), 1/4" drive**
8721	**Speed bit handle, medium (one piece)**
8720	**Speed bit handle, premium, large (rubber overmold)**
8722	**Speed bit handle, premium, medium (rubber overmold)**
8710	**Speed Bit Master Set, hex and nut driver, 13-piece, includes premium handle (medium), travel pouch, hex drivers (straight: 1.5mm, 2.0mm, 2.5mm, 3.0mm), (ball-end: 2.0mm, 2.5mm, 3.0mm), and nut drivers (4.00mm, 4.50mm, 5.00mm, 5.50mm, 7.00mm, 8.00mm),**
8711	**Speed Bit Master Set, hex driver, 7-piece straight and ball end, includes premium handle (medium), travel pouch, hex drivers (straight: 1.5mm, 2.0mm, 2.5mm, 3.0mm) (ball end: 2.0mm, 2.5mm, 3.0mm), 1/4" drive**
8719	**Speed Bit Master Set, nut driver, 6-piece, includes premium handle (medium), travel pouch, and nut drivers (4.0mm, 4.5mm, 5.0mm, 5.5mm, 7.0mm, 8.0mm), 1/4" drive**
8716	**Speed Bit Set, hex driver, 2-piece ball-end (2.0mm, 2.5mm), 1/4" drive**
8716X	**Speed Bit Set, hex driver, 3-piece ball-end (2.0mm, 2.5mm, 3.0mm), 1/4" drive**
8715	**Speed Bit Set, hex driver, 3-piece straight (1.5mm, 2.0mm, 2.5mm), 1/4" drive**
8715X	**Speed Bit Set, hex driver, 4-piece straight (1.5mm, 2.0mm, 2.5mm, 3.0mm), 1/4" drive**
3415	**Tool set with pouch (includes 1.5mm, 2.0mm, 2.5mm, 3.0mm, 3.5mm, 4mm drivers/ 4mm, 5mm, 5.5mm, 7mm and 8mm nut drivers/ 2mm, 4mm, and 5mm slotted screwdrivers/ #00 Phillips, #0 Phillips, and #1 Phillips screwdrivers/ 4mm and 8mm wrench/ driver handle**

Turnbuckles & Threaded Rods

7028	Hollow balls (20)
7028X	**Hollow balls, steel (machined)**
7018	Push rod (molded composite) (red) (4)/ hollow balls (8)
7018X	**Push rods, aluminum (red-anodized) (4) (assembled with rod ends)**
7038	Toe link, front & rear (molded composite) (red) (4)/ hollow balls (8)
7038X	**Toe links, aluminum (red-anodized) (4) (assembled with rod ends and threaded inserts)**

If you have questions or need technical assistance, call Traxxas at:

1-888-TRAXXAS

(1-888-872-9927) (U.S. residents only)

For orders, calls outside the U.S., and other information, call 972-549-3000, or fax to 972-549-3011 e-mail Traxxas at support@Traxxas.com

TRAXXAS.com

REV. 201002 1245

1/16 E-REVO

MODEL 71054-1

1/16 SCALE 4WD
MONSTER TRUCK



SERIES 1, 6-CELL , 1200 MAH
NIMH POWER CELL BATTERY

TITAN® 12-TURN 550
MODIFIED MOTOR

TQ 2.4GHz TRANSMITTER

A NEW CATEGORY OF OFF-ROAD EXCITEMENT

Traxxas sets the standard for power, performance and innovation. All the quality and capability you expect from Traxxas is available in 1/16 scale with the 1/16 E-Revo. At 14 inches long, this E-Revo is about half the size of the 1/10-scale E-Revo. But don't call it a "mini"—this is a whole new category of R/C performance and fun that no mere mini-model can match. Beneath the factory-finished polycarbonate shell, you'll find the winning suspension technology of the eight-time National Champion Traxxas Revo®, high-torque Titan 550 power, and the convention-busting innovation of the E-Revo.

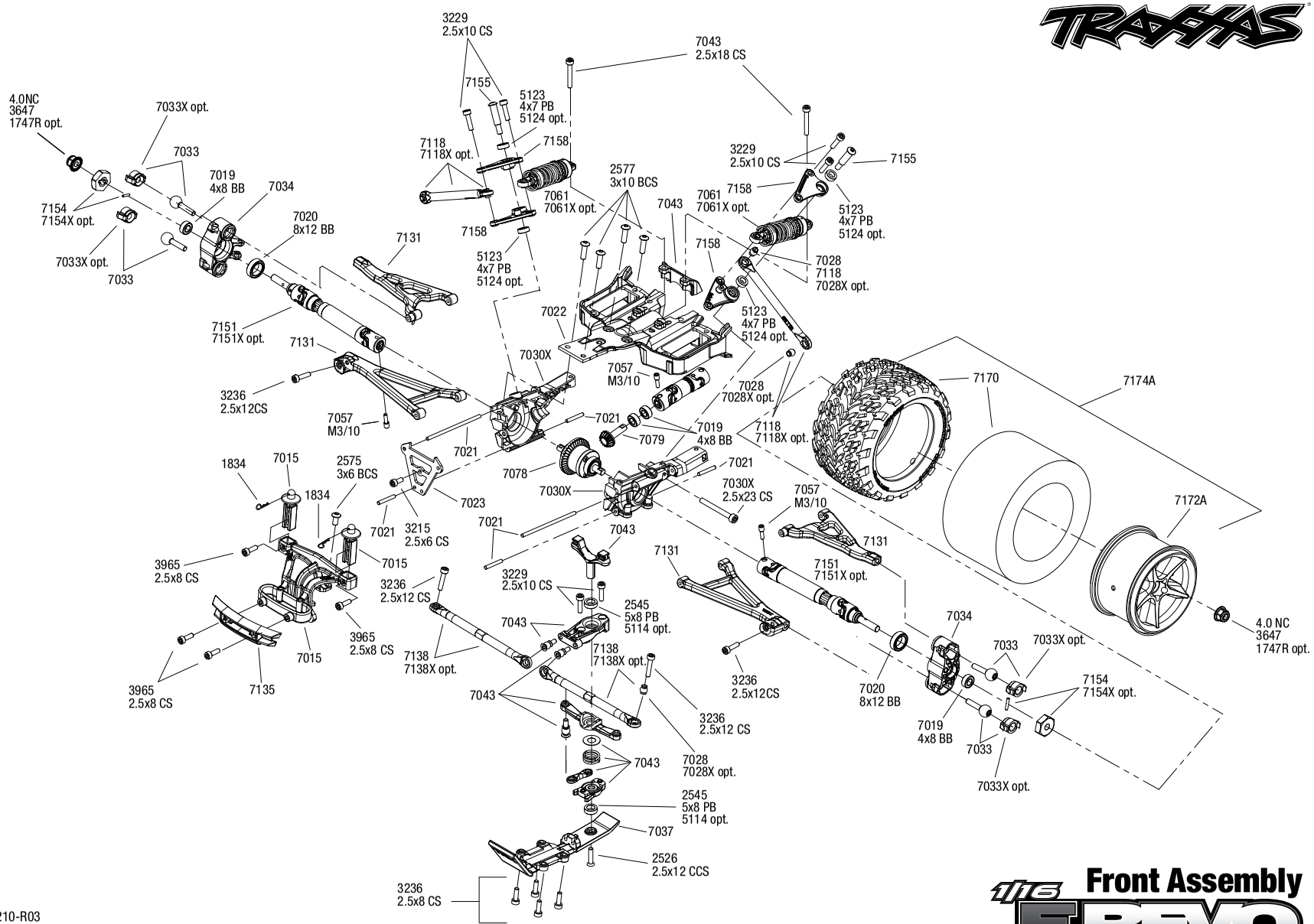

REV 131210-R03

Specifications on this page are subject to change without notice. Every attempt has been made to ensure the accuracy of this drawing, however Traxxas cannot be held responsible for typographical or other errors.

See Parts List for a complete listing of optional accessories.

1/16 Front Assembly
1/16 E-REVO

Questions? Call toll-free, 1-888-TRAXXAS

1/16 E-REVO

Chassis Assembly

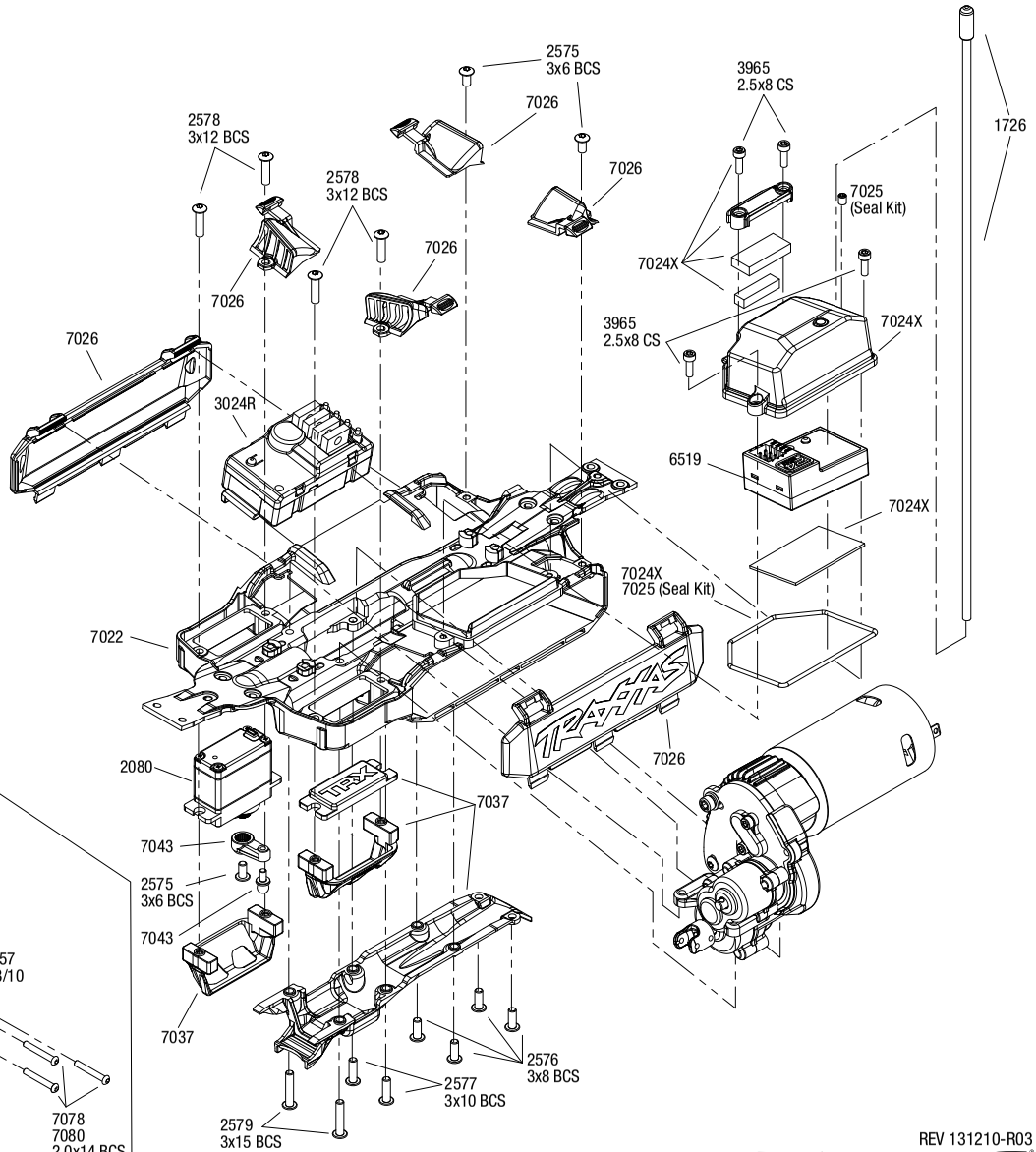

Differential Assembly

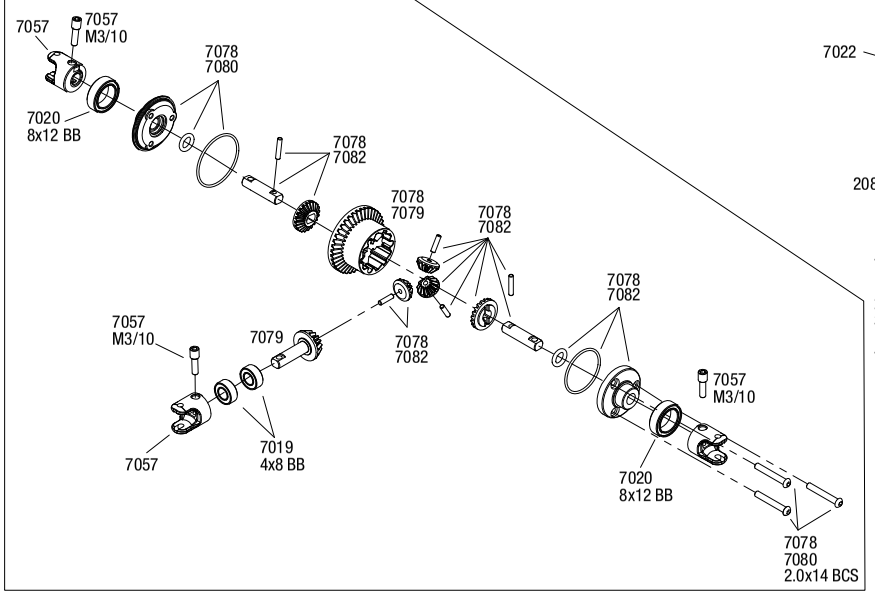

Specifications on this page are subject to change without notice. Every attempt has been made to ensure the accuracy of this drawing, however Traxxas cannot be held responsible for typographical or other errors.

See Parts List for a complete listing of optional accessories.

REV 131210-R03

TRAXXAS

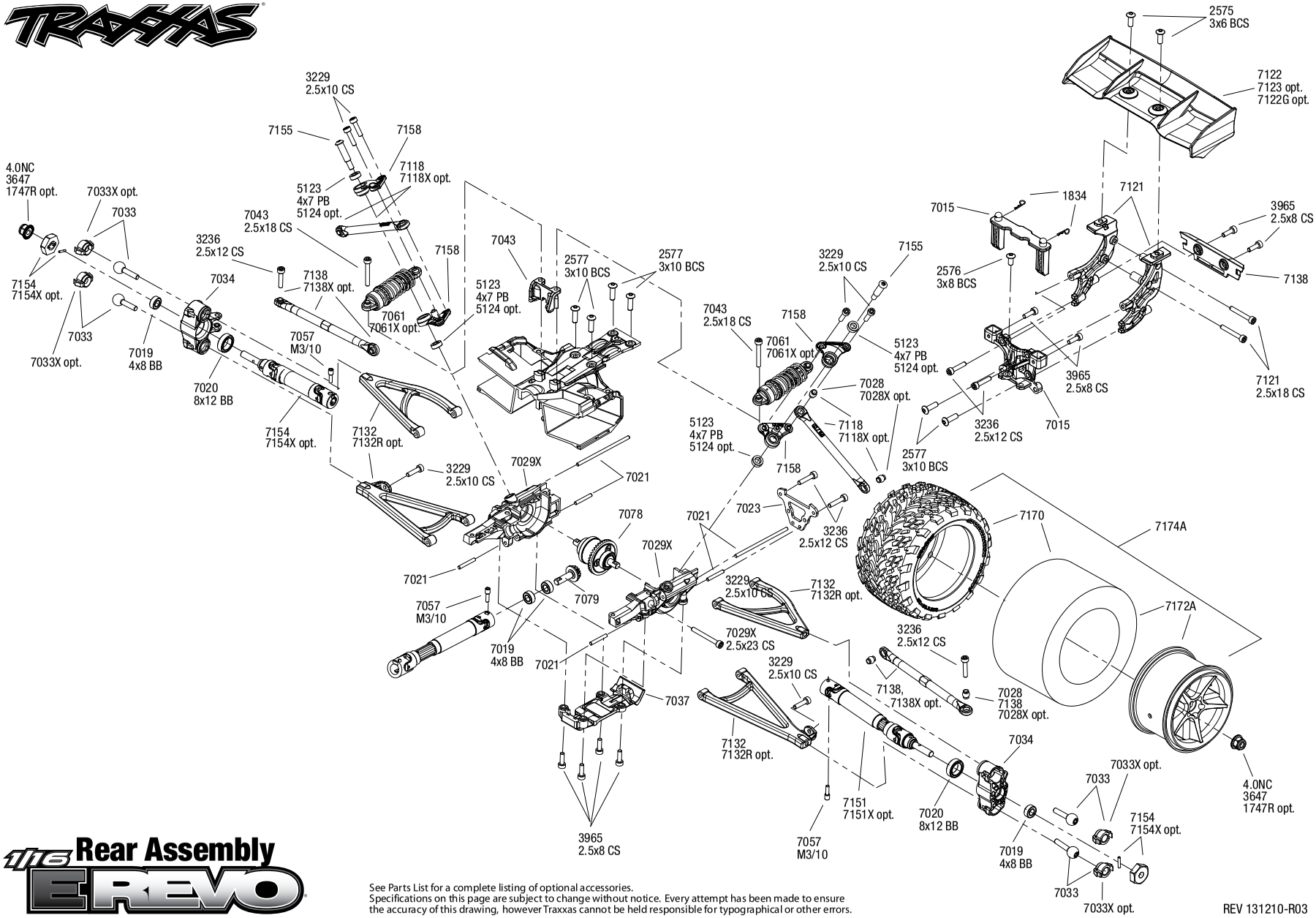

1/16 Rear Assembly E-REVO

See Parts List for a complete listing of optional accessories.
Specifications on this page are subject to change without notice. Every attempt has been made to ensure the accuracy of this drawing, however Traxxas cannot be held responsible for typographical or other errors.

REV 131210-R03

1/16 E-REVO® (71054-1)

1/16 E-REVO Transmission Assembly

REV 131210-R03

Specifications on this page are subject to change without notice. Every attempt has been made to ensure the accuracy of this drawing, however Traxxas cannot be held responsible for typographical or other errors.

See Parts List for a complete listing of optional accessories.

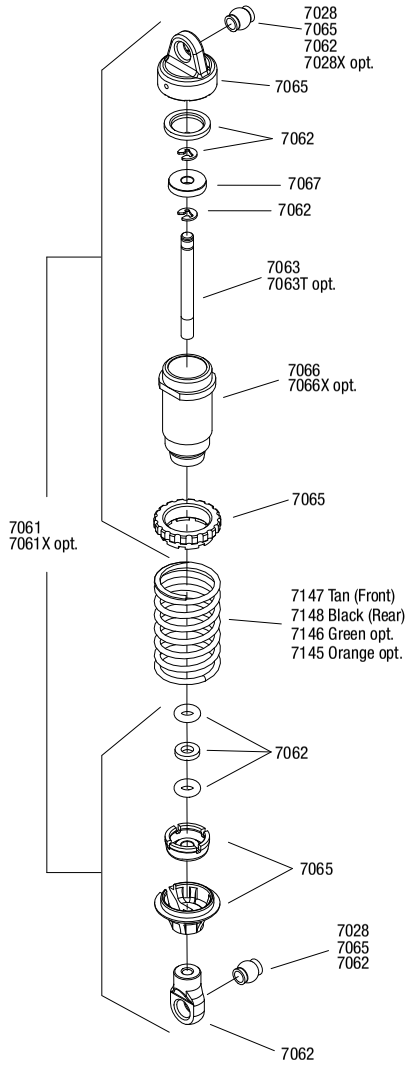

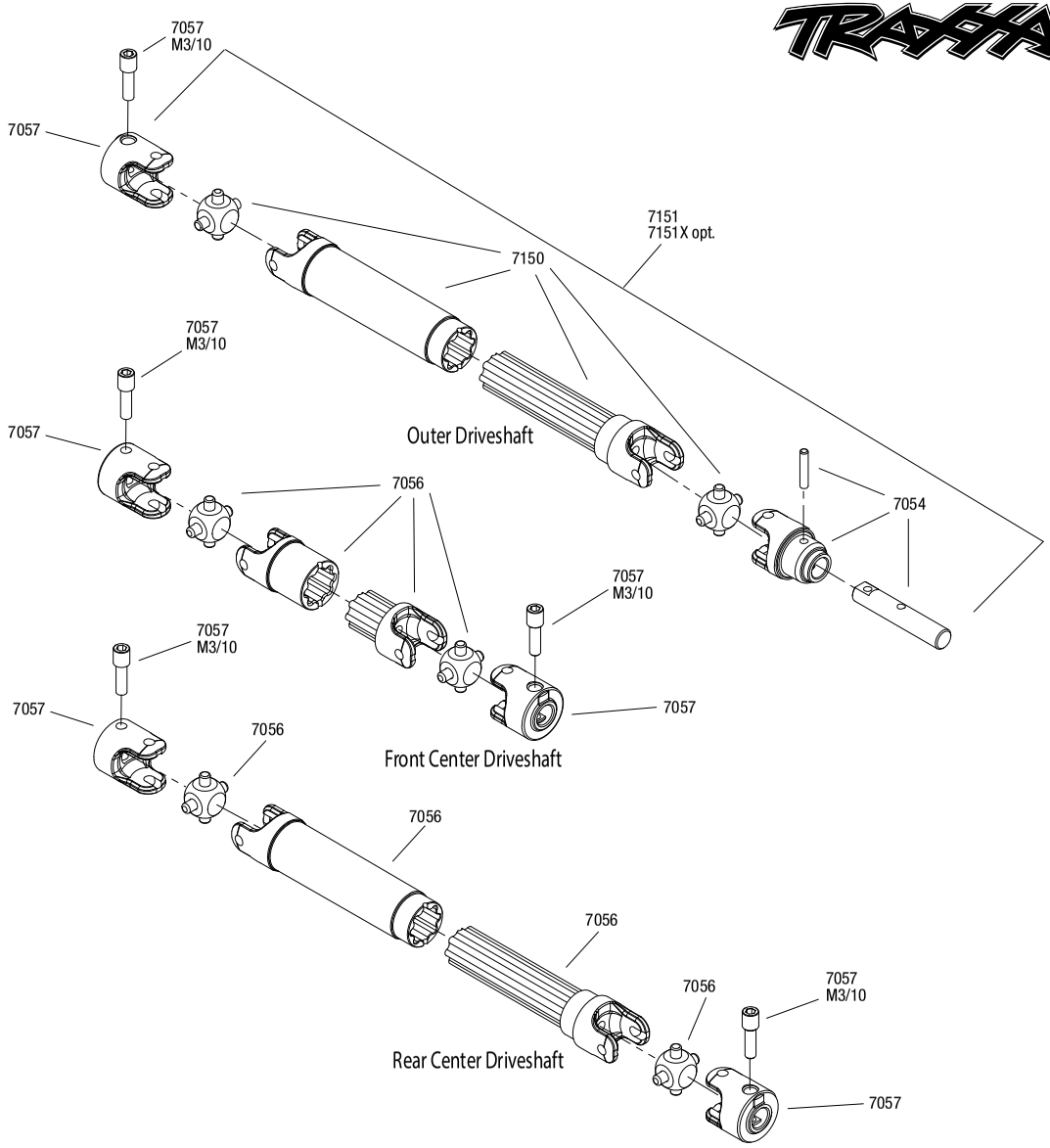

Driveshaft Assembly

1/16 E-REVO

REV 131210-R03

Specifications on this page are subject to change without notice.
Every attempt has been made to ensure the accuracy of this drawing, however Traxxas cannot be held responsible for typographical or other errors. See Parts List for a complete listing of optional accessories.

1/16 E-REVO® (71054-1)

PARTS SHOWN IN BOLD ARE OPTIONAL ACCESSORIES.

Part categories and individual part listings are arranged alphabetically.

Bearings & Bushings

5124	**Ball bearings, blue rubber sealed (4x7x2.5mm) (2)**
7019	Ball bearings, blue rubber sealed (4x8x3mm) (2)
5114	**Ball bearings, blue rubber sealed (5x8x2.5mm) (2)**
7020	Ball bearings, blue rubber sealed (8x12x3.5mm) (2)

Body & Accessories

1926	Antenna caps, vinyl (2)/ antenna spool
1726	Antenna, tube (1)/ vinyl antenna cap (1)/ wire retainer (1)
1834	Body clips (12) (standard size)
7015	Body mounts, front & rear/ body mount posts, front & rear
4915	Body washers, foam adhesive (10)
6716	**Body washers, foam, 2mm (2)/ 3mm (2)/ 4mm (4)**
7111	**Body, 1/16 E-Revo® (clear, requires painting)/ grille and lights decal sheet**
2514	Decal sheet, racing sponsors
7114	Decal sheets, 1/16 E-Revo®
9950	Official Team Traxxas® racing decal set (flag logo/ 6-color)
7121	Wing mount/ hardware (1/16 E-Revo®)
7122	Wing, 1/16 E-Revo® (black)/ decal sheet
7122G	**Wing, 1/16 E-Revo® (Exo-carbon finish)/ decal sheet**
7123	**Wing, 1/16 E-Revo® (white)/ decal sheet**

Bumpers & Skidplates

7135	Bumpers, front (1)/ rear (1)
7037	Skidplate set, front (1)/ rear (1)/ transmission (1)/ steering servo guards (2) / steering servo cover plate (1)

Chassis & Attachments

7015	Body mounts, front & rear/ body mount posts, front & rear
7024X	Box, receiver (sealed)/ wire cover/ foam pads, upper & lower/ silicone grease/ 2.5x8 CS (4)/ 3x4 GS (1)
7023	Bulkhead tie bars, front & rear (blue-anodized aluminum)/ 2.5x6 CS (1)
7030X	Bulkhead, front (left & right halves)/ 3x10mm BCS (4)
7029X	Bulkhead, rear (left & right halves)/ 3x10mm BCS (4)
7022	Chassis
7026	Door, battery compartment (1)/ vents, battery compartment (1 pair) (fits right or left side)
7186	**LED lights, light harness (4 clear, 4 red)/ bumpers, front & rear/ wire ties (3) (requires power supply #7286)**
7025	Seal kit, receiver box (includes o-ring, seals, and silicone grease)
7037	Skidplate set, front (1)/ rear (1)/ transmission (1)/ steering servo guards (2) / steering servo cover plate (1)
7043	Steering arm (upper & lower)/ steering link/ servo horn/ servo saver/ servo saver spring/ servo horn mount/ ball stud (2)/ shock mounts, front & rear/ 2.5x18mm CS (4)
7184	**Wheelie bar, assembled**
7121	Wing mount/ hardware (1/16 E-Revo®)

Differential Components

7019	Ball bearings, blue rubber sealed (4x8x3mm) (2)
7020	Ball bearings, blue rubber sealed (8x12x3.5mm) (2)
7080	Cover plates, differential (front or rear)/ gaskets (2)/ o-rings (2)/ 2x14mm BCS (4)
7078	Differential assembly, complete
7014	**Differential kit, center (complete)**
5136X	**Differential oil kit (1 each: 10K, 30K, 50K weights)**
7082	Gear set, differential (output gears (2)/ spider gears (3))/ differential output shafts (2)/ 1.5x6mm pin (3)/ 1.5x8mm pin (2)
5130	**Oil, differential (100K wt) (0.7 oz (20cc))**
5135	**Oil, differential (10K wt)**
5136	Oil, differential (30K wt)
5137	**Oil, differential (50K wt)**
7014X	**Rebuild kit, center differential (includes o-rings and diff gear covers)**
7079	Ring gear, differential/ pinion gear, differential

Driveline Components

7034	Axle carriers, left & right (2 each)
7052	**Drive cups, inner (2) (steel constant-velocity driveshafts)**
7151	Driveshaft assembly (1) left or right (fully assembled, ready to install)/ 3x10mm screw pin (1)
7151X	**Driveshaft, 1/16 E-Revo (steel constant-velocity) (assembled) (4)**
7153	**Driveshaft, steel constant-velocity, 1/16 E-Revo® (shaft only, 68mm)/ drive cup pin (1)**
7250R	**Driveshafts, center (steel constant-velocity) front (1), rear (1) (fully assembled)**
7056	Half shafts, center front (1), center rear (1) (internal splined half shafts (2)/external splined half shaft) (2))/ metal u-joints (4)
7150	Half shafts, left or right (internal splined half shaft (2)/external splined half shaft) (2))/ metal u-joints (4)
7055	**Rebuild kit, steel constant-velocity driveshafts (includes pins, o-rings, stub axles for driveshafts assemblies)**
7054	Stub axle, steel (2)/ yokes (2) (assembled)
7154	Wheel hubs, hex (4)/ axle pins (1.5x8mm) (4)
7154X	**Wheel hubs, hex, aluminum (blue-anodized) (4)**
7057	Yokes, differential and transmission (2)/ 3x10mm screw pin (2)

Front Suspension

7033X	**Aluminum caps, pivot ball (threaded aluminum, hard-anodized with PTFE-coating) (8)/ hex wrench, 5mm**
7034	Axle carriers, left & right (2 each)
7023	Bulkhead tie bars, front & rear (blue-anodized aluminum)/ 2.5x6 CS (1)
7030X	Bulkhead, front (left & right halves)/ 3x10mm BCS (4)
7028	Hollow balls (20)
7028X	**Hollow balls, steel (machined)**
7033	Pivot balls (4)/ pivot ball caps (4)
7118G	**Push rod (molded composite) (green) (4)/ hollow balls (8)**
7018	Push rod (molded composite) (red) (4)/ hollow balls (8)
7118	Push rod (molded composite) (red) (4)/ hollow balls (8)
7118X	**Push rods, aluminum (red-anodized) (4) (assembled with rod ends)**
7155	Rocker arm post, steel (4)
7158	Rocker arm set, progressive-2/ plastic bushings (8)
7043	Steering arm (upper & lower)/ steering link/ servo horn/ servo saver/ servo saver spring/ servo horn mount/ ball stud (2)/ shock mounts, front & rear/ 2.5x18mm CS (4)
7131	Suspension arm set, front (includes upper right & left and lower right & left arms)
7021	Suspension pin set (front or rear), 2x46mm (2), 2x14mm (4)

Hardware

5124	**Ball bearings, blue rubber sealed (4x7x2.5mm) (2)**
7019	Ball bearings, blue rubber sealed (4x8x3mm) (2)
5114	**Ball bearings, blue rubber sealed (5x8x2.5mm) (2)**
7020	Ball bearings, blue rubber sealed (8x12x3.5mm) (2)
5123	Bellcrank bushings (plastic) (4x7x2.5mm) (4)
2545	Bellcrank bushings (plastic) (5x8x2.5mm) (4)
1834	Body clips (12) (standard size)
5150	E-clips, 1.5mm (24)
5477	Flat wrench, 5mm (blue-anodized aluminum)
7028	Hollow balls (20)
7028X	**Hollow balls, steel (machined)**
2745	Nuts, 3mm nylon locking (12)
3647	Nuts, 4mm flanged nylon locking (steel, serrated) (8)
1747R	**Nuts, aluminum, flanged, serrated (4mm) (blue-anodized) (4)**
1747G	**Nuts, aluminum, flanged, serrated (4mm) (green-anodized) (4)**
1747P	**Nuts, aluminum, flanged, serrated (4mm) (pink-anodized) (4)**
7155	Rocker arm post, steel (4)
7059	**Rod ends (8)/ hollow balls (8)**
3229	Screws, 2.5x10mm cap-head machine (hex drive) (6)
2523	Screws, 2.5x10mm countersunk machine (hex drive) (6)
3236	Screws, 2.5x12mm cap-head machine (6)
2526	Screws, 2.5x12mm countersunk machine (hex drive) (6)
3215	Screws, 2.5x6mm cap-head machine (hex drive) (6)
3965	Screws, 2.5x8mm cap-head machine (6)
2577	Screws, 3x10mm button-head machine (hex drive) (6)
3159	Screws, 3x10mm cap-head machine (hex drive) (6)/ lock washers (6)/ hex wrench
2578	Screws, 3x12mm button-head machine (hex drive) (6)
2579	Screws, 3x15mm button-head machine (hex drive) (6)
2575	Screws, 3x6mm button-head machine (hex drive) (6)
2576	Screws, 3x8mm button-head machine (hex drive) (6)
2743	Set (grub) screws, 3mm hardened (12)

Manuals

7198	Owner's manual, 1/16 E-Revo

Motors & Electronics

2082	Gear set (for 2080 micro waterproof servo)
2082X	**Gear set, metal (for 2080X micro waterproof servo)**
3374	**Heat sink, Velineon® 380 brushless motor, aluminum (blue-anodized)**
7060	**Motor mount, finned aluminum**

7360 Motor mount, finned aluminum (for 550 motors)
3785 Motor, Titan® 12T (12-Turn, 550 size)
3371 Motor, Velineon® Mini Maxx® 380, brushless (assembled with 16-gauge wire and gold-plated connectors)
2081 Servo case/ gaskets (for 2080 micro waterproof servo)
2081X Servo case/ gaskets (for 2080X metal gear, micro, waterproof servo)
2080 Servo, micro, waterproof
2080X Servo, micro, waterproof, metal gear
3370 Velineon® VXL-3m Brushless Power System, waterproof (includes waterproof VXL-3m ESC and Velineon 380 motor)
3375 VXL-3m Electronic Speed Control, waterproof (brushless)
3024R XL 2.5 Electronic Speed Control, waterproof

Radio System, Batteries & Chargers

2820X 2200mAh 7.4v 2-Cell 25C LiPo Battery
2976 AC to DC converter, 40W
2938X Adapter, Traxxas® iD® LiPo battery (adapts Traxxas iD batteries to separate balance ports)
2943 Battery charge indicators (green (4), blue (4), grey (4))
6548 Battery door, transmitter (replacement for #6516, 6517, 6528, 6529, 6530 transmitters)
2914 Battery, Power Cell AA Alkaline (4)
2925X Battery, Series 1 Power Cell, 1200mAh (NiMH, 6-C flat, 7.2V, 2/3A)
2974 Charger, DC, 2 amp (5 - 7 cell, 6.0 - 8.4 volt, NiMH)
2972 Charger, EZ-Peak® Dual, 100W, NiMH/LiPo with iD® Auto Battery Identification
2973 Charger, EZ-Peak® Live Dual, 200W, NiMH/LiPo with iD® Auto Battery Identification
2971 Charger, EZ-Peak® Live, 100W, NiMH/LiPo with iD® Auto Battery Identification
2970 Charger, EZ-Peak® Plus, 4 amp, NiMH/LiPo with iD® Auto Battery Identification
6543 Connector, power tap (with cable) (short)/ wire tie
2978 Fuse, charger, 5A (2) (for #2974, 2975, 2977)
2082 Gear set (for 2080 micro waterproof servo)
2082X Gear set, metal (for 2080X micro waterproof servo)
2968X LiPo cell voltage checker/balancer (includes #2938X adapter for Traxxas® iD® batteries)
2968 LiPo cell voltage checker/balancer (requires #2938X adapter for Traxxas® iD® batteries)
6535 Mount, temperature sensor (electric motors)/ wire tie/ thermal pad
6519 Receiver, micro, TQ 2.4GHz (3-channel)
6533 Receiver, micro, TQi 2.4GHz with telemetry & TSM (5-channel)
6522 Sensor, RPM (short)/ 3x4mm BCS (2)
6523 Sensor, temperature and voltage (short)
2081 Servo case/ gaskets (for 2080 micro waterproof servo)
2081X Servo case/ gaskets (for 2080X metal gear, micro, waterproof servo)
2080 Servo, micro, waterproof
2080X Servo, micro, waterproof, metal gear
6540 Telemetry trigger magnet, 5X2mm (1)
6509R TQi 2.4 GHz High Output radio system, 2-channel, Traxxas Link™ enabled, TSM (2-ch transmitter, 5-ch micro receiver)
6507R TQi 2.4 GHz High Output radio system, 4-channel with Traxxas Link™ Wireless Module, TSM (4-ch transmitter, 5-ch micro receiver)
6516 Transmitter, TQ 2.4GHz, 2-channel (transmitter only)
6528 Transmitter, TQi Traxxas Link™ enabled, 2.4GHz high output, 2-channel (transmitter only)
6529 Transmitter, TQi Traxxas Link™ enabled, 2.4GHz high output, 3-channel (transmitter only)
6530 Transmitter, TQi Traxxas Link™ enabled, 2.4GHz high output, 4-channel (transmitter only)
6511 Traxxas Link™ Wireless Module
3375 VXL-3m Electronic Speed Control, waterproof (brushless)
3064X Wire harness, parallel battery connection (compatible with Traxxas® High Current Connector, NiMH only)
3024R XL 2.5 Electronic Speed Control, waterproof

Ready-To-Race Model

71054-1 E-Revo®: 1/16-Scale 4WD Racing Monster Truck with TQ 2.4GHz radio system

Rear Suspension

7033X Aluminum caps, pivot ball (threaded aluminum, hard-anodized with PTFE-coating) (8)/ hex wrench, 5mm
7034 Axle carriers, left & right (2 each)
7023 Bulkhead tie bars, front & rear (blue-anodized aluminum)/ 2.5x6 CS (1)
7029X Bulkhead, rear (left & right halves)/ 3x10mm BCS (4)
7028 Hollow balls (20)
7028X Hollow balls, steel (machined)
7033 Pivot balls (4)/ pivot ball caps (4)
7118G Push rod (molded composite) (green) (4)/ hollow balls (8)
7118 Push rod (molded composite) (red) (4)/ hollow balls (8)
7118X Push rods, aluminum (red-anodized) (4) (assembled with rod ends)
7155 Rocker arm post, steel (4)
7158 Rocker arm set, progressive-2/ plastic bushings (8)
2523 Screws, 2.5x10mm countersunk machine (hex drive) (6)
7043 Steering arm (upper & lower)/ steering link/ servo horn/ servo saver/ servo saver spring/ servo horn mount/ ball stud (2)/ shock mounts, front & rear/ 2.5x18mm CS (4)
7132 Suspension arm set, rear (includes upper right & left and lower right & left arms)
7132R Suspension arm set, rear, extended wheelbase (lengthens wheelbase 10mm) (includes upper right & left and lower right & left arms)
7021 Suspension pin set (front or rear), 2x46mm (2), 2x14mm (4)
7138G Toe link, front & rear (molded composite) (green) (4)/ hollow balls (8)
7138 Toe link, front & rear (molded composite) (red) (4)/ hollow balls (8)
7138X Toe links, aluminum (red-anodized) (4) (assembled with rod ends and threaded inserts)

Shocks (GTR)

7066X Body, GTR shock (hard-anodized, PTFE-coated aluminum) (1)
7066 Body, GTR shock (molded composite) (2)
7065 Caps and spring retainers, GTR shock (upper cap (2)/ hollow balls (4)/ bottom cap (2)/ upper retainer (2)/ lower retainer (2))
7028 Hollow balls (20)
7067 Piston, damper (2x0.5mm hole, red) (4)/ travel limiters (4)
7062 Rebuild kit, GTR composite shocks (x-rings, bladders, pistons, e-clips, shock rod ends, hollow balls) (renews 2 shocks)
7063 Shaft, GTR shock (2)
7063T Shaft, GTR shock (TiN-coated) (4)
7061 Shocks, GTR composite (assembled, without springs) (2)
7061X Shocks, GTR hard anodized, PTFE-coated bodies with TiN shafts (fully assembled, without springs) (4)

Slipper Clutch Components

7152 Slipper clutch, complete (includes slipper clutch hub, clutch pad, spring, 3.0mm NL, 1.5x6mm pin)

Springs

7145 Spring, shock (GTR) (1.76 rate, orange) (1 pair)
7146 Spring, shock (GTR) (1.92 rate, green) (1 pair)
7147 Spring, shock (GTR) (2.06 rate, tan) (1 pair)
7148 Spring, shock (GTR) (2.22 rate, black) (1 pair)

Spur Gears & Pinion Gears

2416 Gear, 16-T pinion (48-pitch) / set screw
1918 Gear, 18-T pinion (48-pitch) / set screw
2419 Gear, 19-T pinion (48-pitch) / set screw
2423 Gear, 23-T pinion (48-pitch) / set screw
2426 Gear, 26-T pinion (48-pitch)/set screw
2431 Gear, 31-T pinion (48-pitch) / set screw
4725 Gear, pinion (25-tooth) (48-pitch) / set screw
4728 Gear, pinion (28-tooth) (48-pitch)/ set screw
7045R Spur gear, 45-tooth
7046R Spur gear, 50-tooth
7047R Spur gear, 55-tooth

Steering Components

5114 Ball bearings, blue rubber sealed (5x8x2.5mm) (2)
2545 Bellcrank bushings (plastic) (5x8x2.5mm) (4)
7043 Steering arm (upper & lower)/ steering link/ servo horn/ servo saver/ servo saver spring/ servo horn mount/ ball stud (2)/ shock mounts, front & rear/ 2.5x18mm CS (4)
7138G Toe link, front & rear (molded composite) (green) (4)/ hollow balls (8)
7138 Toe link, front & rear (molded composite) (red) (4)/ hollow balls (8)
7138X Toe links, aluminum (red-anodized) (4) (assembled with rod ends and threaded inserts)

Suspension Linkage

7028 Hollow balls (20)
7028X Hollow balls, steel (machined)
7118G Push rod (molded composite) (green) (4)/ hollow balls (8)
7118 Push rod (molded composite) (red) (4)/ hollow balls (8)
7118X Push rods, aluminum (red-anodized) (4) (assembled with rod ends)
7021 Suspension pin set (front or rear), 2x46mm (2), 2x14mm (4)
7138G Toe link, front & rear (molded composite) (green) (4)/ hollow balls (8)
7138 Toe link, front & rear (molded composite) (red) (4)/ hollow balls (8)

1/16 E-REVO® (71054-1)

7138X	**Toe links, aluminum (red-anodized) (4) (assembled with rod ends and threaded inserts)**

Tires & Wheels

7175	**Tires & wheels, assembled, glued (white dished 2.2" wheels, Response Pro 2.2" tires, foam inserts) (2)**
7174A	Tires and wheels, assembled, glued (Gemini black chrome wheels, Talon tires, foam inserts) (2)
7173	**Tires, Response Pro 2.2" (soft-compound, narrow profile, short knobby design)/ foam inserts (2)**
7170	Tires, Talon / foam inserts (2)
7154	Wheel hubs, hex (4)/ axle pins (1.5x8mm) (4)
7154X	**Wheel hubs, hex, aluminum (blue-anodized) (4)**
7171	**Wheels, dished 2.2" (white) (2)**
7172A	Wheels, Gemini (black chrome) (2)

Transmission Components

7077R	**Cover, gear/ motor mount hinge post/ 3x10mm CS with split and flat washers (1)/ 3x8mm BCS (1)**
7379R	Cover, gear/motor plate access cover/ motor mount hinge post / 3x10mm CS w/split and flat washers (1) / 2.5x4mm CS (2) / 3x8mm BCS (1) (for 550 motors)
7014	**Differential kit, center (complete)**
7093	Gear set, transmission (includes 18T, 25T input gears, 13T idler gear (steel), 35T output gear, M3x13.75 screw pin)
7091	Gearbox halves, front & rear
7092	Input shaft/ output shaft
7090	**Plate, motor**
7380	Plate, motor (for 550 motor)
7014X	**Rebuild kit, center differential (includes o-rings and diff gear covers)**
7152	Slipper clutch, complete (includes slipper clutch hub, clutch pad, spring, 3.0mm NL, 1.5x6mm pin)

Traxxas Tools

3433X	**Body reamer (aluminum handle)**
3433	**Body reamer (plastic handle)**
3436	**Cap, body reamer**
3432	**Scissors, curved tip**
3431	**Scissors, straight tip**
8712	**Speed Bit Essentials Set, hex and nut driver, 7-piece, includes premium handle (medium), travel pouch, hex drivers (straight: 1.5mm, 2.0mm, 2.5mm) and nut drivers (5.0mm, 5.5mm, 7.0mm, and 8.0mm), 1/4" drive**
8721	**Speed bit handle, medium (one piece)**
8720	**Speed bit handle, premium, large (rubber overmold)**
8722	**Speed bit handle, premium, medium (rubber overmold)**
8710	**Speed Bit Master Set, hex and nut driver, 13-piece, includes premium handle (medium), travel pouch, hex drivers (straight: 1.5mm, 2.0mm, 2.5mm, 3.0mm), (ball-end: 2.0mm, 2.5mm, 3.0mm), and nut drivers (4.00mm, 4.50mm, 5.00mm, 5.50mm, 7.00mm, 8.00mm),**
8711	**Speed Bit Master Set, hex driver, 7-piece straight and ball end, includes premium handle (medium), travel pouch, hex drivers (straight: 1.5mm, 2.0mm, 2.5mm, 3.0mm) (ball end: 2.0mm, 2.5mm, 3.0mm), 1/4" drive**
8719	**Speed Bit Master Set, nut driver, 6-piece, includes premium handle (medium), travel pouch, and nut drivers (4.0mm, 4.5mm, 5.0mm, 5.5mm, 7.0mm, 8.0mm), 1/4" drive**
8716	**Speed Bit Set, hex driver, 2-piece ball-end (2.0mm, 2.5mm), 1/4" drive**
8716X	**Speed Bit Set, hex driver, 3-piece ball-end (2.0mm, 2.5mm, 3.0mm), 1/4" drive**
8715	**Speed Bit Set, hex driver, 3-piece straight (1.5mm, 2.0mm, 2.5mm), 1/4" drive**
8715X	**Speed Bit Set, hex driver, 4-piece straight (1.5mm, 2.0mm, 2.5mm, 3.0mm), 1/4" drive**
3415	**Tool set with pouch (includes 1.5mm, 2.0mm, 2.5mm, 3.0mm, 3.5mm, 4mm drivers/ 4mm, 5mm, 5.5mm, 7mm and 8mm nut drivers/ 2mm, 4mm, and 5mm slotted screwdrivers/ #00 Phillips, #0 Phillips, and #1 Phillips screwdrivers/ 4mm and 8mm wrench/ driver handle**

Turnbuckles & Threaded Rods

7028	Hollow balls (20)
7028X	**Hollow balls, steel (machined)**
7118G	**Push rod (molded composite) (green) (4)/ hollow balls (8)**
7118	Push rod (molded composite) (red) (4)/ hollow balls (8)
7118X	**Push rods, aluminum (red-anodized) (4) (assembled with rod ends)**
7138G	**Toe link, front & rear (molded composite) (green) (4)/ hollow balls (8)**
7138	Toe link, front & rear (molded composite) (red) (4)/ hollow balls (8)
7138X	**Toe links, aluminum (red-anodized) (4) (assembled with rod ends and threaded inserts)**

If you have questions or need technical assistance, call Traxxas at:

1-888-TRAXXAS

(1-888-872-9927) (U.S. residents only)

For orders, calls outside the U.S., and other information, call 972-549-3000, or fax to 972-549-3011 e-mail Traxxas at support@Traxxas.com

TRAXXAS.com

REV. 201002 1247

TSM
TRAXXAS STABILITY MANAGEMENT

1/16 E-REVO VXL BRUSHLESS

MODEL 71076-3

ELECTRIC POWERED
BRUSHLESS MONSTER TRUCK



50+ mph*



SERIES 1, 6-CELL , 1200 MAH NIMH POWER CELL BATTERY



VELINEON VXL-3M BRUSHLESS POWER SYSTEM



TQi 2.4GHz TRANSMITTER COMPATIBLE WITH TRAXXAS LINK WIRELESS MODULE

E-REVO INNOVATION, PRECISION, AND PERFORMANCE —IN 1/16 SCALE!

Traxxas sets the standard for power, performance and innovation. Now, for the first time, all the speed, quality and capability you expect from Traxxas is available in 1/16 scale with the 1/16 E-Revo VXL. At 14 inches long, E-Revo VXL is about half the size of the 1/10-scale E-Revo. But don't call it a "mini"—this is a whole new category of R/C performance and fun that no mere mini-model can match. Beneath the factory-finished polycarbonate shell, you'll find the winning suspension technology of the seven-time National Champion Traxxas Revo, screaming Velineon brushless-motor power, and the convention-busting innovation of the E-Revo.

*With optional 2nd NiMh battery, 3063X series connector (sold separately), and included speed pinion

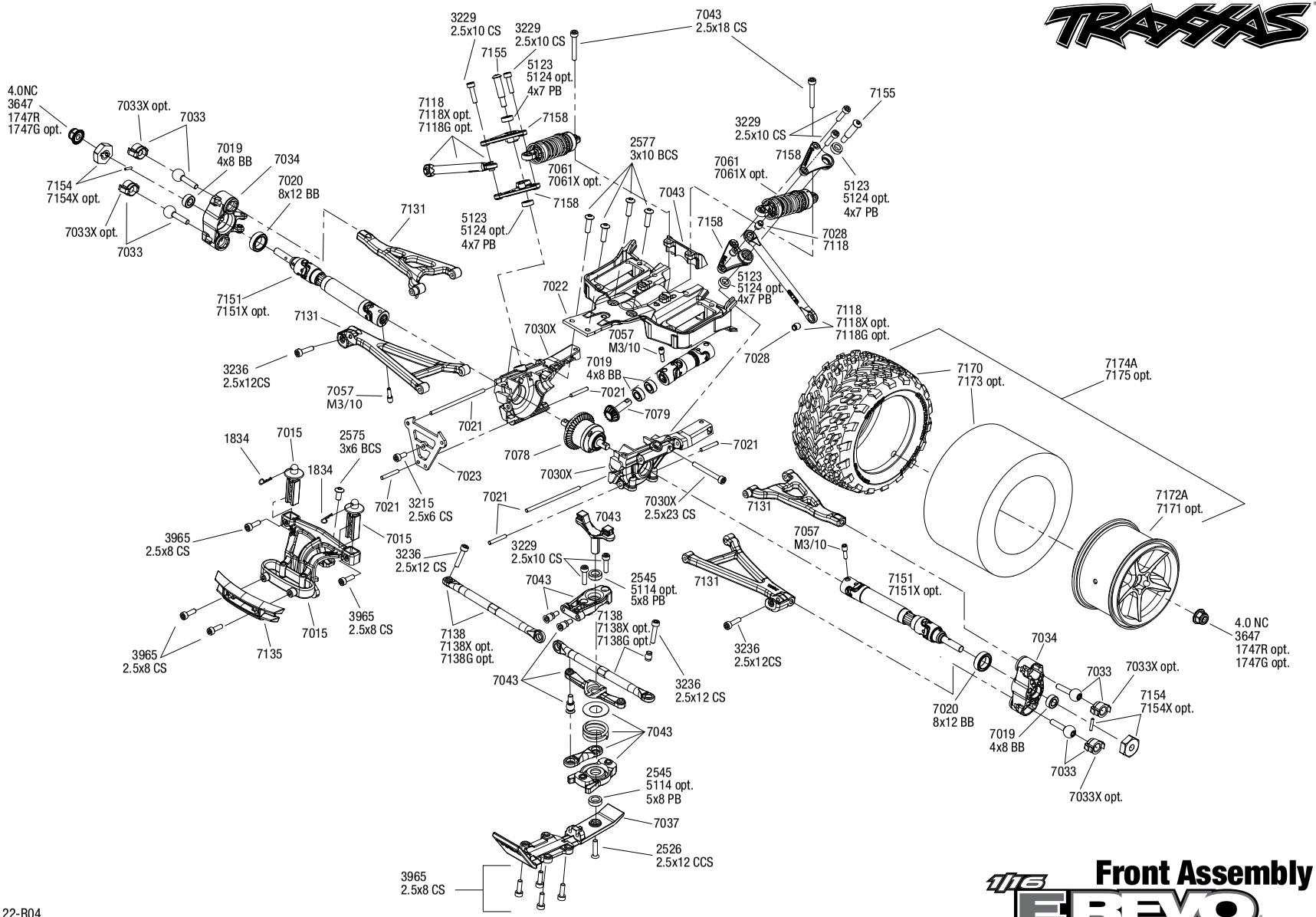

1/16 Front Assembly

1/16 E-REVO VXL BRUSHLESS

REV 190122-R04

Specifications on this page are subject to change without notice. Every attempt has been made to ensure the accuracy of this drawing; however, Traxxas cannot be held responsible for typographical or other errors.

See Parts List for a complete listing of optional accessories.

1/16 E-REVO® VXL (71076-3)

EXPLODED VIEWS

Chassis Assembly

REV 190122-R04

See Parts List for a complete listing of optional accessories.

Specifications on this page are subject to change without notice. Every attempt has been made to ensure the accuracy of this drawing; however, Traxxas cannot be held responsible for typographical or other errors.

Questions? **Call toll-free, 1-888-TRAXXAS**

1/16 E-REVO VXL BRUSHLESS

Transmission Assembly

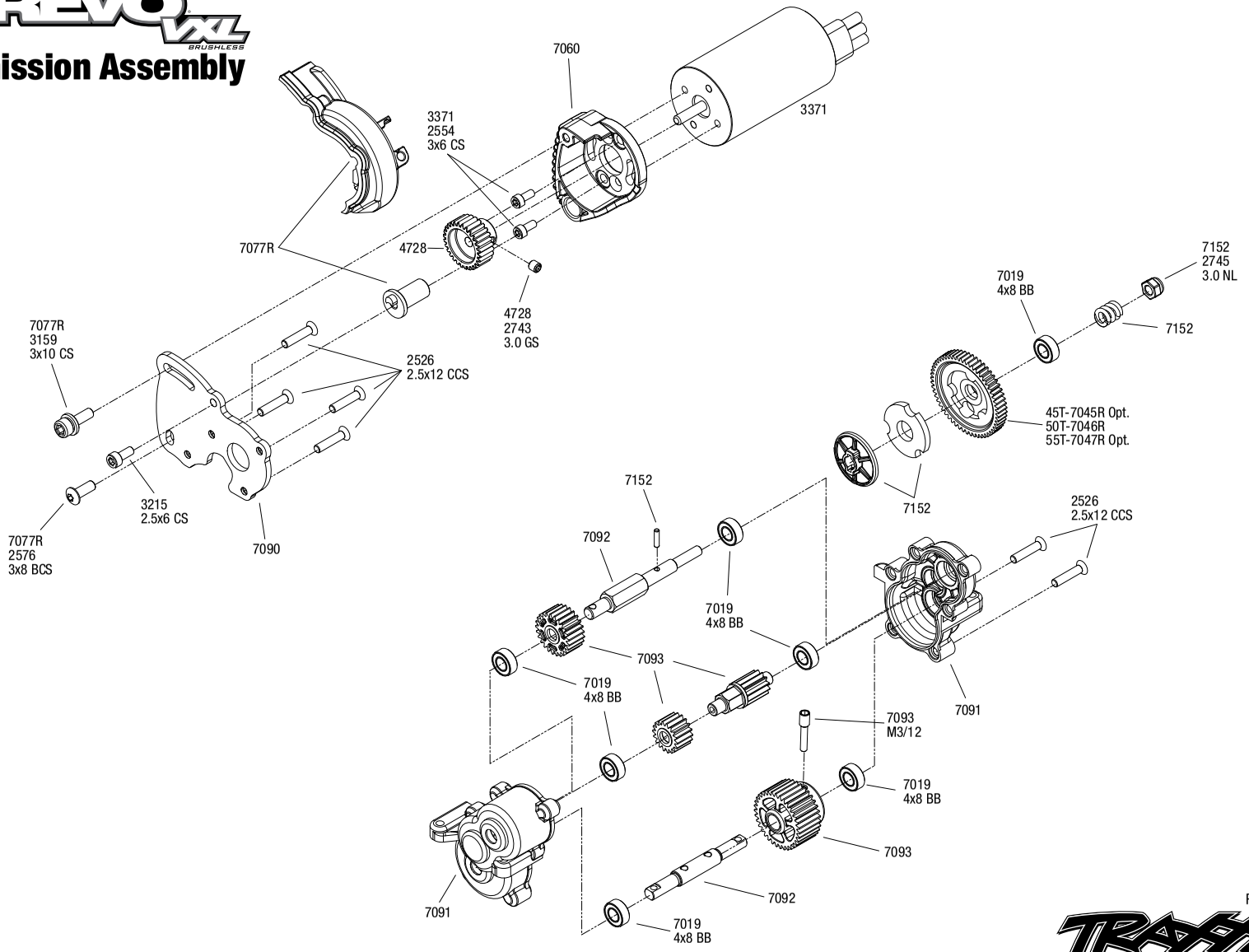

REV 190122-R04

See Parts List for a complete listing of optional accessories.

Specifications on this page are subject to change without notice. Every attempt has been made to ensure the accuracy of this drawing; however, Traxxas cannot be held responsible for typographical or other errors.

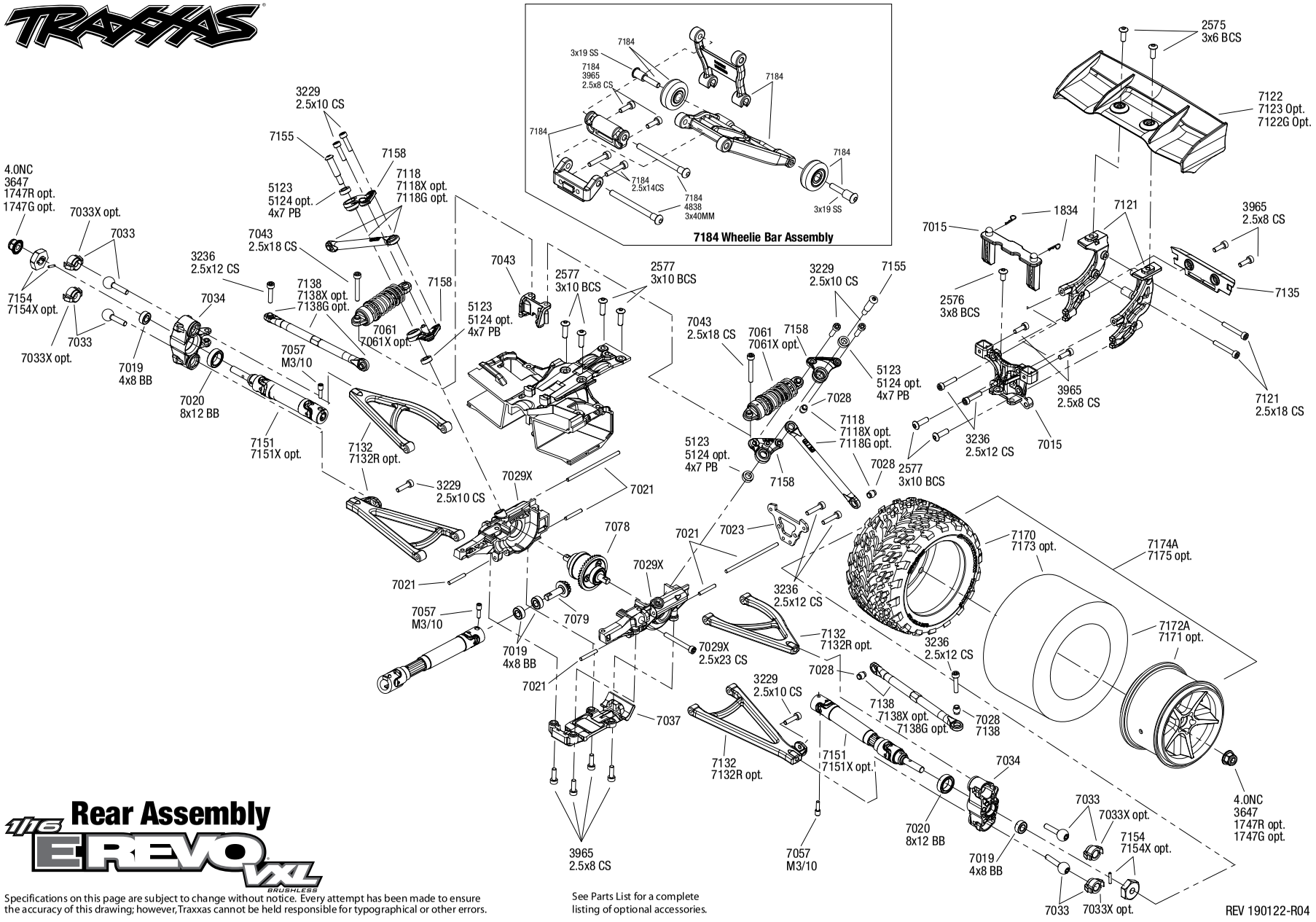

1/16 E-REVO VXL Rear Assembly

Specifications on this page are subject to change without notice. Every attempt has been made to ensure the accuracy of this drawing; however, Traxxas cannot be held responsible for typographical or other errors.

See Parts List for a complete listing of optional accessories.

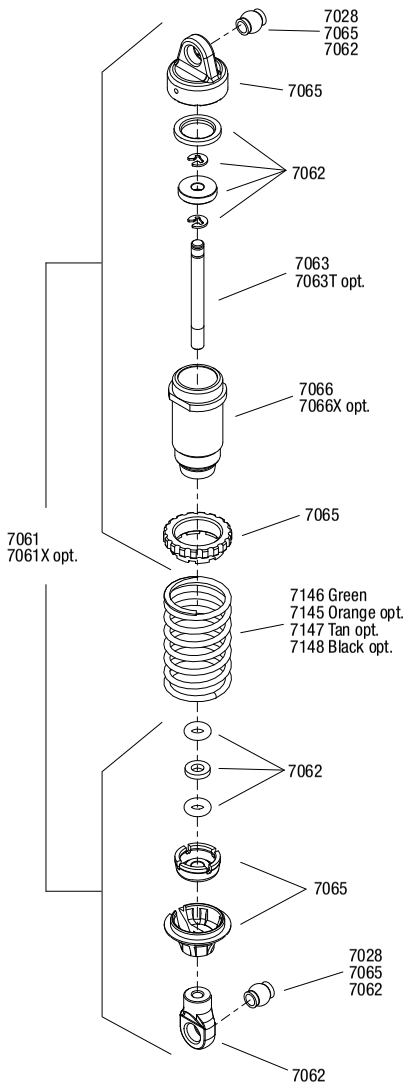

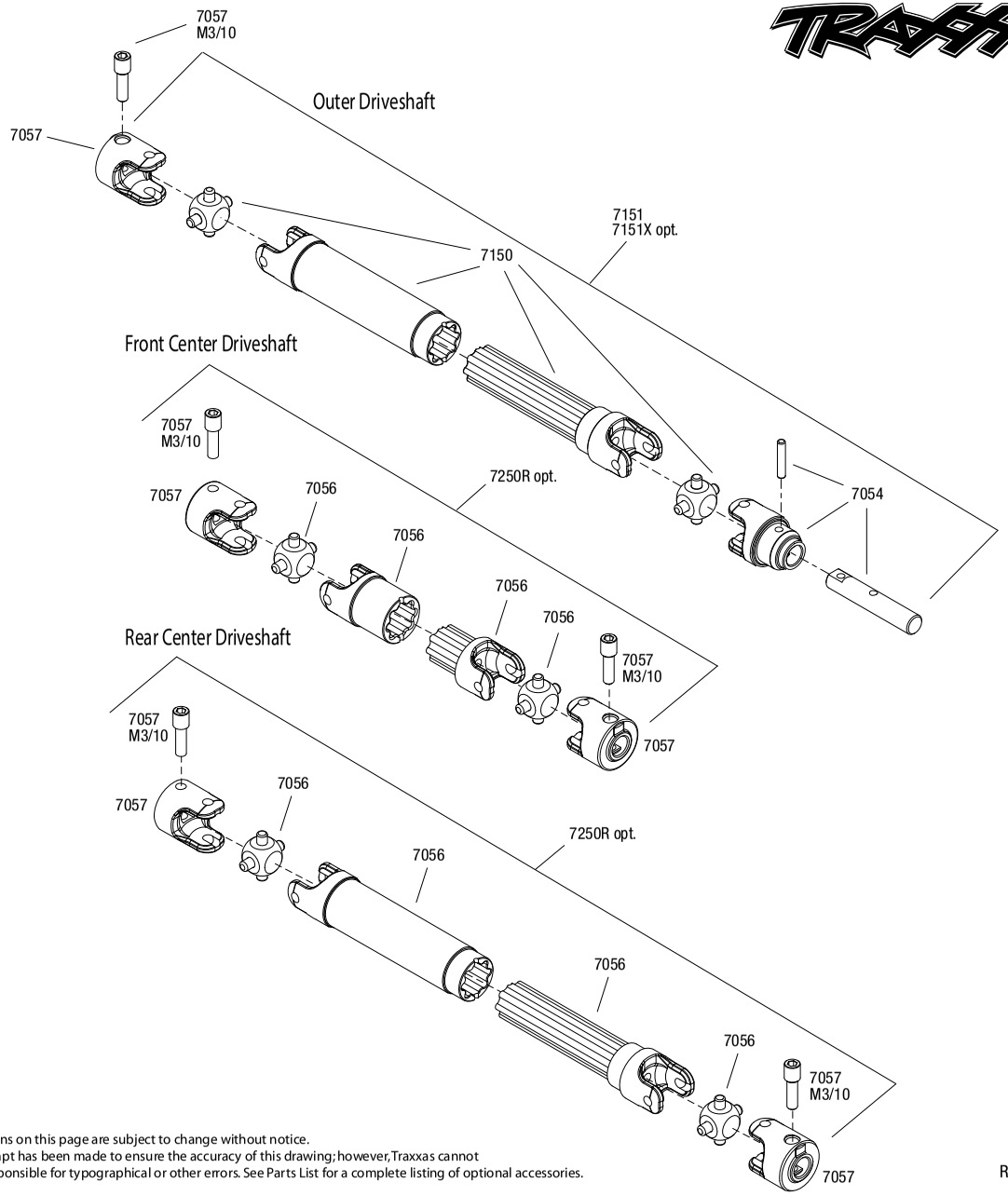

1/16 EREVO VXL BRUSHLESS Driveshaft Assembly

Specifications on this page are subject to change without notice.
Every attempt has been made to ensure the accuracy of this drawing; however, Traxxas cannot be held responsible for typographical or other errors. See Parts List for a complete listing of optional accessories.

REV 190122-R04

1/16 E-REVO® VXL (71076-3)

PARTS SHOWN IN BOLD ARE OPTIONAL ACCESSORIES.

Part categories and individual part listings are arranged alphabetically.

Bearings & Bushings

5124	**Ball bearings, blue rubber sealed (4x7x2.5mm) (2)**
7019	Ball bearings, blue rubber sealed (4x8x3mm) (2)
5114	**Ball bearings, blue rubber sealed (5x8x2.5mm) (2)**
7020	Ball bearings, blue rubber sealed (8x12x3.5mm) (2)

Body & Accessories

1926	Antenna caps, vinyl (2)/ antenna spool
1726	Antenna, tube (1)/ vinyl antenna cap (1)/ wire retainer (1)
1834	Body clips (12) (standard size)
7015	Body mounts, front & rear/ body mount posts, front & rear
4915	Body washers, foam adhesive (10)
6716	**Body washers, foam, 2mm (2)/ 3mm (2)/ 4mm (4)**
7111	**Body, 1/16 E-Revo® (clear, requires painting)/ grille and lights decal sheet**
2514	Decal sheet, racing sponsors
7113	Decal sheets, 1/16 E-Revo® VXL
9950	Official Team Traxxas® racing decal set (flag logo/ 6-color)
7121	Wing mount/ hardware (1/16 E-Revo®)
7122	Wing, 1/16 E-Revo® (black)/ decal sheet
7122G	**Wing, 1/16 E-Revo® (Exo-carbon finish)/ decal sheet**
7123	**Wing, 1/16 E-Revo® (white)/ decal sheet**

Bumpers & Skidplates

7135	Bumpers, front (1)/ rear (1)
7037	Skidplate set, front (1)/ rear (1)/ transmission (1)/ steering servo guards (2) / steering servo cover plate (1)

Chassis & Attachments

7015	Body mounts, front & rear/ body mount posts, front & rear
7023	Bulkhead tie bars, front & rear (blue-anodized aluminum)/ 2.5x6 CS (1)
7030X	Bulkhead, front (left & right halves)/ 3x10mm BCS (4)
7029X	Bulkhead, rear (left & right halves)/ 3x10mm BCS (4)
7022	Chassis
7026	Door, battery compartment (1)/ vents, battery compartment (1 pair) (fits right or left side)
7186	**LED lights, light harness (4 clear, 4 red)/ bumpers, front & rear/ wire ties (3) (requires power supply #7286)**
7025	Seal kit, receiver box (includes o-ring, seals, and silicone grease)
7037	Skidplate set, front (1)/ rear (1)/ transmission (1)/ steering servo guards (2) / steering servo cover plate (1)
7043	Steering arm (upper & lower)/ steering link/ servo horn/ servo saver/ servo saver spring/ servo horn mount/ ball stud (2)/ shock mounts, front & rear/ 2.5x18mm CS (4)
7184	**Wheelie bar, assembled**
7121	Wing mount/ hardware (1/16 E-Revo®)

Differential Components

7019	Ball bearings, blue rubber sealed (4x8x3mm) (2)
7020	Ball bearings, blue rubber sealed (8x12x3.5mm) (2)
7080	Cover plates, differential (front or rear)/ gaskets (2)/ o-rings (2)/ 2x14mm BCS (4)
7078	Differential assembly, complete
7014	**Differential kit, center (complete)**
7381	**Differential locker (2)**
5136X	**Differential oil kit (1 each: 10K, 30K, 50K weights)**
7082	Gear set, differential (output gears (2)/ spider gears (3))/ differential output shafts (2)/ 1.5x6mm pin (3)/ 1.5x8mm pin (2)
5130	**Oil, differential (100K wt) (0.7 oz (20cc))**
5135	**Oil, differential (10K wt)**
5136	Oil, differential (30K wt)
5137	**Oil, differential (50K wt)**
7014X	**Rebuild kit, center differential (includes o-rings and diff gear covers)**
7079	Ring gear, differential/ pinion gear, differential

Driveline Components

7034	Axle carriers, left & right (2 each)
7052	**Drive cups, inner (2) (steel constant-velocity driveshafts)**
7151	Driveshaft assembly (1) left or right (fully assembled, ready to install)/ 3x10mm screw pin (1)
7151X	**Driveshaft, 1/16 E-Revo (steel constant-velocity) (assembled) (4)**
7153	**Driveshaft, steel constant-velocity, 1/16 E-Revo® (shaft only, 68mm)/ drive cup pin (1)**
7250R	**Driveshafts, center (steel constant-velocity) front (1), rear (1) (fully assembled)**
7056	Half shafts, center front (1), center rear (1) (internal splined half shafts (2)/external splined half shaft) (2))/ metal u-joints (4)
7150	Half shafts, left or right (internal splined half shaft (2)/external splined half shaft) (2))/ metal u-joints (4)
7055	**Rebuild kit, steel constant-velocity driveshafts (includes pins, o-rings, stub axles for driveshafts assemblies)**
7054	Stub axle, steel (2)/ yokes (2) (assembled)
7154	Wheel hubs, hex (4)/ axle pins (1.5x8mm) (4)
7154X	**Wheel hubs, hex, aluminum (blue-anodized) (4)**
7057	Yokes, differential and transmission (2)/ 3x10mm screw pin (2)

Front Suspension

7033X	**Aluminum caps, pivot ball (threaded aluminum, hard-anodized with PTFE-coating) (8)/ hex wrench, 5mm**
7034	Axle carriers, left & right (2 each)
7023	Bulkhead tie bars, front & rear (blue-anodized aluminum)/ 2.5x6 CS (1)
7030X	Bulkhead, front (left & right halves)/ 3x10mm BCS (4)
7028	Hollow balls (20)
7028X	**Hollow balls, steel (machined)**
7033	Pivot balls (4)/ pivot ball caps (4)
7118G	**Push rod (molded composite) (green) (4)/ hollow balls (8)**
7118	Push rod (molded composite) (red) (4)/ hollow balls (8)
7118X	**Push rods, aluminum (red-anodized) (4) (assembled with rod ends)**
7155	Rocker arm post, steel (4)
7158	Rocker arm set, progressive-2/ plastic bushings (8)
2523	Screws, 2.5x10mm countersunk machine (hex drive) (6)
7043	Steering arm (upper & lower)/ steering link/ servo horn/ servo saver/ servo saver spring/ servo horn mount/ ball stud (2)/ shock mounts, front & rear/ 2.5x18mm CS (4)
7131	Suspension arm set, front (includes upper right & left and lower right & left arms)
7021	Suspension pin set (front or rear), 2x46mm (2), 2x14mm (4)

Hardware

5124	**Ball bearings, blue rubber sealed (4x7x2.5mm) (2)**
7019	Ball bearings, blue rubber sealed (4x8x3mm) (2)
5114	**Ball bearings, blue rubber sealed (5x8x2.5mm) (2)**
7020	Ball bearings, blue rubber sealed (8x12x3.5mm) (2)
5123	Bellcrank bushings (plastic) (4x7x2.5mm) (4)
2545	Bellcrank bushings (plastic) (5x8x2.5mm) (4)
1834	Body clips (12) (standard size)
5150	E-clips, 1.5mm (24)
5477	Flat wrench, 5mm (blue-anodized aluminum)
7028	Hollow balls (20)
7028X	**Hollow balls, steel (machined)**
2745	Nuts, 3mm nylon locking (12)
3647	Nuts, 4mm flanged nylon locking (steel, serrated) (8)
1747R	**Nuts, aluminum, flanged, serrated (4mm) (blue-anodized) (4)**
1747G	**Nuts, aluminum, flanged, serrated (4mm) (green-anodized) (4)**
1747P	**Nuts, aluminum, flanged, serrated (4mm) (pink-anodized) (4)**
7155	Rocker arm post, steel (4)
7059	**Rod ends (8)/ hollow balls (8)**
3229	Screws, 2.5x10mm cap-head machine (hex drive) (6)
2523	Screws, 2.5x10mm countersunk machine (hex drive) (6)
3236	Screws, 2.5x12mm cap-head machine (6)
2526	Screws, 2.5x12mm countersunk machine (hex drive) (6)
3215	Screws, 2.5x6mm cap-head machine (hex drive) (6)
3965	Screws, 2.5x8mm cap-head machine (6)
2577	Screws, 3x10mm button-head machine (hex drive) (6)
3159	Screws, 3x10mm cap-head machine (hex drive) (6)/ lock washers (6)/ hex wrench
2578	Screws, 3x12mm button-head machine (hex drive) (6)
2579	Screws, 3x15mm button-head machine (hex drive) (6)
2575	Screws, 3x6mm button-head machine (hex drive) (6)
2576	Screws, 3x8mm button-head machine (hex drive) (6)
2743	Set (grub) screws, 3mm hardened (12)

Motors & Electronics

2082	Gear set (for 2080 micro waterproof servo)
2082X	**Gear set, metal (for 2080X micro waterproof servo)**
3374	**Heat sink, Velineon® 380 brushless motor, aluminum (blue-anodized)**
7060	Motor mount, finned aluminum
3371	Motor, Velineon® Mini Maxx® 380, brushless (assembled with 16-gauge wire and gold-plated connectors)

3372 Rebuild kit, Velineon® 380 (4x9x4mm ball bearings (2), 2x6mm CCS (with threadlock) (2), front shims (2))
3373 Rotor, Velineon® 380 motor
2081 Servo case/ gaskets (for 2080 micro waterproof servo)
2081X Servo case/ gaskets (for 2080X metal gear, micro, waterproof servo)
2080 Servo, micro, waterproof
2080X Servo, micro, waterproof, metal gear
3370 Velineon® VXL-3m Brushless Power System, waterproof (includes waterproof VXL-3m ESC and Velineon 380 motor)
3375 VXL-3m Electronic Speed Control, waterproof (brushless)

Radio System, Batteries & Chargers

2823X 1400mAh 11.1v 3-Cell 25C LiPo Battery
2820X 2200mAh 7.4v 2-Cell 25C LiPo Battery
2976 AC to DC converter, 40W
2938X Adapter, Traxxas® iD® LiPo battery (adapts Traxxas iD batteries to separate balance ports)
2943 Battery charge indicators (green (4), blue (4), grey (4))
6548 Battery door, transmitter (replacement for #6516, 6517, 6528, 6529, 6530 transmitters)
2914 Battery, Power Cell AA Alkaline (4)
2925X Battery, Series 1 Power Cell, 1200mAh (NiMH, 6-C flat, 7.2V, 2/3A)
2974 Charger, DC, 2 amp (5 - 7 cell, 6.0 - 8.4 volt, NiMH)
2972 Charger, EZ-Peak® Dual, 100W, NiMH/LiPo with iD® Auto Battery Identification
2973 Charger, EZ-Peak® Live Dual, 200W, NiMH/LiPo with iD® Auto Battery Identification
2971 Charger, EZ-Peak® Live, 100W, NiMH/LiPo with iD® Auto Battery Identification
2970 Charger, EZ-Peak® Plus, 4 amp, NiMH/LiPo with iD® Auto Battery Identification
6543 Connector, power tap (with cable) (short)/ wire tie
2978 Fuse, charger, 5A (2) (for #2974, 2975, 2977)
2082 Gear set (for 2080 micro waterproof servo)
2082X Gear set, metal (for 2080X micro waterproof servo)
3374 Heat sink, Velineon® 380 brushless motor, aluminum (blue-anodized)
2968X LiPo cell voltage checker/balancer (includes #2938X adapter for Traxxas® iD® batteries)
2968 LiPo cell voltage checker/balancer (requires #2938X adapter for Traxxas® iD® batteries)
6535 Mount, temperature sensor (electric motors)/ wire tie/ thermal pad
6533 Receiver, micro, TQi 2.4GHz with telemetry & TSM (5-channel)
6522 Sensor, RPM (short)/ 3x4mm BCS (2)
6523 Sensor, temperature and voltage (short)
2081 Servo case/ gaskets (for 2080 micro waterproof servo)
2081X Servo case/ gaskets (for 2080X metal gear, micro, waterproof servo)
2080 Servo, micro, waterproof
2080X Servo, micro, waterproof, metal gear
6540 Telemetry trigger magnet, 5X2mm (1)
6509R TQi 2.4 GHz High Output radio system, 2-channel, Traxxas Link™ enabled, TSM (2-ch transmitter, 5-ch micro receiver)
6507R TQi 2.4 GHz High Output radio system, 4-channel with Traxxas Link™ Wireless Module, TSM (4-ch transmitter, 5-ch micro receiver)
6528 Transmitter, TQi Traxxas Link™ enabled, 2.4GHz high output, 2-channel (transmitter only)
6529 Transmitter, TQi Traxxas Link™ enabled, 2.4GHz high output, 3-channel (transmitter only)
6530 Transmitter, TQi Traxxas Link™ enabled, 2.4GHz high output, 4-channel (transmitter only)
6511 Traxxas Link™ Wireless Module
3375 VXL-3m Electronic Speed Control, waterproof (brushless)
3064X Wire harness, parallel battery connection (compatible with Traxxas® High Current Connector, NiMH only)
3063X Wire harness, series battery connection (compatible with Traxxas® High Current Connector, NiMH only)

Ready-To-Race Model

71076-3 E-Revo® VXL: 1/16-Scale 4WD Racing Monster Truck with TQi Traxxas Link™ Enabled 2.4GHz Radio System & Traxxas Stability Management (TSM)®

Rear Suspension

7033X Aluminum caps, pivot ball (threaded aluminum, hard-anodized with PTFE-coating) (8)/ hex wrench, 5mm
7034 Axle carriers, left & right (2 each)
7023 Bulkhead tie bars, front & rear (blue-anodized aluminum)/ 2.5x6 CS (1)
7029X Bulkhead, rear (left & right halves)/ 3x10mm BCS (4)
7028 Hollow balls (20)
7028X Hollow balls, steel (machined)
7033 Pivot balls (4)/ pivot ball caps (4)
7118G Push rod (molded composite) (green) (4)/ hollow balls (8)
7118 Push rod (molded composite) (red) (4)/ hollow balls (8)
7118X Push rods, aluminum (red-anodized) (4) (assembled with rod ends)
7155 Rocker arm post, steel (4)
7158 Rocker arm set, progressive-2/ plastic bushings (8)
2523 Screws, 2.5x10mm countersunk machine (hex drive) (6)
7043 Steering arm (upper & lower)/ steering link/ servo horn/ servo saver/ servo saver spring/ servo horn mount/ ball stud (2)/ shock mounts, front & rear/ 2.5x18mm CS (4)
7132 Suspension arm set, rear (includes upper right & left and lower right & left arms)
7132R Suspension arm set, rear, extended wheelbase (lengthens wheelbase 10mm) (includes upper right & left and lower right & left arms)
7021 Suspension pin set (front or rear), 2x46mm (2), 2x14mm (4)
7138G Toe link, front & rear (molded composite) (green) (4)/ hollow balls (8)
7138 Toe link, front & rear (molded composite) (red) (4)/ hollow balls (8)
7138X Toe links, aluminum (red-anodized) (4) (assembled with rod ends and threaded inserts)

Shocks (GTR)

7066X Body, GTR shock (hard-anodized, PTFE-coated aluminum) (1)
7066 Body, GTR shock (molded composite) (2)
7065 Caps and spring retainers, GTR shock (upper cap (2)/ hollow balls (4)/ bottom cap (2)/ upper retainer (2)/ lower retainer (2))
7028 Hollow balls (20)
7062 Rebuild kit, GTR composite shocks (x-rings, bladders, pistons, e-clips, shock rod ends, hollow balls) (renews 2 shocks)
7063 Shaft, GTR shock (2)
7063T Shaft, GTR shock (TiN-coated) (4)
7061 Shocks, GTR composite (assembled, without springs) (2)
7061X Shocks, GTR hard anodized, PTFE-coated bodies with TiN shafts (fully assembled, without springs) (4)

Slipper Clutch Components

7152 Slipper clutch, complete (includes slipper clutch hub, clutch pad, spring, 3.0mm NL, 1.5x6mm pin)

Springs

7145 Spring, shock (GTR) (1.76 rate, orange) (1 pair)
7146 Spring, shock (GTR) (1.92 rate, green) (1 pair)
7147 Spring, shock (GTR) (2.06 rate, tan) (1 pair)
7148 Spring, shock (GTR) (2.22 rate, black) (1 pair)

Spur Gears & Pinion Gears

2416 Gear, 16-T pinion (48-pitch) / set screw
1918 Gear, 18-T pinion (48-pitch) / set screw
2419 Gear, 19-T pinion (48-pitch) / set screw
2423 Gear, 23-T pinion (48-pitch) / set screw
2426 Gear, 26-T pinion (48-pitch)/set screw
2431 Gear, 31-T pinion (48-pitch) / set screw
4725 Gear, pinion (25-tooth) (48-pitch) / set screw
4728 Gear, pinion (28-tooth) (48-pitch)/ set screw
7045R Spur gear, 45-tooth
7046R Spur gear, 50-tooth
7047R Spur gear, 55-tooth

Steering Components

5114 Ball bearings, blue rubber sealed (5x8x2.5mm) (2)
2545 Bellcrank bushings (plastic) (5x8x2.5mm) (4)
7043 Steering arm (upper & lower)/ steering link/ servo horn/ servo saver/ servo saver spring/ servo horn mount/ ball stud (2)/ shock mounts, front & rear/ 2.5x18mm CS (4)
7138G Toe link, front & rear (molded composite) (green) (4)/ hollow balls (8)
7138 Toe link, front & rear (molded composite) (red) (4)/ hollow balls (8)
7138X Toe links, aluminum (red-anodized) (4) (assembled with rod ends and threaded inserts)

Suspension Linkage

7028 Hollow balls (20)
7118G Push rod (molded composite) (green) (4)/ hollow balls (8)
7118 Push rod (molded composite) (red) (4)/ hollow balls (8)
7118X Push rods, aluminum (red-anodized) (4) (assembled with rod ends)
7021 Suspension pin set (front or rear), 2x46mm (2), 2x14mm (4)

1/16 E-REVO® VXL (71076-3)

7138G	**Toe link, front & rear (molded composite) (green) (4)/ hollow balls (8)**
7138	Toe link, front & rear (molded composite) (red) (4)/ hollow balls (8)
7138X	**Toe links, aluminum (red-anodized) (4) (assembled with rod ends and threaded inserts)**

Tires & Wheels

7175	**Tires & wheels, assembled, glued (white dished 2.2" wheels, Response Pro 2.2" tires, foam inserts) (2)**
7174A	Tires and wheels, assembled, glued (Gemini black chrome wheels, Talon tires, foam inserts) (2)
7173	**Tires, Response Pro 2.2" (soft-compound, narrow profile, short knobby design)/ foam inserts (2)**
7170	Tires, Talon / foam inserts (2)
7154	Wheel hubs, hex (4)/ axle pins (1.5x8mm) (4)
7154X	**Wheel hubs, hex, aluminum (blue-anodized) (4)**
7171	**Wheels, dished 2.2" (white) (2)**
7172A	Wheels, Gemini (black chrome) (2)

Transmission Components

7077R	Cover, gear/ motor mount hinge post/ 3x10mm CS with split and flat washers (1)/ 3x8mm BCS (1)
7014	**Differential kit, center (complete)**
7093	Gear set, transmission (includes 18T, 25T input gears, 13T idler gear (steel), 35T output gear, M3x13.75 screw pin)
7091	Gearbox halves, front & rear
7092	Input shaft/ output shaft
7090	Plate, motor
7014X	**Rebuild kit, center differential (includes o-rings and diff gear covers)**
7152	Slipper clutch, complete (includes slipper clutch hub, clutch pad, spring, 3.0mm NL, 1.5x6mm pin)

Traxxas Tools

3433X	**Body reamer (aluminum handle)**
3433	**Body reamer (plastic handle)**
3436	**Cap, body reamer**
3432	**Scissors, curved tip**
3431	**Scissors, straight tip**
8712	**Speed Bit Essentials Set, hex and nut driver, 7-piece, includes premium handle (medium), travel pouch, hex drivers (straight: 1.5mm, 2.0mm, 2.5mm) and nut drivers (5.0mm, 5.5mm, 7.0mm, and 8.0mm), 1/4" drive**
8721	**Speed bit handle, medium (one piece)**
8720	**Speed bit handle, premium, large (rubber overmold)**
8722	**Speed bit handle, premium, medium (rubber overmold)**
8710	**Speed Bit Master Set, hex and nut driver, 13-piece, includes premium handle (medium), travel pouch, hex drivers (straight: 1.5mm, 2.0mm, 2.5mm, 3.0mm), (ball-end: 2.0mm, 2.5mm, 3.0mm), and nut drivers (4.00mm, 4.50mm, 5.00mm, 5.50mm, 7.00mm, 8.00mm),**
8711	**Speed Bit Master Set, hex driver, 7-piece straight and ball end, includes premium handle (medium), travel pouch, hex drivers (straight: 1.5mm, 2.0mm, 2.5mm, 3.0mm) (ball end: 2.0mm, 2.5mm, 3.0mm), 1/4" drive**
8719	**Speed Bit Master Set, nut driver, 6-piece, includes premium handle (medium), travel pouch, and nut drivers (4.0mm, 4.5mm, 5.0mm, 5.5mm, 7.0mm, 8.0mm), 1/4" drive**
8716	**Speed Bit Set, hex driver, 2-piece ball-end (2.0mm, 2.5mm), 1/4" drive**
8716X	**Speed Bit Set, hex driver, 3-piece ball-end (2.0mm, 2.5mm, 3.0mm), 1/4" drive**
8715	**Speed Bit Set, hex driver, 3-piece straight (1.5mm, 2.0mm, 2.5mm), 1/4" drive**
8715X	**Speed Bit Set, hex driver, 4-piece straight (1.5mm, 2.0mm, 2.5mm, 3.0mm), 1/4" drive**
3415	**Tool set with pouch (includes 1.5mm, 2.0mm, 2.5mm, 3.0mm, 3.5mm, 4mm drivers/ 4mm, 5mm, 5.5mm, 7mm and 8mm nut drivers/ 2mm, 4mm, and 5mm slotted screwdrivers/ #00 Phillips, #0 Phillips, and #1 Phillips screwdrivers/ 4mm and 8mm wrench/ driver handle**

Turnbuckles & Threaded Rods

7028	Hollow balls (20)
7118G	**Push rod (molded composite) (green) (4)/ hollow balls (8)**
7118	Push rod (molded composite) (red) (4)/ hollow balls (8)
7118X	**Push rods, aluminum (red-anodized) (4) (assembled with rod ends)**
7138G	**Toe link, front & rear (molded composite) (green) (4)/ hollow balls (8)**
7138	Toe link, front & rear (molded composite) (red) (4)/ hollow balls (8)
7138X	**Toe links, aluminum (red-anodized) (4) (assembled with rod ends and threaded inserts)**

If you have questions or need technical assistance, call Traxxas at:

1-888-TRAXXAS

(1-888-872-9927) (U.S. residents only)

For orders, calls outside the U.S., and other information, call 972-549-3000, or fax to 972-549-3011 e-mail Traxxas at support@Traxxas.com

TRAXXAS.COM

REV. 201002 1238

1/16 SUMMIT

MODEL 72054-5

ELECTRIC POWERED
BRUSHLESS MONSTER TRUCK



SERIES 1, 6-CELL , 1200 MAH
NIMH POWER CELL BATTERY

TITAN® 12-TURN 550
MODIFIED MOTOR

TQ 2.4GHz TRANSMITTER

SUMMIT STYLE AND PERFORMANCE!

Barely as tall as a single tire on the 1/10 scale Summit, the 1/16 Summit will make you forget all about its super convenient and fun size while its massive suspension travel, and 4-wheel drive traction tackle impossible terrain and turn "no way" into "no problem." Traxxas engineers have managed to pack all the big Summit's go-anywhere versatility into a smaller machine that knows no boundaries. Waterproof? Check. Traxxas tough durability? You bet. Traxxas engineers built this one to run hard and fast with extreme duty driveshafts, rugged ExoCage body, beefed up suspension damping, and scale Canyon AT tires. The 1/16 Summit's just-right size lets you enjoy hours of off-road fun anywhere, anytime!

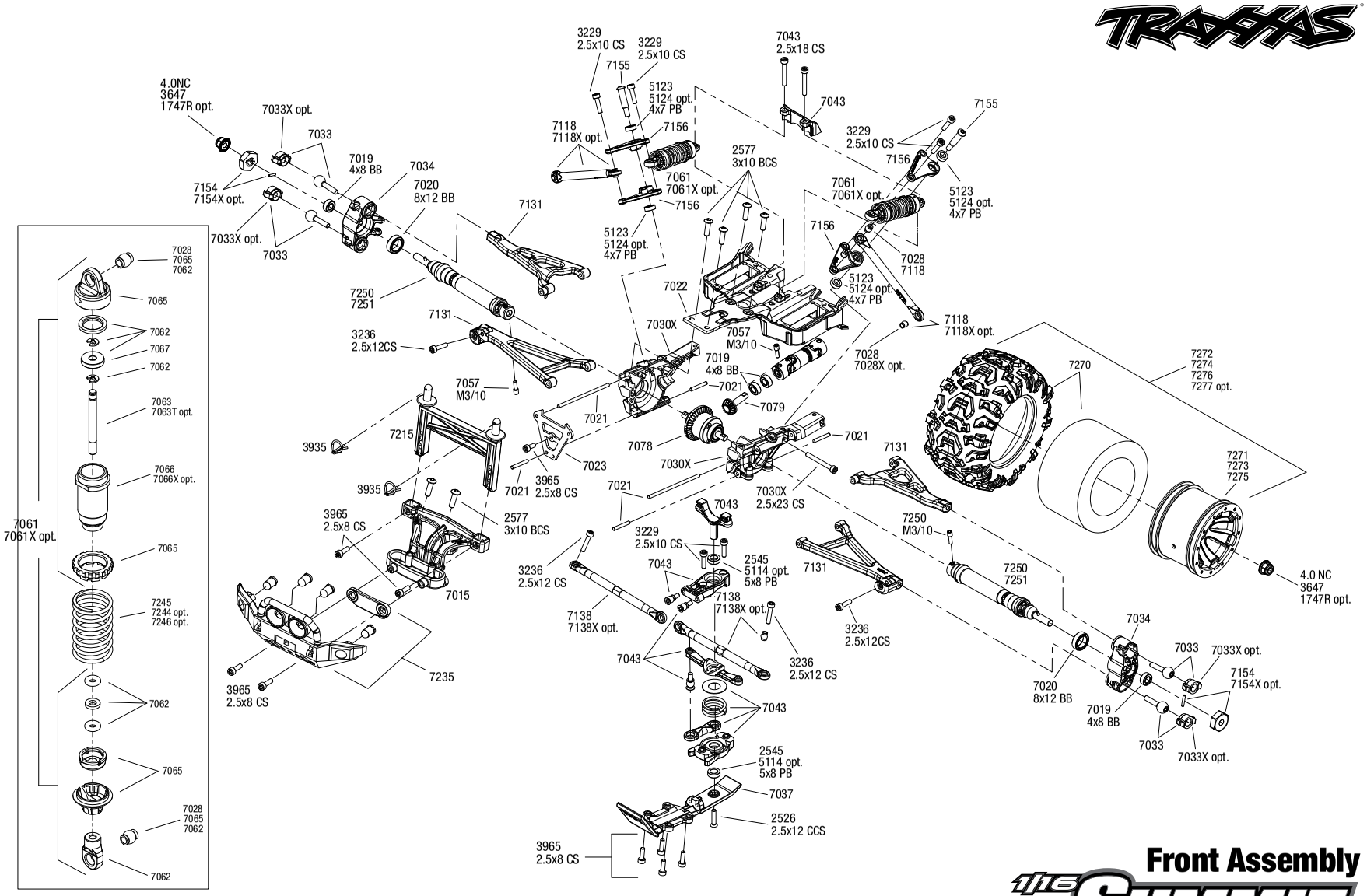

Front Assembly

1/16 SUMMIT

REV 200929-R08

Specifications on this page are subject to change without notice. Every attempt has been made to ensure the accuracy of this drawing; however, Traxxas cannot be held responsible for typographical or other errors.

See Parts List for a complete listing of optional accessories.

Questions? Call toll-free, 1-888-TRAXXAS

1/16 SUMMIT
Chassis Assembly

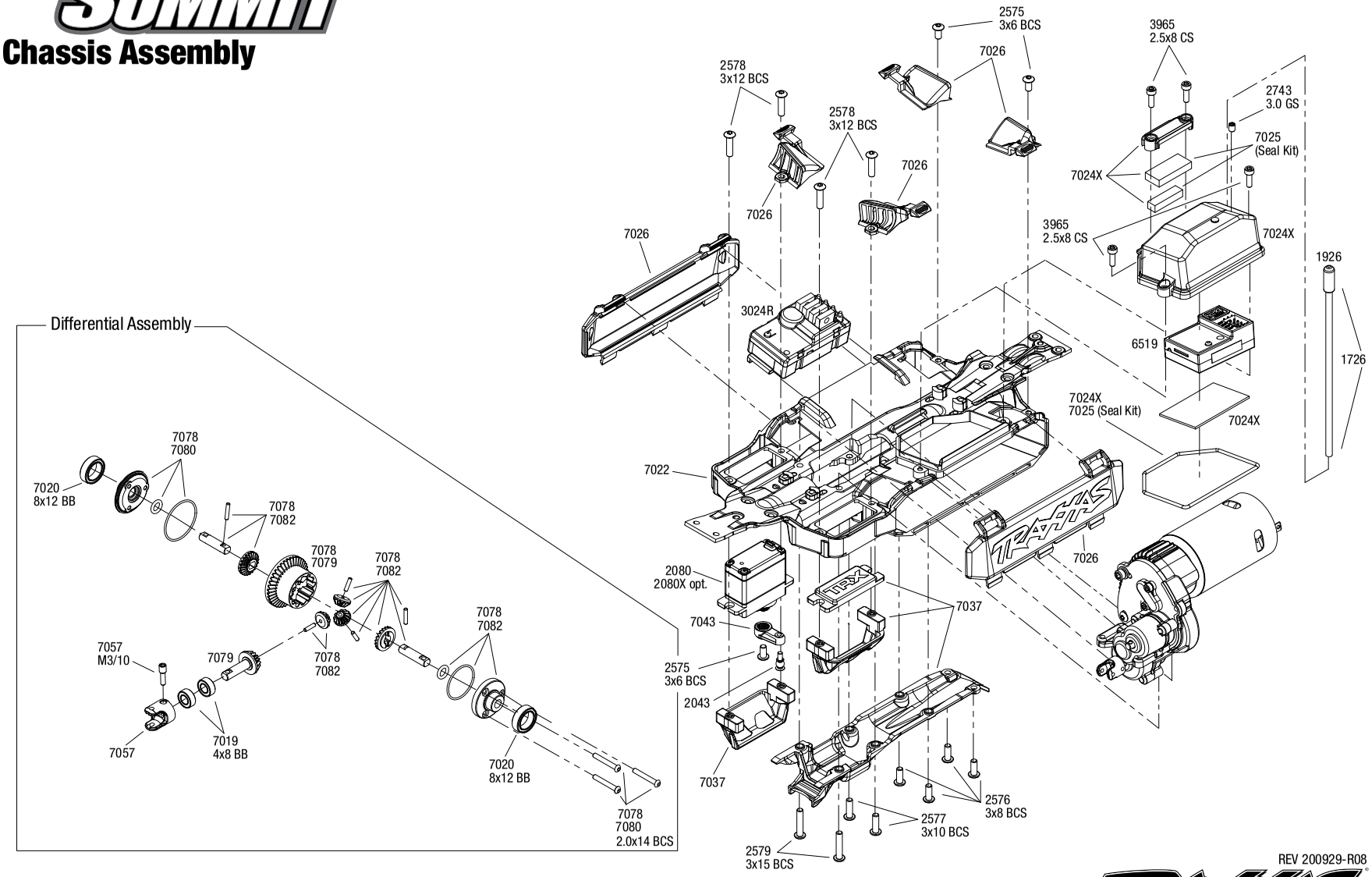

REV 200929-R08

Specifications on this page are subject to change without notice. Every attempt has been made to ensure the accuracy of this drawing; however, Traxxas cannot be held responsible for typographical or other errors.

See Parts List for a complete listing of optional accessories.

1/16 SUMMIT
Rear Assembly

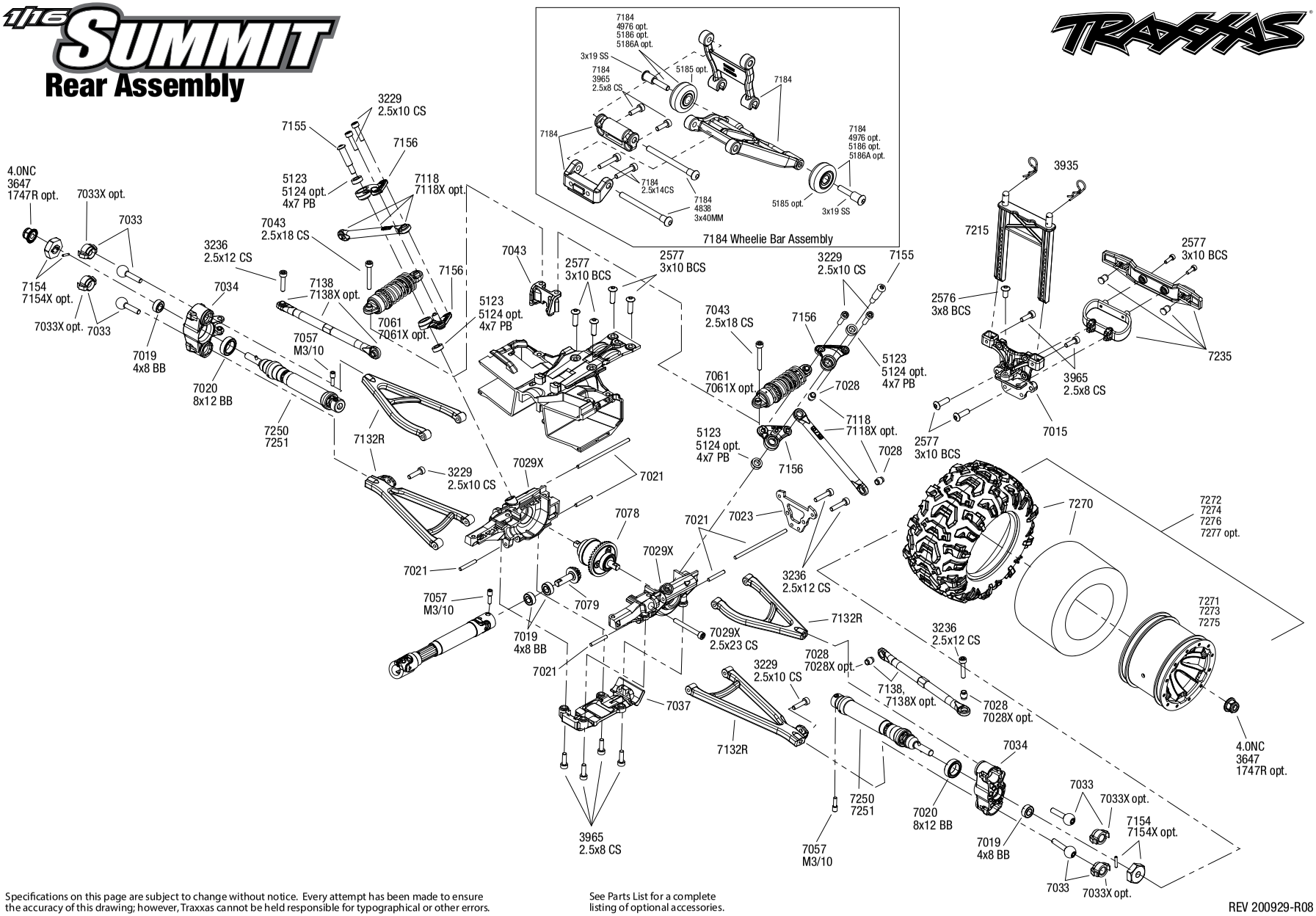

Specifications on this page are subject to change without notice. Every attempt has been made to ensure the accuracy of this drawing; however, Traxxas cannot be held responsible for typographical or other errors.

See Parts List for a complete listing of optional accessories.

REV 200929-R08

1/16 SUMMIT® (72054-5)

EXPLODED VIEWS

1/16 SUMMIT Transmission Assembly

REV 200929-R08

Specifications on this page are subject to change without notice. Every attempt has been made to ensure the accuracy of this drawing; however, Traxxas cannot be held responsible for typographical or other errors.

See Parts List for a complete listing of optional accessories.

Exocage and Body

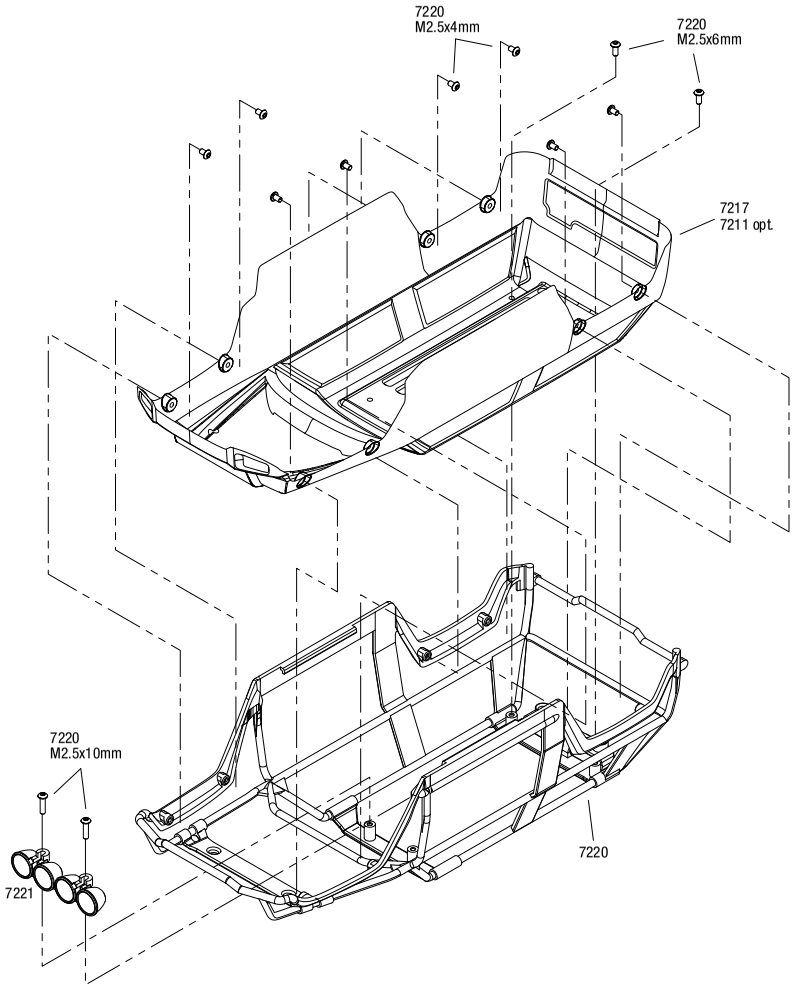

Driveshafts

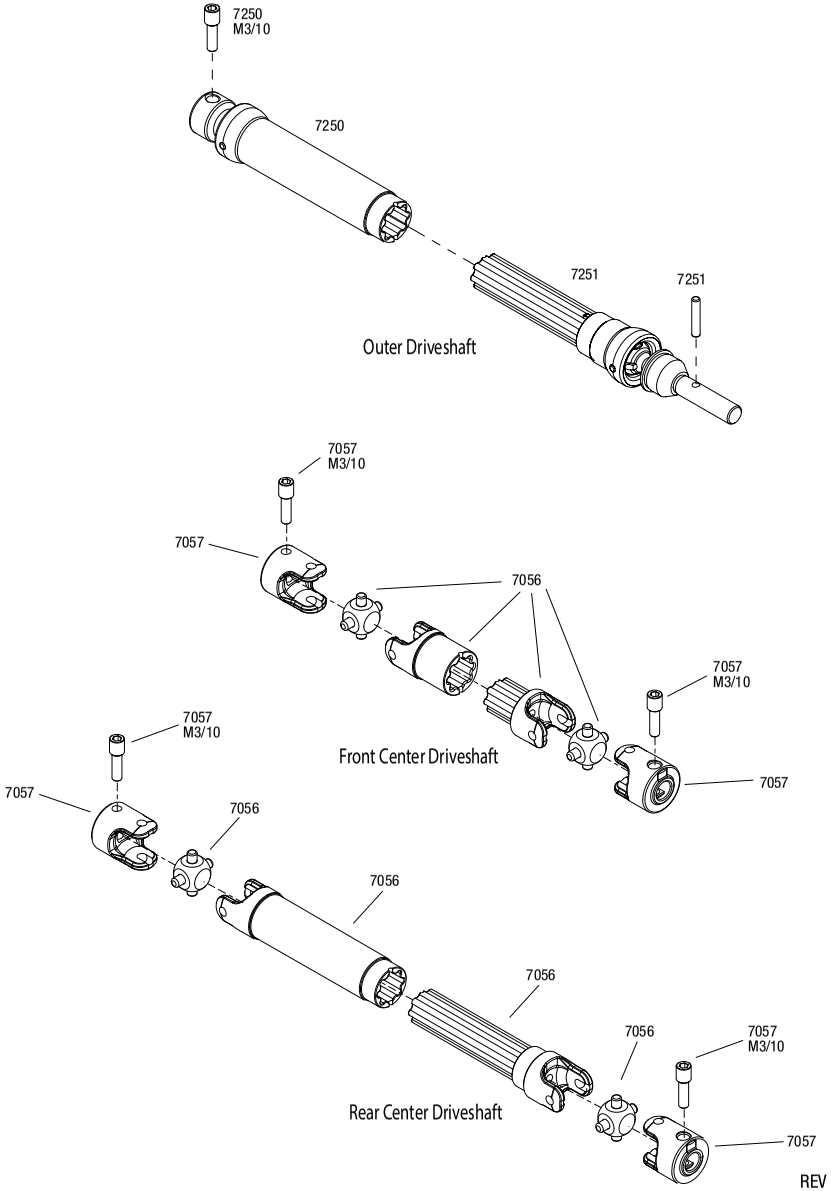

REV 200929-R08

Specifications on this page are subject to change without notice.
Every attempt has been made to ensure the accuracy of this drawing; however, Traxxas cannot be held responsible for typographical or other errors. See Parts List for a complete listing of optional accessories.

1/16 SUMMIT® (72054-5)

PARTS SHOWN IN BOLD ARE OPTIONAL ACCESSORIES.

Part categories and individual part listings are arranged alphabetically.

Bearings & Bushings

5124	**Ball bearings, blue rubber sealed (4x7x2.5mm) (2)**
7019	Ball bearings, blue rubber sealed (4x8x3mm) (2)
5114	**Ball bearings, blue rubber sealed (5x8x2.5mm) (2)**
7020	Ball bearings, blue rubber sealed (8x12x3.5mm) (2)

Body & Accessories

1926	Antenna caps, vinyl (2)/ antenna spool
1726	Antenna, tube (1)/ vinyl antenna cap (1)/ wire retainer (1)
1834	Body clips (12) (standard size)
7215	Body mounts, front & rear
7015	Body mounts, front & rear/ body mount posts, front & rear
4915	Body washers, foam adhesive (10)
6716	**Body washers, foam, 2mm (2)/ 3mm (2)/ 4mm (4)**
7211	**Body, 1/16 Summit (clear, requires painting)/ grille, lights decal sheet**
7217	Body, 1/16 Summit (painted, decals applied)
2514	Decal sheet, racing sponsors
7213	Decal sheets, 1/16th Summit VXL
7220	ExoCage, 1/16th Summit (includes mounting hardware)
7221	Light bar, roof (chrome)
9950	Official Team Traxxas® racing decal set (flag logo/ 6-color)

Bumpers & Skidplates

7235	Bumper, front (1)/ rear (1)/ bumper mount, rear (1)
7037	Skidplate set, front (1)/ rear (1)/ transmission (1)/ steering servo guards (2) / steering servo cover plate (1)

Chassis & Attachments

7015	Body mounts, front & rear/ body mount posts, front & rear
7024X	Box, receiver (sealed)/ wire cover/ foam pads, upper & lower/ silicone grease/ 2.5x8 CS (4)/ 3x4 GS (1)
7023	Bulkhead tie bars, front & rear (blue-anodized aluminum)/ 2.5x6 CS (1)
7030X	Bulkhead, front (left & right halves)/ 3x10mm BCS (4)
7029X	Bulkhead, rear (left & right halves)/ 3x10mm BCS (4)
7022	Chassis
7026	Door, battery compartment (1)/ vents, battery compartment (1 pair) (fits right or left side)
7025	Seal kit, receiver box (includes o-ring, seals, and silicone grease)
7043	Steering arm (upper & lower)/ steering link/ servo horn/ servo saver/ servo saver spring/ servo horn mount/ ball stud (2)/ shock mounts, front & rear/ 2.5x18mm CS (4)
7184	**Wheelie bar, assembled**

Differential Components

7019	Ball bearings, blue rubber sealed (4x8x3mm) (2)
7020	Ball bearings, blue rubber sealed (8x12x3.5mm) (2)
7080	Cover plates, differential (front or rear)/ gaskets (2)/ o-rings (2)/ 2x14mm BCS (4)
7078	Differential assembly, complete
7014	**Differential kit, center (complete)**
7381	Differential locker (2)
5136X	**Differential oil kit (1 each: 10K, 30K, 50K weights)**
7082	Gear set, differential (output gears (2)/ spider gears (3))/ differential output shafts (2)/ 1.5x6mm pin (3)/ 1.5x8mm pin (2)
5130	**Oil, differential (100K wt) (0.7 oz (20cc))**
5135	**Oil, differential (10K wt)**
5136	Oil, differential (30K wt)
5039	**Oil, differential (500K wt)**
5137	**Oil, differential (50K wt)**
7014X	**Rebuild kit, center differential (includes o-rings and diff gear covers)**
7079	Ring gear, differential/ pinion gear, differential

Driveline Components

7034	Axle carriers, left & right (2 each)
7250	Driveshaft assembly, inner (1) (fits front & rear, differential side)
7251	Driveshaft assembly, outer (1) (fits front & rear, stub axle side)
7250R	**Driveshafts, center (steel constant-velocity) front (1), rear (1) (fully assembled)**
7056	Half shafts, center front (1), center rear (1) (internal splined half shafts (2)/external splined half shaft) (2))/ metal u-joints (4)
7154	Wheel hubs, hex (4)/ axle pins (1.5x8mm) (4)
7154X	**Wheel hubs, hex, aluminum (blue-anodized) (4)**
7057	Yokes, differential and transmission (2)/ 3x10mm screw pin (2)

Front Suspension

7033X	**Aluminum caps, pivot ball (threaded aluminum, hard-anodized with PTFE-coating) (8)/ hex wrench, 5mm**
7034	Axle carriers, left & right (2 each)
7023	Bulkhead tie bars, front & rear (blue-anodized aluminum)/ 2.5x6 CS (1)
7030X	Bulkhead, front (left & right halves)/ 3x10mm BCS (4)
7028	Hollow balls (20)
7028X	**Hollow balls, steel (machined)**
7033	Pivot balls (4)/ pivot ball caps (4)
7118G	**Push rod (molded composite) (green) (4)/ hollow balls (8)**
7118	Push rod (molded composite) (red) (4)/ hollow balls (8)
7118X	**Push rods, aluminum (red-anodized) (4) (assembled with rod ends)**
7155	Rocker arm post, steel (4)
7156	Rocker arm set, long travel/ plastic bushings (8)
7158	**Rocker arm set, progressive-2/ plastic bushings (8)**
2523	Screws, 2.5x10mm countersunk machine (hex drive) (6)
7043	Steering arm (upper & lower)/ steering link/ servo horn/ servo saver/ servo saver spring/ servo horn mount/ ball stud (2)/ shock mounts, front & rear/ 2.5x18mm CS (4)
7131	Suspension arm set, front (includes upper right & left and lower right & left arms)
7021	Suspension pin set (front or rear), 2x46mm (2), 2x14mm (4)

Hardware

5124	**Ball bearings, blue rubber sealed (4x7x2.5mm) (2)**
7019	Ball bearings, blue rubber sealed (4x8x3mm) (2)
5114	**Ball bearings, blue rubber sealed (5x8x2.5mm) (2)**
7020	Ball bearings, blue rubber sealed (8x12x3.5mm) (2)
5123	Bellcrank bushings (plastic) (4x7x2.5mm) (4)
2545	Bellcrank bushings (plastic) (5x8x2.5mm) (4)
1834	Body clips (12) (standard size)
5150	E-clips, 1.5mm (24)
5477	Flat wrench, 5mm (blue-anodized aluminum)
7028	Hollow balls (20)
7028X	**Hollow balls, steel (machined)**
2745	Nuts, 3mm nylon locking (12)
3647	Nuts, 4mm flanged nylon locking (steel, serrated) (8)
1747R	**Nuts, aluminum, flanged, serrated (4mm) (blue-anodized) (4)**
1747G	**Nuts, aluminum, flanged, serrated (4mm) (green-anodized) (4)**
1747P	**Nuts, aluminum, flanged, serrated (4mm) (pink-anodized) (4)**
7155	Rocker arm post, steel (4)
7059	**Rod ends (8)/ hollow balls (8)**
3229	Screws, 2.5x10mm cap-head machine (hex drive) (6)
2523	Screws, 2.5x10mm countersunk machine (hex drive) (6)
3236	Screws, 2.5x12mm cap-head machine (6)
2526	Screws, 2.5x12mm countersunk machine (hex drive) (6)
3215	Screws, 2.5x6mm cap-head machine (hex drive) (6)
3965	Screws, 2.5x8mm cap-head machine (6)
2577	Screws, 3x10mm button-head machine (hex drive) (6)
3159	Screws, 3x10mm cap-head machine (hex drive) (6)/ lock washers (6)/ hex wrench
2578	Screws, 3x12mm button-head machine (hex drive) (6)
2579	Screws, 3x15mm button-head machine (hex drive) (6)
2575	Screws, 3x6mm button-head machine (hex drive) (6)
2576	Screws, 3x8mm button-head machine (hex drive) (6)
2743	Set (grub) screws, 3mm hardened (12)

LED Lights

7287	LED light bar, roof (chrome)/ light harness (4 clear, 2 red)/ wire tie mount (2)/ wire tie (3) (requires power supply #7286)
7288	LED lights, chassis harness (4 clear, 2 red) (1)/ wire tie (3) (requires power supply #7286)
7286X	LED lights, power supply (regulated, 3V, 0.5-amp)

Motors & Electronics

2082	Gear set (for 2080 micro waterproof servo)
2082X	**Gear set, metal (for 2080X micro waterproof servo)**
3374	**Heat sink, Velineon® 380 brushless motor, aluminum (blue-anodized)**
7060	**Motor mount, finned aluminum**
7360	Motor mount, finned aluminum (for 550 motors)
3785	Motor, Titan® 12T (12-Turn, 550 size)
3371	**Motor, Velineon® Mini Maxx® 380, brushless (assembled with 16-gauge wire and gold-plated connectors)**
2081	Servo case/ gaskets (for 2080 micro waterproof servo)

2081X	**Servo case/ gaskets (for 2080X metal gear, micro, waterproof servo)**
2080	Servo, micro, waterproof
2080X	**Servo, micro, waterproof, metal gear**
3370	**Velineon® VXL-3m Brushless Power System, waterproof (includes waterproof VXL-3m ESC and Velineon 380 motor)**
3375	**VXL-3m Electronic Speed Control, waterproof (brushless)**
3024R	XL 2.5 Electronic Speed Control, waterproof

Radio System, Batteries & Chargers

2820X	**2200mAh 7.4v 2-Cell 25C LiPo Battery**
2976	**AC to DC converter, 40W**
2938X	**Adapter, Traxxas® iD® LiPo battery (adapts Traxxas iD batteries to separate balance ports)**
2943	**Battery charge indicators (green (4), blue (4), grey (4))**
6548	Battery door, transmitter (replacement for #6516, 6517, 6528, 6529, 6530 transmitters)
2914	**Battery, Power Cell AA Alkaline (4)**
2925X	Battery, Series 1 Power Cell, 1200mAh (NiMH, 6-C flat, 7.2V, 2/3A)
2921X	Charger, A/C, 350 mAh (6 cell, NiMH)
2974	**Charger, DC, 2 amp (5 - 7 cell, 6.0 - 8.4 volt, NiMH)**
2972	**Charger, EZ-Peak® Dual, 100W, NiMH/LiPo with iD® Auto Battery Identification**
2973	**Charger, EZ-Peak® Live Dual, 200W, NiMH/LiPo with iD® Auto Battery Identification**
2971	**Charger, EZ-Peak® Live, 100W, NiMH/LiPo with iD® Auto Battery Identification**
2970	**Charger, EZ-Peak® Plus, 4 amp, NiMH/LiPo with iD® Auto Battery Identification**
6543	**Connector, power tap (with cable) (short)/ wire tie**
2978	**Fuse, charger, 5A (2) (for #2974, 2975, 2977)**
2082	Gear set (for 2080 micro waterproof servo)
2082X	**Gear set, metal (for 2080X micro waterproof servo)**
2968X	**LiPo cell voltage checker/balancer (includes #2938X adapter for Traxxas® iD® batteries)**
2968	**LiPo cell voltage checker/balancer (requires #2938X adapter for Traxxas® iD® batteries)**
6535	**Mount, temperature sensor (electric motors)/ wire tie/ thermal pad**
6519	Receiver, micro, TQ 2.4GHz (3-channel)
6533	**Receiver, micro, TQi 2.4GHz with telemetry & TSM (5-channel)**
6518	**Receiver, micro, TQi 2.4GHz with telemetry (5-channel)**
6522	**Sensor, RPM (short)/ 3x4mm BCS (2)**
6523	**Sensor, temperature and voltage (short)**
2081	Servo case/ gaskets (for 2080 micro waterproof servo)
2081X	**Servo case/ gaskets (for 2080X metal gear, micro, waterproof servo)**
2080	Servo, micro, waterproof
2080X	**Servo, micro, waterproof, metal gear**
6538	**Telemetry trigger magnet holders, spur gear/ magnet, 5x2mm (1)/ 3x8mm CCS (3)/ 3x10mm CCS (3)**
6540	**Telemetry trigger magnet, 5X2mm (1)**
2928	**Temperature sensor, EZ-Peak Plus**
6516	Transmitter, TQ 2.4GHz, 2-channel (transmitter only)
6528	**Transmitter, TQi Traxxas Link™ enabled, 2.4GHz high output, 2-channel (transmitter only)**
6529	**Transmitter, TQi Traxxas Link™ enabled, 2.4GHz high output, 3-channel (transmitter only)**
6530	**Transmitter, TQi Traxxas Link™ enabled, 2.4GHz high output, 4-channel (transmitter only)**
6511	**Traxxas Link™ Wireless Module**
3375	**VXL-3m Electronic Speed Control, waterproof (brushless)**
3064X	**Wire harness, parallel battery connection (compatible with Traxxas® High Current Connector, NiMH only)**
3024R	XL 2.5 Electronic Speed Control, waterproof

Ready-To-Race Model

72054-5	Summit: 1/16-Scale 4WD Electric Extreme Terrain Monster Truck with TQ 2.4GHz radio system

Rear Suspension

7033X	**Aluminum caps, pivot ball (threaded aluminum, hard-anodized with PTFE-coating) (8)/ hex wrench, 5mm**
7034	Axle carriers, left & right (2 each)
7023	Bulkhead tie bars, front & rear (blue-anodized aluminum)/ 2.5x6 CS (1)
7029X	Bulkhead, rear (left & right halves)/ 3x10mm BCS (4)
7028	Hollow balls (20)
7028X	**Hollow balls, steel (machined)**
7033	Pivot balls (4)/ pivot ball caps (4)
7118G	**Push rod (molded composite) (green) (4)/ hollow balls (8)**
7118	Push rod (molded composite) (red) (4)/ hollow balls (8)
7118X	**Push rods, aluminum (red-anodized) (4) (assembled with rod ends)**
7155	Rocker arm post, steel (4)
7156	Rocker arm set, long travel/ plastic bushings (8)
7158	**Rocker arm set, progressive-2/ plastic bushings (8)**
2523	Screws, 2.5x10mm countersunk machine (hex drive) (6)
7043	Steering arm (upper & lower)/ steering link/ servo horn/ servo saver/ servo saver spring/ servo horn mount/ ball stud (2)/ shock mounts, front & rear/ 2.5x18mm CS (4)
7132R	Suspension arm set, rear, extended wheelbase (lengthens wheelbase 10mm) (includes upper right & left and lower right & left arms)
7021	Suspension pin set (front or rear), 2x46mm (2), 2x14mm (4)
7138G	**Toe link, front & rear (molded composite) (green) (4)/ hollow balls (8)**
7138	Toe link, front & rear (molded composite) (red) (4)/ hollow balls (8)
7138X	**Toe links, aluminum (red-anodized) (4) (assembled with rod ends and threaded inserts)**

Shocks (GTR)

7066X	**Body, GTR shock (hard-anodized, PTFE-coated aluminum) (1)**
7066	Body, GTR shock (molded composite) (2)
7065	Caps and spring retainers, GTR shock (upper cap (2)/ hollow balls (4)/ bottom cap (2)/ upper retainer (2)/ lower retainer (2))
7028	Hollow balls (20)
7067	Piston, damper (2x0.5mm hole, red) (4)/ travel limiters (4)
7062	Rebuild kit, GTR composite shocks (x-rings, bladders, pistons, e-clips, shock rod ends, hollow balls) (renews 2 shocks)
7063	Shaft, GTR shock (2)
7063T	**Shaft, GTR shock (TiN-coated) (4)**
7061	Shocks, GTR composite (assembled, without springs) (2)
7061X	**Shocks, GTR hard anodized, PTFE-coated bodies with TiN shafts (fully assembled, without springs) (4)**

Slipper Clutch Components

7152	Slipper clutch, complete (includes slipper clutch hub, clutch pad, spring, 3.0mm NL, 1.5x6mm pin)

Springs

7145	**Spring, shock (GTR) (1.76 rate, orange) (1 pair)**
7146	**Spring, shock (GTR) (1.92 rate, green) (1 pair)**
7147	**Spring, shock (GTR) (2.06 rate, tan) (1 pair)**
7148	**Spring, shock (GTR) (2.22 rate, black) (1 pair)**
7244	**Spring, shock (GTR) (2.77 rate, pink) (1 pair)**
7245	Spring, shock (GTR) (2.925 rate, blue) (1 pair)
7246	**Spring, shock (GTR) (3.2 rate, purple) (1/16 Summit) (1 pair)**
7244A	**Spring, shock (nickel finish) (GTR) (2.77 rate, pink) (1 pair)**
7245A	**Spring, shock (nickel finish) (GTR) (2.925 rate, blue) (1 pair)**

Spur Gears & Pinion Gears

2416	**Gear, 16-T pinion (48-pitch) / set screw**
1918	**Gear, 18-T pinion (48-pitch) / set screw**
2419	**Gear, 19-T pinion (48-pitch) / set screw**
2421	Gear, 21-T pinion (48-pitch) / set screw
4725	**Gear, pinion (25-tooth) (48-pitch) / set screw**
7045R	**Spur gear, 45-tooth**
7046R	**Spur gear, 50-tooth**
7047R	Spur gear, 55-tooth

Steering Components

5114	**Ball bearings, blue rubber sealed (5x8x2.5mm) (2)**
2545	Bellcrank bushings (plastic) (5x8x2.5mm) (4)
7043	Steering arm (upper & lower)/ steering link/ servo horn/ servo saver/ servo saver spring/ servo horn mount/ ball stud (2)/ shock mounts, front & rear/ 2.5x18mm CS (4)
7138G	**Toe link, front & rear (molded composite) (green) (4)/ hollow balls (8)**
7138	Toe link, front & rear (molded composite) (red) (4)/ hollow balls (8)
7138X	**Toe links, aluminum (red-anodized) (4) (assembled with rod ends and threaded inserts)**

Suspension Linkage

7028	Hollow balls (20)
7118G	**Push rod (molded composite) (green) (4)/ hollow balls (8)**
7118	Push rod (molded composite) (red) (4)/ hollow balls (8)
7118X	**Push rods, aluminum (red-anodized) (4) (assembled with rod ends)**
7021	Suspension pin set (front or rear), 2x46mm (2), 2x14mm (4)
7138G	**Toe link, front & rear (molded composite) (green) (4)/ hollow balls (8)**
7138	Toe link, front & rear (molded composite) (red) (4)/ hollow balls (8)
7138X	**Toe links, aluminum (red-anodized) (4) (assembled with rod ends and threaded inserts)**

1/16 SUMMIT® (72054-5)

Tires & Wheels

7265	**Tires & wheels, assembled (grey wheels (dual profile, 1.5" outer and 2.2" inner), dual profile tires) (2)**
7277	**Tires and wheels, assembled, glued (Geode black, beadlock style wheels, Canyon AT tires, foam inserts) (1 left, 1 right)**
7274	Tires and wheels, assembled, glued (Geode chrome, blue beadlock style wheels, Canyon AT tires, foam inserts) (1 left, 1 right)
7272	Tires and wheels, assembled, glued (Geode chrome, red beadlock style wheels, Canyon AT tires, foam inserts) (1 left, 1 right)
7276	Tires and wheels, assembled, glued (Geode chrome, yellow beadlock style wheels, Canyon AT tires, foam inserts)(1 left, 1 right)
7270	Tires, Canyon AT 2.2" (2)/ foam inserts (2)
7267	**Tires, dual profile (1.5" outer and 2.2" inner) (left and right)**
7266	**Wheels, dual profile (1.5" outer and 2.2" inner) (2)**
7273	Wheels, Geode 2.2" (chrome, blue beadlock style) (12mm hex) (2)
7271	Wheels, Geode 2.2" (chrome, red beadlock style) (12mm hex) (2)
7275	Wheels, Geode 2.2" (chrome, yellow beadlock style) (12mm hex) (2)

Transmission Components

7077R	Cover, gear/ motor mount hinge post/ 3x10mm CS with split and flat washers (1)/ 3x8mm BCS (1)
7014	**Differential kit, center (complete)**
7093	Gear set, transmission (includes 18T, 25T input gears, 13T idler gear (steel), 35T output gear, M3x13.75 screw pin)
7091	Gearbox halves, front & rear
7092	Input shaft/ output shaft
7090	Plate, motor
7014X	**Rebuild kit, center differential (includes o-rings and diff gear covers)**
7152	Slipper clutch, complete (includes slipper clutch hub, clutch pad, spring, 3.0mm NL, 1.5x6mm pin)

Traxxas Tools

3433X	**Body reamer (aluminum handle)**
3433	**Body reamer (plastic handle)**
3436	**Cap, body reamer**
3432	**Scissors, curved tip**
3431	**Scissors, straight tip**
8712	**Speed Bit Essentials Set, hex and nut driver, 7-piece, includes premium handle (medium), travel pouch, hex drivers (straight: 1.5mm, 2.0mm, 2.5mm) and nut drivers (5.0mm, 5.5mm, 7.0mm, and 8.0mm), 1/4" drive**
8721	**Speed bit handle, medium (one piece)**
8720	**Speed bit handle, premium, large (rubber overmold)**
8722	**Speed bit handle, premium, medium (rubber overmold)**
8710	**Speed Bit Master Set, hex and nut driver, 13-piece, includes premium handle (medium), travel pouch, hex drivers (straight: 1.5mm, 2.0mm, 2.5mm, 3.0mm), (ball-end: 2.0mm, 2.5mm, 3.0mm), and nut drivers (4.00mm, 4.50mm, 5.00mm, 5.50mm, 7.00mm, 8.00mm),**
8711	**Speed Bit Master Set, hex driver, 7-piece straight and ball end, includes premium handle (medium), travel pouch, hex drivers (straight: 1.5mm, 2.0mm, 2.5mm, 3.0mm) (ball end: 2.0mm, 2.5mm, 3.0mm), 1/4" drive**
8719	**Speed Bit Master Set, nut driver, 6-piece, includes premium handle (medium), travel pouch, and nut drivers (4.0mm, 4.5mm, 5.0mm, 5.5mm, 7.0mm, 8.0mm), 1/4" drive**
8716	**Speed Bit Set, hex driver, 2-piece ball-end (2.0mm, 2.5mm), 1/4" drive**
8716X	**Speed Bit Set, hex driver, 3-piece ball-end (2.0mm, 2.5mm, 3.0mm), 1/4" drive**
8715	**Speed Bit Set, hex driver, 3-piece straight (1.5mm, 2.0mm, 2.5mm), 1/4" drive**
8715X	**Speed Bit Set, hex driver, 4-piece straight (1.5mm, 2.0mm, 2.5mm, 3.0mm), 1/4" drive**
3415	**Tool set with pouch (includes 1.5mm, 2.0mm, 2.5mm, 3.0mm, 3.5mm, 4mm drivers/ 4mm, 5mm, 5.5mm, 7mm and 8mm nut drivers/ 2mm, 4mm, and 5mm slotted screwdrivers/ #00 Phillips, #0 Phillips, and #1 Phillips screwdrivers/ 4mm and 8mm wrench/ driver handle**

Turnbuckles & Threaded Rods

7028	Hollow balls (20)
7118G	**Push rod (molded composite) (green) (4)/ hollow balls (8)**
7118	Push rod (molded composite) (red) (4)/ hollow balls (8)
7118X	**Push rods, aluminum (red-anodized) (4) (assembled with rod ends)**
7138G	**Toe link, front & rear (molded composite) (green) (4)/ hollow balls (8)**
7138	Toe link, front & rear (molded composite) (red) (4)/ hollow balls (8)
7138X	**Toe links, aluminum (red-anodized) (4) (assembled with rod ends and threaded inserts)**

If you have questions or need technical assistance, call Traxxas at:

1-888-TRAXXAS

(1-888-872-9927) (U.S. residents only)

For orders, calls outside the U.S., and other information, call 972-549-3000, or fax to 972-549-3011 e-mail Traxxas at support@Traxxas.com

TRAXXAS.COM

REV. 201002 1236

Summit · X-Maxx · Unlimited Desert Racer · E-Revo Brushless · MAXX



THE PINNACLE OF MONSTER TRUCK PERFORMANCE

The pinnacle of Traxxas innovation. The peak of brushless horsepower. Together, they represent the ultimate in monster truck performance. Squeeze the trigger, and X-Maxx, Maxx, E-Revo VXL Brushless, or the Summit launches off the line and over any terrain you put in its path. Electric horsepower surges through the heavy-duty drivetrain, escaping only where the rubber meets the road to turn torque and RPM into pure velocity. The laws of physics and aerodynamics bend as Traxxas' most powerful monster trucks punch through the wind.

TRAXXAS
The Fastest Name In Radio Control®

ELECTRIC MONSTER TRUCK MODELS

SUMMIT

MODEL 56076-4

1/10 SCALE 4WD
EXTREME TERRAIN MONSTER TRUCK



REMOTE LOCKING DIFFERENTIAL

TITAN 775 MOTOR

TQi 2.4GHz TRANSMITTER COMPATIBLE WITH TRAXXAS LINK WIRELESS MODULE

UNSTOPPABLE! OFF-ROAD ADVENTURE WITHOUT LIMITS!

Whether scaling near-vertical climbs or speeding down the trail, Summit lets you experience R/C adventure without limits or compromise. The secret to Summit's incredible versatility is its exclusive T-Lock™ differentials and High-Low transmission. With the flip of a switch, you can lock the Summit's differentials for unbeatable traction to rock-crawl or conquer any slippery situation. No stopping or additional parts required; you command the T-Lock system from the TQi 4-channel transmitter. A 70:1 Low range gives Summit gravity-defying torque; shift into High, and Summit tears down the trail with a 25:1 ratio for speed no "crawler" can match. Designed from the start to thrive in conditions that send other trucks running back to the workbench, Summit is built for unstoppable off-road performance in all environments—even mud, water and snow, thanks to its fully waterproof electronics.

SUMMIT
Front Assembly

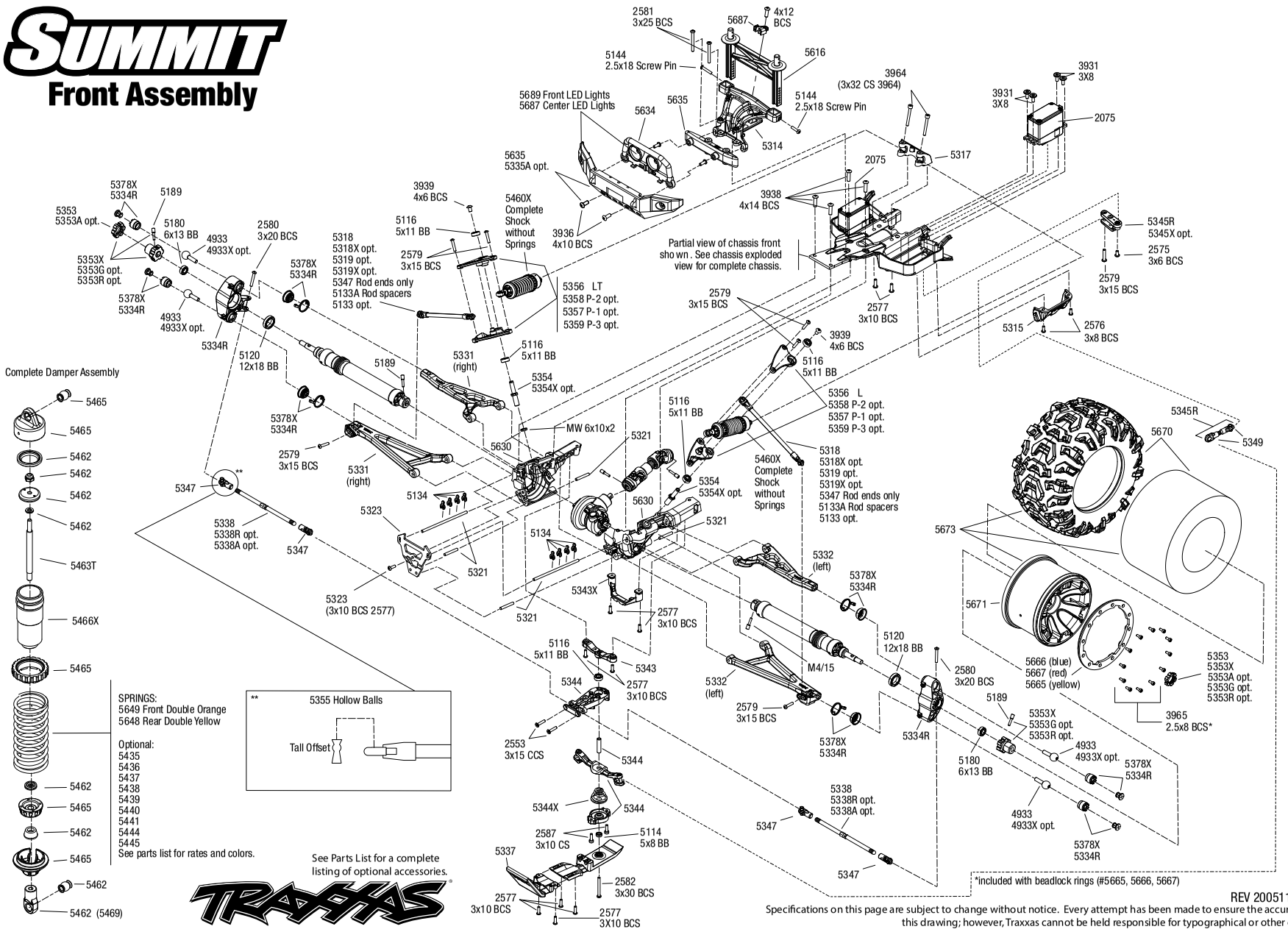

REV 200511-R07

Specifications on this page are subject to change without notice. Every attempt has been made to ensure the accuracy of this drawing; however, Traxxas cannot be held responsible for typographical or other errors.

SUMMIT® (56076-4)

See Parts List for a complete listing of optional accessories.

REV 200511-R07

Specifications on this page are subject to change without notice. Every attempt has been made to ensure the accuracy of this drawing; however, Traxxas cannot be held responsible for typographical or other errors.

Questions? **Call toll-free, 1-888-TRAXXAS**

SUMMIT
Rear Assembly

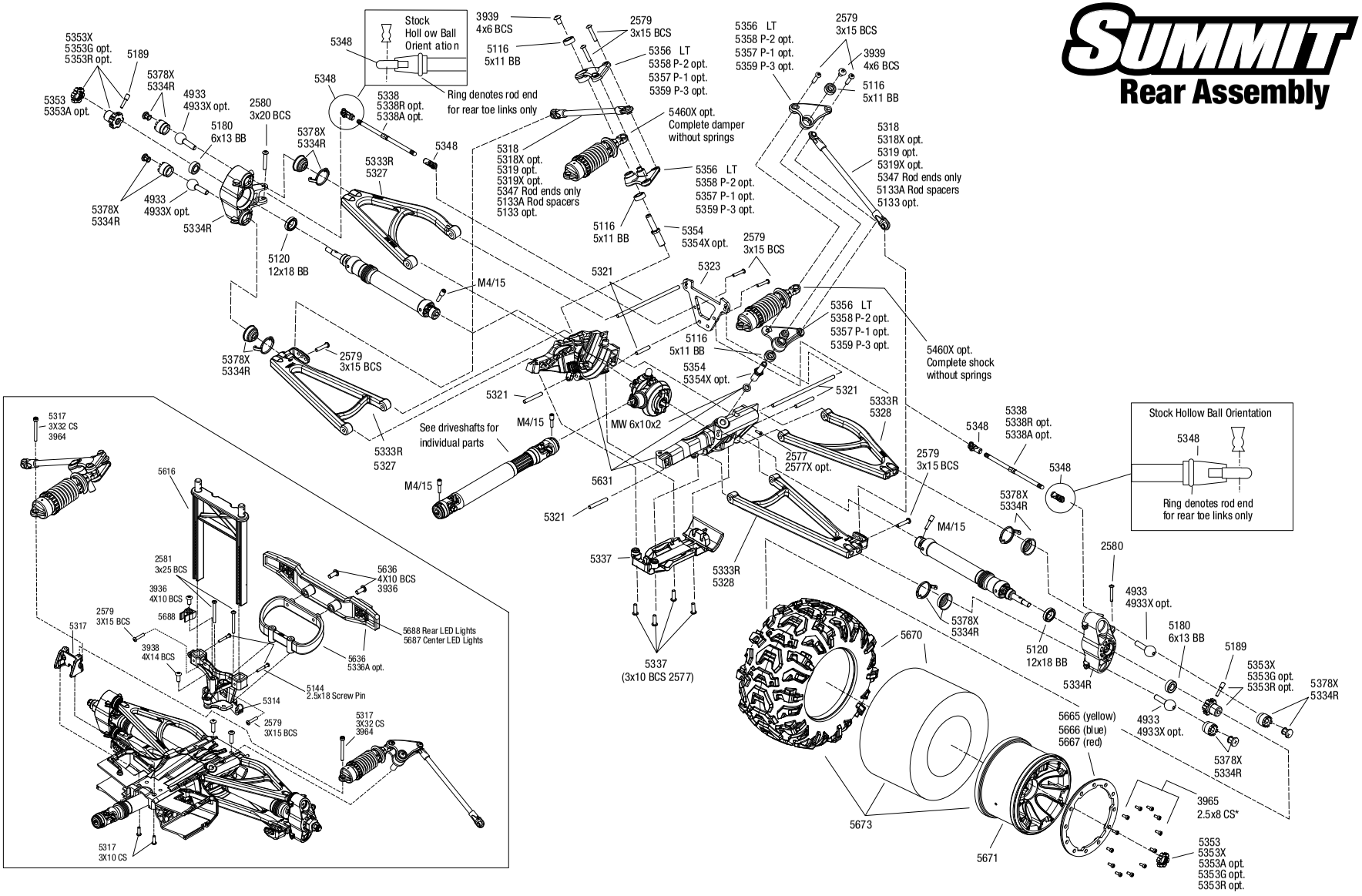

TRAXXAS

See Parts List for a complete listing of optional accessories.

*included with beadlock rings (#5665,5666,5667)

REV 200511-R07

Specifications on this page are subject to change without notice. Every attempt has been made to ensure the accuracy of this drawing; however ,Traxxas cannot be held responsible for typographical or other errors.

SUMMIT® (56076-4)

SUMMIT Transmission Assembly

REV 200511-R07

Specifications on this page are subject to change without notice. Every attempt has been made to ensure the accuracy of this drawing; however, Traxxas cannot be held responsible for typographical or other errors.

See Parts List for a complete listing of optional accessories.

Questions? **Call toll-free, 1-888-TRAXXAS**

SUMMIT
Shift Assembly

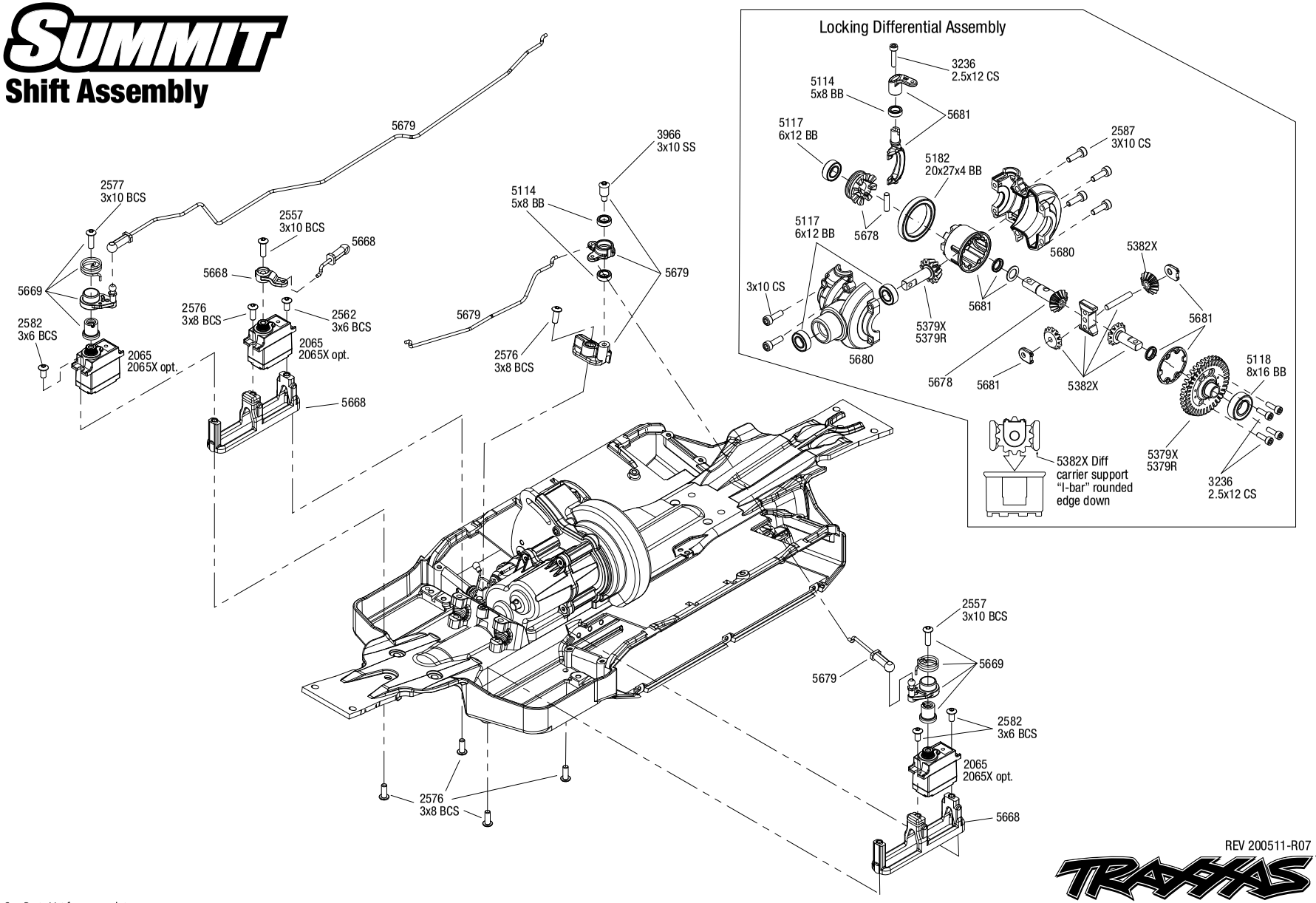

REV 200511-R07

See Parts List for a complete listing of optional accessories.

Specifications on this page are subject to change without notice. Every attempt has been made to ensure the accuracy of this drawing; however, Traxxas cannot be held responsible for typographical or other errors.

Questions? Call toll-free, 1-888-TRAXXAS

SUMMIT TRAXXAS Driveshaft Assembly

Exocage Assembly

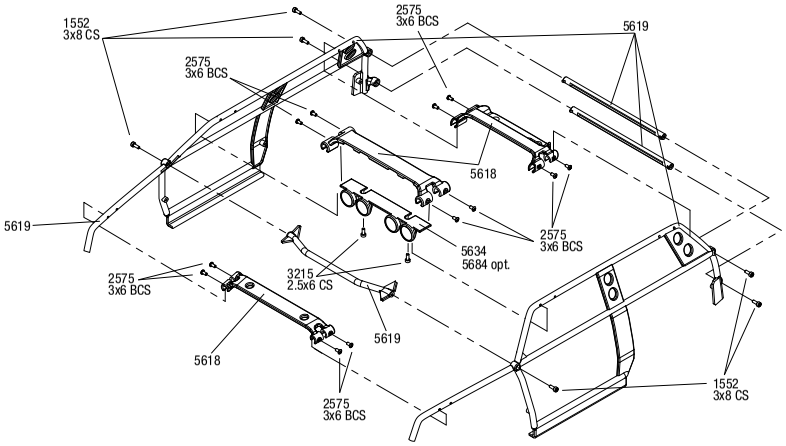

Summit Body Assembly (view from bottom)

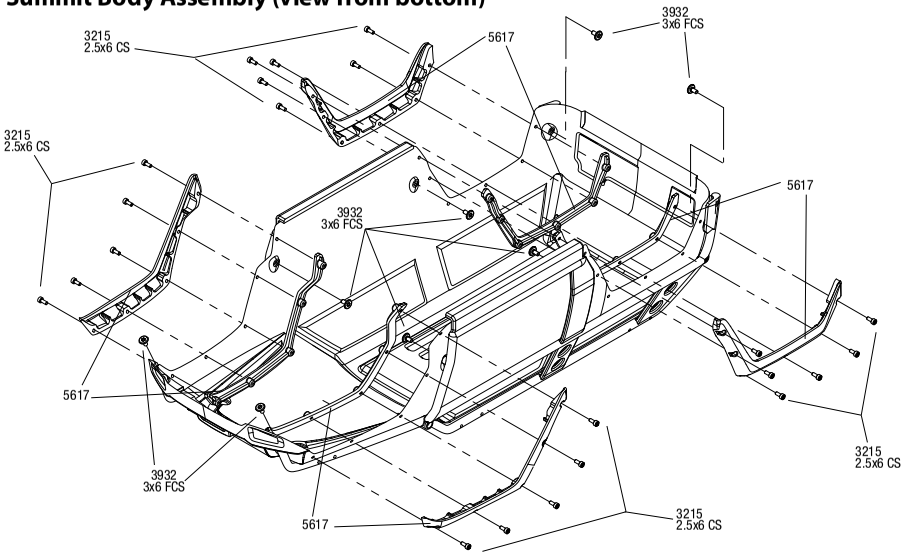

Every attempt has been made to ensure the accuracy of this drawing; however, Traxxas cannot be held responsible for typographical or other errors. See Parts List for a complete listing of optional accessories.

Center Front Driveshaft Assembly

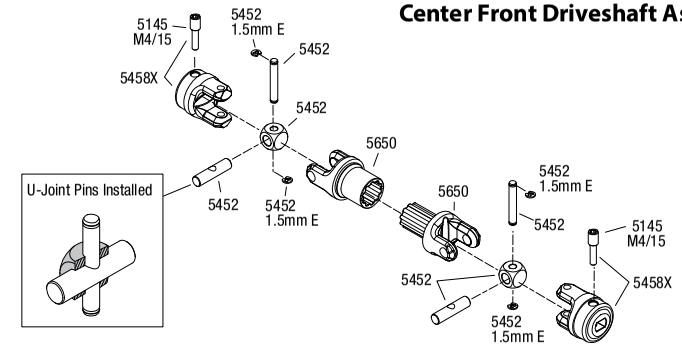

Center Rear Driveshaft Assembly

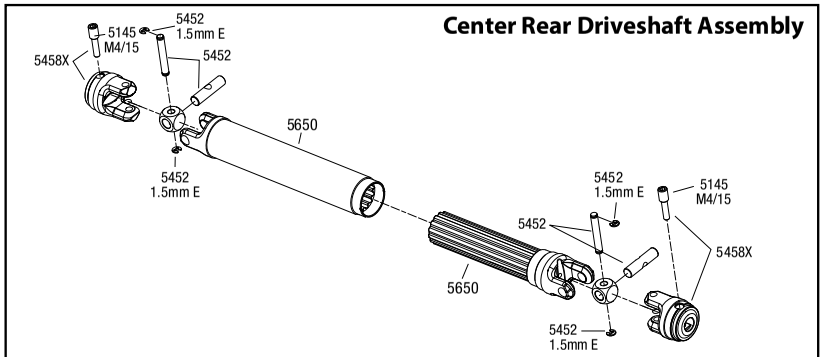

Axle Driveshaft Assembly

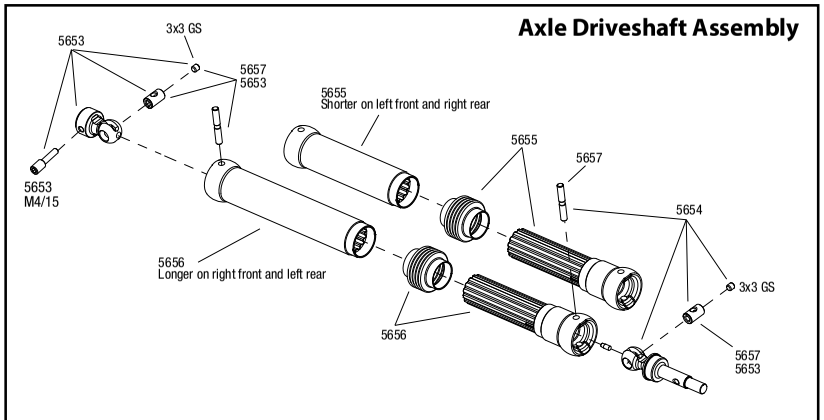

Specifications on this page are subject to change without notice.

REV 200511-R07

PARTS SHOWN IN BOLD ARE OPTIONAL ACCESSORIES.

Part categories and individual part listings are arranged alphabetically.

Bearings & Bushings

5120 Ball bearings, blue rubber sealed (12x18x4mm) (2)
5182 Ball bearings, blue rubber sealed (20x27x4mm) (2)
5116 Ball bearings, blue rubber sealed (5x11x4mm) (2)
5114 Ball bearings, blue rubber sealed (5x8x2.5mm) (2)
5117 Ball bearings, blue rubber sealed (6x12x4mm) (2)
5180 Ball bearings, blue rubber sealed (6x13x5mm) (2)
5118 Ball bearings, blue rubber sealed (8x16x5mm) (2)

Body & Accessories

1926 Antenna caps, vinyl (2)/ antenna spool
5526 Antenna crimp nut, aluminum (blue-anodized)/ antenna nut tools
5526R Antenna crimp nut, aluminum (red-anodized)/ antenna nut tools
1726 Antenna, tube (1)/ vinyl antenna cap (1)/ wire retainer (1)
1834 Body clips (12) (standard size)
3934 Body clips, heavy duty (12)
5616 Body mount posts, front & rear (tall, for Summit)
5314 Body mounts, front & rear/ standard Revo body mount posts, front & rear/ 2.5x18mm screw pins (4)/ 4x10mm BCS (1)
4915 Body washers, foam adhesive (10)
6716 Body washers, foam, 2mm (2)/ 3mm (2)/ 4mm (4)
5612 Body, Summit (clear, requires painting)/ window, grille, lights decal sheet (use #5616 body mount posts)
2514 Decal sheet, racing sponsors
5615 Decal sheets, Summit
5618 ExoCage, cross braces/ 3x6mm BCS (12)
5619 ExoCage, side rails/ hardware
5620 ExoCage, Summit (includes all parts and hardware for 1 complete roll cage)
5617 Fender flairs, front & rear (4)/ fender flair retainers, front & rear (4)/ 2.5x6mm CS (22)
9950 Official Team Traxxas® racing decal set (flag logo/ 6-color)

Bumpers & Skidplates

5335A Bumper, front (chrome)/ bumper mount, front/ 4x10mm BCS (2)/ 3x25mm BCS (2)
5635 Bumper, front/ bumper mount, front/ 4x10mm BCS (2)/ 3x25mm BCS (2)
5336A Bumper, rear (chrome)/ bumper mount, rear/ 4x10mm BCS (2)/ 3x25mm BCS (2)
5636 Bumper, rear/ bumper mount, rear/ 4x10mm BCS (2)/ 3x25mm BCS (2)
5315 Guards, steering servo (2)
5634 Light bar, front bumper (chrome) (1), roof light bar (chrome) (1)
5337 Skid plate set, front (2 pieces, plastic)/ skid plate, rear (1 piece, plastic)

Chassis & Attachments

5616 Body mount posts, front & rear (tall, for Summit)
5314 Body mounts, front & rear/ standard Revo body mount posts, front & rear/ 2.5x18mm screw pins (4)/ 4x10mm BCS (1)
5624 Box, receiver (sealed)/ foam pad/ silicone grease/ 3x8mm BCS (2)/ 2.5x8mm CS (2)/ 3x6mm BCS (2)
5323 Bulkhead tie bars, front & rear (blue-anodized aluminum)
5323R Bulkhead tie bars, front & rear (red-anodized aluminum)
5630 Bulkhead, front (left & right halves)
5631 Bulkhead, rear (left & right halves)
5632 Chassis brace, rear (fits E-Revo®/Summit)
5622X Chassis, E-Revo® & Summit/ foam pad
5157 Cover plates and seals, forward only conversion (Revo®) (Optidrive® blank-out plate, Optidrive® sensor cover, shift fork cover)
5627 Door, battery compartment (2) (fits right or left side)
5315 Guards, steering servo (2)
5634 Light bar, front bumper (chrome) (1), roof light bar (chrome) (1)
5629 Retainer clip, battery (1)/ front clip (1) /rear clip (1)/ foam spacer (1) (for one battery compartment)
5625 Seal kit, receiver box (includes o-ring, seals, and silicone grease)
5317 Shock mounts (front & rear)/ wire clip (1)/ chassis wire clips (4)/ 3x32mm CS (4)/ 3x6mm BCS (1)
5337 Skid plate set, front (2 pieces, plastic)/ skid plate, rear (1 piece, plastic)
5628 Vent, battery compartment (includes latch) (1 pair, fits left or right side)

Differential Components

5119 Ball bearings, blue rubber sealed (10x15x4mm) (2)
5182 Ball bearings, blue rubber sealed (20x27x4mm) (2)
5117 Ball bearings, blue rubber sealed (6x12x4mm) (2)
5118 Ball bearings, blue rubber sealed (8x16x5mm) (2)
5681 Carrier, differential (heavy duty)/ differential fork/ linkage arms (front & rear)/x-ring gaskets (2)/ ring gear gasket/ bushings (2)/ 6.5x10x0.5 TW
5653 Differential CV output drive (machined steel) (1)/ screw pin (with threadlock) (1)/ cross pin (1)/ drive pin (1)
5136X Differential oil kit (1 each: 10K, 30K, 50K weights)
5382X Gear set, differential (output gears (2)/ spider gears (2)/ spider gear shaft/ diff carrier support)
5678 Gear, locking differential output/ differential slider/ 3x12mm screwpin
5680 Housing, differential (front & rear)
5679 Linkage, locking differential (includes ball cup, linkage wires)/ bellcrank/ bellcrank mount/ 3x10mm SS
5130 Oil, differential (100K wt) (0.7 oz (20cc))
5135 Oil, differential (10K wt)
5136 Oil, differential (30K wt)
5137 Oil, differential (50K wt)
5379X Ring gear, differential/ pinion gear, differential
5379R Ring gear, differential/ pinion gear, differential (machined, spiral cut) (front)

Driveline Components

5334R Axle carriers, left & right (1 each) (use with larger 6x13mm ball bearings)/ bearing adapters (for 6x12mm ball bearings) (2)/ dust boot retainers (4)
5657 Cross pin (4)/ drive pin (4)/ set screw (4) (to rebuild 2 driveshafts)
5650R Driveshafts, center E-Revo® (steel constant-velocity) front (1)/ rear (1) (assembled with inner and outer dust boots, for E-Revo & Summit)
5150 E-clips, 1.5mm (24)
5656 Half shaft set, long (plastic parts only) (internal splined half shaft/ external splined half shaft/ rubber boot) (assembled with glued boot) (2 assemblies)
5655 Half shaft set, short (plastic parts only) (internal splined half shaft/ external splined half shaft/ rubber boot) (assembled with glued boot) (2 assemblies)
5650 Half shafts, center (internal splined (3)/ external splined (2)) (plastic parts only)
4955 Pins, axle (2.5x12mm) (4)
5145 Screw pin, 4x15mm (6)
5654 Stub axle, CV style (machined steel) (1)/ cross pin (1)/ drive pin (1)
4954X Wheel hubs, hex, 6061-T6 aluminum (blue) (4)/ axle pins (2.5x10mm) (4)
5353X Wheel hubs, splined, 17mm (blue-anodized) (4)/ wheel nuts, splined, 17mm (blue-anodized) (4)/ screw pins, 4x13mm (with threadlock) (4)
5353G Wheel hubs, splined, 17mm (green-anodized) (4)/ wheel nuts, splined, 17mm (blue-anodized) (4)/ screw pins, 4x13mm (with threadlock) (4)
5353R Wheel hubs, splined, 17mm (red-anodized) (4)/ wheel nuts, splined, 17mm (red-anodized) (4)/ screw pins, 4x13mm (with threadlock) (4)
5353A Wheel nuts, splined, 17mm (green-anodized) (4)

Front Suspension

5334R Axle carriers, left & right (1 each) (use with larger 6x13mm ball bearings)/ bearing adapters (for 6x12mm ball bearings) (2)/ dust boot retainers (4)
5323 Bulkhead tie bars, front & rear (blue-anodized aluminum)
5323R Bulkhead tie bars, front & rear (red-anodized aluminum)
5630 Bulkhead, front (left & right halves)
5134 Caster spacers (4)/ shims (4)
5339 Insert, threaded steel (replacement inserts for TUBES) (includes (1) left and (1) right threaded insert)
5378X Pivot ball caps (4)/ dust boots, rubber (4)/ dust plugs, rubber (4)/ dust boot retainers, black (4), blue (4) (2 pkgs. req. to complete truck)
4933 Pivot balls (4)/ pivot ball cap bushings (4)
4933X Pivot balls, hard-anodized 7075-T6 aluminum (4)/ pivot ball cap bushings (4)
5319X Push rod (aluminum) (assembled with rod ends) (2) (red) (use with #5359 progressive 3 rockers)
5318X Push rod (aluminum) (assembled with rod ends) (2) (use with long travel or #5357 progressive-1 rockers)
5319 Push rod (steel) (assembled with rod ends) (2) (black) (use with #5359 progressive 3 rockers)
5318 Push rod (steel) (assembled with rod ends) (2) (use with long travel or #5357 progressive-1 rockers)
5354 Rocker arm post (steel) (2)
5356 Rocker arm set, long travel (120-T) (use with #5318 or #5318X pushrod)

5357	**Rocker arm set, progressive-1 (90-T) (use with #5318 or #5318X pushrod)**
5358	Rocker arm set, progressive-2 (90-T)/ spacers (red aluminum) (8)
5359	**Rocker arm set, progressive-3 (90-T) (requires pushrods part #5319 or 5319X)**
5347	Rod ends, Revo® (large) with hollow balls (12)
5133A	**Spacer, pushrod (aluminum, blue) (use with 5318 or 5318X pushrod and 5358 progressive 2 rockers) (8)**
5133	**Spacer, pushrod (aluminum, red) (use with 5318 or 5318X pushrod and 5358 progressive 2 rockers) (8)**
5332	Suspension arm upper (1)/ suspension arm lower (1) (left front)
5331	Suspension arms upper (1)/ suspension arm lower (1) (right front)
5321	Suspension pin set (front or rear, hardened steel), 3x20mm (4), 3x40mm (2))
5338	Toe link, 5.0mm steel (front or rear) (2)
5338A	**Toe links, Revo® (TUBES 7075-T6 aluminum, black) (128mm, fits front or rear) (2)/ rod ends, rear (4)/ rod ends, front (4)/ wrench (1)**
5338R	**Toe links, Revo® (TUBES red-anodized, 7075-T6 aluminum, stronger than titanium) (128mm, fits front or rear) (2)/ rod ends, rear (4)/ rod ends, front (4)/ aluminum wrench (1)**

Hardware

1552	Backplate screws (3x8mm cap-head machine) (6)/washers (6)/ wrench
1834	**Body clips (12) (standard size)**
3934	Body clips, heavy duty (12)
3182	Collars, screw (2)/ set screws, 3mm (2)
5150	E-clips, 1.5mm (24)
5477	Flat wrench, 5mm (blue-anodized aluminum)
5478	**Flat wrench, 8mm (blue-anodized aluminum)**
3980	Glow plug wrench (universal wrench)
2586	Head screws, 3x15mm cap-head machine (hex drive) (6) (TRX 2.5)
5476X	Hex wrenches; 1.5mm, 2mm, 2.5mm, 3mm, 2.5mm ball
5475	Multi-tool (plastic)
5158	Nuts, 2.5mm nylon locking (12)
2745	Nuts, 3mm nylon locking (12)
3982	PTFE-coated 6x8x0.5 (10)
5145	Screw pin, 4x15mm (6)
3236	Screws, 2.5x12mm cap-head machine (6)
3215	Screws, 2.5x6mm cap-head machine (hex drive) (6)
3965	Screws, 2.5x8mm cap-head machine (6)
5169	Screws, 2.6x8mm countersunk machine (6)
2674	Screws, 2x6mm roundhead self-tapping (6)
2577	Screws, 3x10mm button-head machine (hex drive) (6)
2587	Screws, 3x10mm cap-head machine (6) (no washer)
3159	Screws, 3x10mm cap-head machine (hex drive) (6)/ lock washers (6)/ hex wrench
2551	Screws, 3x10mm countersunk machine (6) (hex drive)
5282	Screws, 3x12mm button-head machine (6) (starter attachment screws with threadlock)
2578	Screws, 3x12mm button-head machine (hex drive) (6)
2552	Screws, 3x12mm countersunk machine (6) (hex drive)
2579	Screws, 3x15mm button-head machine (hex drive) (6)
5142	Screws, 3x15mm cap-head machine (hex drive) (with split and flat washers) (6)
2553	Screws, 3x15mm countersunk machine (6) (hex drive)
2580	Screws, 3x20mm button-head machine (hex drive) (6)
4978	Screws, 3x21mm button-head machine (hex drive) (partially threaded, Revo brake bolts) (6)
2581	Screws, 3x25mm button-head machine (hex drive) (6)
3963	Screws, 3x28mm cap-head machine (hex drive) (6)/ 3x6mm ELW (6)
2582	Screws, 3x30mm button-head machine (hex drive) (6)
3964	Screws, 3x32mm cap-head machine (hex drive) (6)
2575	Screws, 3x6mm button-head machine (hex drive) (6)
2554	Screws, 3x6mm cap-head machine (hex drive) (6)
3932	Screws, 3x6mm flat-head machine (hex drive) (6)
2576	Screws, 3x8mm button-head machine (hex drive) (6)
3931	Screws, 3x8mm flat-head machine (hex drive) (6)
3936	Screws, 4x10mm button-head machine (hex drive) (6)
3937	Screws, 4x12mm button-head machine (hex drive) (6)
3938	Screws, 4x14mm button-head machine (hex drive) (6)
3933	Screws, 4x16mm button-head machine (hex drive) (6)
3940	Screws, 4x4mm button-head machine, aluminum (blue) (hex drive) (6)
3939	Screws, 4x6mm button-head machine (hex drive) (with threadlock) (6)
4897	Screws, set (grub) 4mm (6) (with threadlock)
2743	Set (grub) screws, 3mm hardened (12)
3966	Shoulder screws, 3x10mm (6) (with threadlock)
5133A	Spacer, pushrod (aluminum, blue) (use with 5318 or 5318X pushrod and 5358 progressive 2 rockers) (8)
5133	**Spacer, pushrod (aluminum, red) (use with 5318 or 5318X pushrod and 5358 progressive 2 rockers) (8)**

LED Lights

5684	**LED light bar (chrome) (fits Summit roll cage)/ light harness (4 clear lights)/ harness adapter**
5687	LED lights, center harness, Summit (1)/ wire clip (1)
5689	LED lights, front harness (4 clear lights), Summit
5688	LED lights, rear harness (6 red lights), Summit (1)/ wire clip (1)

Motors & Electronics

3019R	EVX-2 Electronic Speed Control (land version, low-voltage detection, fwd/rev)
2064	Gear set (for 2065 waterproof sub-micro servo)
2064X	**Gear set, metal (for 2065X waterproof sub-micro servo)**
2252	**Gear set, metal (for 2250, 2255 servos)**
5661	Motor mount hinge post/ 4x12mm BCS (1)/ 4x10mm CS with split and flat washer (1)
5660	Motor mount, finned aluminum
5675	Motor, Titan® 775 (10-turn/16.8 volts) (1)
2254	**Servo case, aluminum (blue-anodized) (middle) (for 2250 servo)**
2253	**Servo case, aluminum (red-anodized) (middle) (for 2255 servo)**
2251	**Servo case, plastic (top, middle, bottom)/ gaskets/ hardware (for 2250, 2255 servos)**
2074	Servo case/gaskets (for 2056 and 2075 waterproof servos)
2063	Servo case/gaskets (for 2065 waterproof sub-micro servo)
2063X	**Servo case/gaskets (for 2065X metal gear, waterproof, sub-micro servo)**
2075R	**Servo, digital high-speed, metal gear (ball bearing), waterproof**
2075	Servo, digital high-torque (ball bearing), waterproof
2250	**Servo, digital high-torque 330 coreless, metal gear (ball bearing), waterproof**
2255	**Servo, digital high-torque 400 brushless, metal gear (ball bearing), waterproof**
2075X	**Servo, digital high-torque, metal gear (ball bearing), waterproof**
2065	Servo, sub-micro, waterproof
2065X	**Servo, sub-micro, waterproof, metal gear**
5696	Y-harness, servo and LED lights (for Summit with TQ 2.4GHz radio system)

Radio System, Batteries & Chargers

2842X	**5000mAh 7.4v 2-Cell 25C LiPo Battery**
2843X	**5800mAh 7.4v 2-Cell 25C LiPo Battery**
2869X	**7600mAh 7.4v 2-Cell 25C LiPo Battery**
2976	**AC to DC converter, 40W**
2938X	**Adapter, Traxxas® iD® LiPo battery (adapts Traxxas iD batteries to separate balance ports)**
5526	Antenna crimp nut, aluminum (blue-anodized)/ antenna nut tools
5526R	**Antenna crimp nut, aluminum (red-anodized)/ antenna nut tools**
1726	Antenna, tube (1)/ vinyl antenna cap (1)/ wire retainer (1)
2943	**Battery charge indicators (green (4), blue (4), grey (4))**
6548	Battery door, transmitter (replacement for #6516, 6517, 6528, 6529, 6530 transmitters)
2914	**Battery, Power Cell AA Alkaline (4)**
2923X	**Battery, Power Cell, 3000mAh (NiMH, 7-C flat, 8.4V)**
2940X	**Battery, Series 3 Power Cell, 3300mAh (NiMH, 7-C flat, 8.4V)**
2950X	**Battery, Series 4 Power Cell, 4200mAh (NiMH, 7-C flat, 8.4V)**
2960X	**Battery, Series 5 Power Cell, 5000mAh (NiMH, 7-C flat, 8.4V)**
2991	**Battery/charger completer pack (includes #2972 Dual iD® charger (1), #2869X 7600mAh 7.4V 2-cell 25C LiPo battery (2))**
2734	Cable ties (small) (10)
2975	**Charger, DC, 4 amp (6 - 7 cell, 7.2 - 8.4 volt, NiMH)**
2972	**Charger, EZ-Peak® Dual, 100W, NiMH/LiPo with iD® Auto Battery Identification**
2973	**Charger, EZ-Peak® Live Dual, 200W, NiMH/LiPo with iD® Auto Battery Identification**
2971	**Charger, EZ-Peak® Live, 100W, NiMH/LiPo with iD® Auto Battery Identification**
2970	**Charger, EZ-Peak® Plus, 4 amp, NiMH/LiPo with iD® Auto Battery Identification**
5632	**Chassis brace, rear (fits E-Revo®/Summit)**
6525	**Communication link, telemetry expander**
6541	**Connector, power tap (with cable) (long)/ wire tie**
6512	Cover plate, Traxxas Link™ Wireless Module
3019R	EVX-2 Electronic Speed Control (land version, low-voltage detection, fwd/rev)
2978	**Fuse, charger, 5A (2) (for #2974, 2975, 2977)**
2064	Gear set (for 2065 waterproof sub-micro servo)
2064X	**Gear set, metal (for 2065X waterproof sub-micro servo)**
2252	**Gear set, metal (for 2250, 2255 servos)**
2968X	**LiPo cell voltage checker/balancer (includes #2938X adapter for Traxxas® iD® batteries)**

2968	**LiPo cell voltage checker/balancer (requires #2938X adapter for Traxxas® iD® batteries)**
6556	**Mount, telemetry expander (fits XO-1®, E-Revo®*, Summit*, all T-Maxx®/E-Maxx® trucks, Revo® 3.3, Slayer Pro 4X4) (*requires rear chassis brace #5632)**
6535	**Mount, temperature sensor (electric motors)/ wire tie/ thermal pad**
6533	Receiver, micro, TQi 2.4GHz with telemetry & TSM (5-channel)
6552	**Seal kit, expander box (includes o-ring, seals, and silicone grease)**
6526	**Sensor, auto-detectable, temperature**
6527	**Sensor, auto-detectable, voltage**
6522	**Sensor, RPM (short)/ 3x4mm BCS (2)**
6521	**Sensor, temperature and voltage (long)**
2254	**Servo case, aluminum (blue-anodized) (middle) (for 2250 servo)**
2253	**Servo case, aluminum (red-anodized) (middle) (for 2255 servo)**
2251	**Servo case, plastic (top, middle, bottom)/ gaskets/ hardware (for 2250, 2255 servos)**
2074	Servo case/gaskets (for 2056 and 2075 waterproof servos)
2063	Servo case/gaskets (for 2065 waterproof sub-micro servo)
2063X	**Servo case/gaskets (for 2065X metal gear, waterproof, sub-micro servo)**
2075R	**Servo, digital high-speed, metal gear (ball bearing), waterproof**
2075	Servo, digital high-torque (ball bearing), waterproof
2250	**Servo, digital high-torque 330 coreless, metal gear (ball bearing), waterproof**
2255	**Servo, digital high-torque 400 brushless, metal gear (ball bearing), waterproof**
2075X	**Servo, digital high-torque, metal gear (ball bearing), waterproof**
2065	Servo, sub-micro, waterproof
2065X	**Servo, sub-micro, waterproof, metal gear**
6553X	**Telemetry expander 2.0 and GPS module 2.0, TQi radio system**
6550X	**Telemetry expander 2.0, TQi radio system (for use only with #6551X GPS module)**
6551X	**Telemetry GPS module 2.0, TQi radio system (for use only with #6550X telemetry expander)**
6538	**Telemetry trigger magnet holders, spur gear/ magnet, 5x2mm (1)/ 3x8mm CCS (3)/ 3x10mm CCS (3)**
6540	**Telemetry trigger magnet, 5X2mm (1)**
6530	Transmitter, TQi Traxxas Link™ enabled, 2.4GHz high output, 4-channel (transmitter only)
6511	**Traxxas Link™ Wireless Module**

Ready-To-Race Model

56076-4	Summit: 1/10 Scale 4WD Electric Extreme Terrain Monster Truck with TQi Traxxas Link™ Enabled 2.4GHz Radio System

Rear Suspension

5334R	Axle carriers, left & right (1 each) (use with larger 6x13mm ball bearings)/ bearing adapters (for 6x12mm ball bearings) (2)/ dust boot retainers (4)
5323	Bulkhead tie bars, front & rear (blue-anodized aluminum)
5323R	**Bulkhead tie bars, front & rear (red-anodized aluminum)**
5631	Bulkhead, rear (left & right halves)
5134	Caster spacers (4)/ shims (4)
5339	**Insert, threaded steel (replacement inserts for TUBES) (includes (1) left and (1) right threaded insert)**
5378X	Pivot ball caps (4)/ dust boots, rubber (4)/ dust plugs, rubber (4)/ dust boot retainers, black (4), blue (4) (2 pkgs. req. to complete truck)
4933	Pivot balls (4)/ pivot ball cap bushings (4)
4933X	**Pivot balls, hard-anodized 7075-T6 aluminum (4)/ pivot ball cap bushings (4)**
5319X	**Push rod (aluminum) (assembled with rod ends) (2) (red) (use with #5359 progressive 3 rockers)**
5318X	**Push rod (aluminum) (assembled with rod ends) (2) (use with long travel or #5357 progressive-1 rockers)**
5319	**Push rod (steel) (assembled with rod ends) (2) (black) (use with #5359 progressive 3 rockers)**
5318	Push rod (steel) (assembled with rod ends) (2) (use with long travel or #5357 progressive-1 rockers)
5354	Rocker arm post (steel) (2)
5356	Rocker arm set, long travel (120-T) (use with #5318 or #5318X pushrod)
5357	**Rocker arm set, progressive-1 (90-T) (use with #5318 or #5318X pushrod)**
5358	**Rocker arm set, progressive-2 (90-T)/ spacers (red aluminum) (8)**
5359	**Rocker arm set, progressive-3 (90-T) (requires pushrods part #5319 or 5319X)**
5348	Rod ends, Revo® (large, for rear toe link only) (4)
5133A	**Spacer, pushrod (aluminum, blue) (use with 5318 or 5318X pushrod and 5358 progressive 2 rockers) (8)**
5133	**Spacer, pushrod (aluminum, red) (use with 5318 or 5318X pushrod and 5358 progressive 2 rockers) (8)**
5333R	Suspension arm set, adjustable wheelbase (lengthens wheelbase 10mm or 19mm) (suspension arm upper (2)/ suspension arm lower (2)/ bumper mount spacers (2)/ 4x16BCS (2))
5328	Suspension arms, adjustable wheelbase left side (upper arm (1)/ lower arm (1))
5327	Suspension arms, adjustable wheelbase right side (upper arm (1)/ lower arm (1))
5321	Suspension pin set (front or rear, hardened steel), 3x20mm (4), 3x40mm (2))
5338A	**Toe links, Revo® (TUBES 7075-T6 aluminum, black) (128mm, fits front or rear) (2)/ rod ends, rear (4)/ rod ends, front (4)/ wrench (1)**
5338R	**Toe links, Revo® (TUBES red-anodized, 7075-T6 aluminum, stronger than titanium) (128mm, fits front or rear) (2)/ rod ends, rear (4)/ rod ends, front (4)/ aluminum wrench (1)**

Shocks (GTR)

5466X	Body, GTR shock (hard-anodized, PTFE-coated aluminum) (1)
5465	Caps and spring retainers, GTR shock (upper cap (2)/ hollow balls (2)/ bottom cap (2)/ upper retainer (2)/ lower retainer (2))
5475	Multi-tool (plastic)
5158	Nuts, 2.5mm nylon locking (12)
5462	Rebuild kit, GTR shock (x-rings, bump stops, bladders, all pistons, piston nuts, shock rod ends) renews 2 shocks
5469	Rod ends (GTR shocks) (6)
5463T	Shaft, GTR shock, TiN-coated (2)
5460X	Shocks, GTR hard-anodized, PTFE-coated aluminum bodies with TiN shafts (fully assembled w/o springs) (4)
1666	Silicone shock oil (30 wt)
5461	**Variable damping kit, GTR shocks (includes #1, #2, #3 pistons and stainless steel valves)**

Slipper Clutch Components

5478	Flat wrench, 8mm (blue-anodized aluminum)
3992	Input shaft/ drive gear assembly (18-tooth steel top gear)
5352R	**Rebuild kit (heavy duty), slipper clutch (steel disc/ aluminum friction pads (3)/ spring (1)/ 2x9.8mm pin/ 5x8mm MW/ 5.0mm NL (1)/ 4.0mm NL (1))**
5352X	Rebuild kit, slipper clutch (steel disc/ friction pads (3)/ spring (2)/ 2x9.8mm pin/ 5x8mm MW/ 5.0mm NL (1)/ 4.0mm NL (1))
2554	Screws, 3x6mm cap-head machine (hex drive) (6)
5351	Slipper pressure plate and hub (alloy)

Springs

5435	**Spring, shock (red) (GTR) (2.6 rate yellow) (1 pair)**
5436	**Spring, shock (red) (GTR) (2.9 rate white) (1 pair)**
5437	**Spring, shock (red) (GTR) (3.2 rate orange) (1 pair)**
5438	**Spring, shock (red) (GTR) (3.5 rate green) (1 pair)**
5439	**Spring, shock (red) (GTR) (3.8 rate gold) (1 pair)**
5440	**Spring, shock (red) (GTR) (4.1 rate tan) (1 pair)**
5441	**Spring, shock (red) (GTR) (4.4 rate black) (1 pair)**
5444	**Spring, shock (red) (GTR) (5.9 rate blue) (1 pair)**
5445	**Spring, shock (red) (GTR) (6.4 rate purple) (1 pair)**
5648	Spring, shock (red) (long) (GTR) (4.9 rate double yellow stripe) (1 pair)
5649	Spring, shock (red) (long) (GTR) (5.4 rate double orange stripe) (1 pair)

Spur Gears & Pinion Gears

5640	Gear, 14-T pinion (0.8 metric pitch, compatible with 32-pitch) (fits 5mm shaft)/ set screw
5643	**Gear, 17-T pinion (0.8 metric pitch, compatible with 32-pitch) (fits 5mm shaft)/ set screw**
5644	**Gear, 18-T pinion (0.8 metric pitch, compatible with 32-pitch) (hardened steel) (fits 5mm shaft)/ set screw**
5646	**Gear, 20-T pinion (0.8 metric pitch, compatible with 32-pitch) (fits 5mm shaft)/ set screw**
2554	Screws, 3x6mm cap-head machine (hex drive) (6)
4897	Screws, set (grub) 4mm (6) (with threadlock)
3956	**Spur gear, 54-tooth (0.8 metric pitch, compatible with 32-pitch)**
3957	**Spur gear, 56-tooth (0.8 metric pitch, compatible with 32-pitch)**
3958	**Spur gear, 58-tooth (0.8 metric pitch, compatible with 32-pitch)**
3959	**Spur gear, 62-tooth (0.8 metric pitch, compatible with 32-pitch)**
3960	**Spur gear, 65-tooth (0.8 metric pitch, compatible with 32-pitch)**
3961	Spur gear, 68-tooth (0.8 metric pitch, compatible with 32-pitch)

Steering Components

5355X	**Hollow ball set, aluminum (30)/ tall centered hollow ball (2)/ tall offset hollow ball (2)/ bump steer adjustment shims; 3.5mm (2), 1.17mm (2)**
5355	Hollow ball, tall centered (2)/ tall offset hollow ball (2)/ bump steer adjustment shims; 3.5mm (2), 1.17mm (2)
5343X	Mount, steering arm/ steering stops (2) (lower hinge pin retainer) (includes standard and maximum throw steering stops)
5469	Rod ends (GTR shocks) (6)

REV. 201002 1228

SUMMIT® (56076-4)

5347 Rod ends, Revo® (large) with hollow balls (12)
5345X Servo horns, steering and throttle (for non-Traxxas® servos (Hitec, JR, KO, Airtronics))
5345R Servo horns, steering, long (2), short (2)/ linkage, steering (3x20mm turnbuckle) (2)/ rod ends (short) (4)/ hollow balls (4)
5344X Servo saver spring, heavy duty (for use with metal-gear servos)
2075R Servo, digital high-speed, metal gear (ball bearing), waterproof
2075 Servo, digital high-torque (ball bearing), waterproof
2075X Servo, digital high-torque, metal gear (ball bearing), waterproof
5344 Steering arm (upper & lower)/ servo saver/ servo saver spring/ steering arm shaft
5338 Toe link, 5.0mm steel (front or rear) (2)

Suspension Linkage

5355X Hollow ball set, aluminum (30)/ tall centered hollow ball (2)/ tall offset hollow ball (2)/ bump steer adjustment shims; 3.5mm (2), 1.17mm (2)
5355 Hollow ball, tall centered (2)/ tall offset hollow ball (2)/ bump steer adjustment shims; 3.5mm (2), 1.17mm (2)
5339 Insert, threaded steel (replacement inserts for TUBES) (includes (1) left and (1) right threaded insert)
5319X Push rod (aluminum) (assembled with rod ends) (2) (red) (use with #5359 progressive 3 rockers)
5318X Push rod (aluminum) (assembled with rod ends) (2) (use with long travel or #5357 progressive-1 rockers)
5319 Push rod (steel) (assembled with rod ends) (2) (black) (use with #5359 progressive 3 rockers)
5318 Push rod (steel) (assembled with rod ends) (2) (use with long travel or #5357 progressive-1 rockers)
5469 Rod ends (GTR shocks) (6)
5347 Rod ends, Revo® (large) with hollow balls (12)
5348 Rod ends, Revo® (large, for rear toe link only) (4)
5345R Servo horns, steering, long (2), short (2)/ linkage, steering (3x20mm turnbuckle) (2)/ rod ends (short) (4)/ hollow balls (4)
5321 Suspension pin set (front or rear, hardened steel), 3x20mm (4), 3x40mm (2))
5338 Toe link, 5.0mm steel (front or rear) (2)
5338A Toe links, Revo® (TUBES 7075-T6 aluminum, black) (128mm, fits front or rear) (2)/ rod ends, rear (4)/ rod ends, front (4)/ wrench (1)
5338R Toe links, Revo® (TUBES red-anodized, 7075-T6 aluminum, stronger than titanium) (128mm, fits front or rear) (2)/ rod ends, rear (4)/ rod ends, front (4)/ aluminum wrench (1)

Team Traxxas Items

2514 Decal sheet, racing sponsors
6160X DVD, Maxx® Power! Full Throttle Action (sleeve)
9950 Official Team Traxxas® racing decal set (flag logo/ 6-color)
9909 Traxxas® racing banner, red & black (3x7 feet)

Tires & Wheels

4147X Nuts, 5mm flanged nylon locking (aluminum, blue-anodized) (4)
5147X Nuts, 5mm flanged nylon locking (steel, serrated) (8)
4955 Pins, axle (2.5x12mm) (4)
5666 Sidewall protector, beadlock style (blue) (2)/ 2.5x8mm CS (24) (for use with Geode wheels)
5664 Sidewall protector, beadlock style (green) (2)/ 2.5x8mm CS (24) (for use with Geode wheels)
5667 Sidewall protector, beadlock style (red) (2)/ 2.5x8mm CS (24) (for use with Geode wheels)
5665 Sidewall protector, beadlock style (yellow) (2)/ 2.5x8mm CS (24) (for use with Geode wheels)
5374A Tires & wheels, assembled, glued (Gemini black chrome wheels, Talon tires, foam inserts) (2)
5374X Tires & wheels, assembled, glued (Gemini black chrome wheels, Talon tires, foam inserts) (2) (use with 17mm splined wheel hubs & nuts, part #5353X) (TSM rated)
5374 Tires & wheels, assembled, glued (Gemini chrome wheels, Talon tires, foam inserts) (2) (fits Revo®/T-Maxx®/E-Maxx with 6mm axle and 14mm hex)
5673 Tires & wheels, assembled, glued (Geode chrome wheels, Canyon AT tires, foam inserts) (2) (use with 17mm splined wheel hubs & nuts, part #5353X & beadlock-style sidewall protectors, part #5665, 5666, 5667)
5674 Tires & wheels, assembled, glued (Geode chrome wheels, Maxx® tires (6.3" outer diameter), foam inserts) (2) (use with 17mm splined wheel hubs & nuts, part #5353X & beadlock-style sidewall protectors, part #5665, 5666, 5667)
4973R Tires & wheels, assembled, glued (Hurricane chrome wheels, Maxx® tires (6.3" outer diameter), foam inserts) (2) (fits Revo®/T-Maxx®/E-Maxx with 6mm axle and 14mm hex)
5174A Tires & wheels, assembled, glued (Split-Spoke satin-finish wheels, Talon tires, foam inserts) (2) (fits Revo®/T-Maxx®/E-Maxx with 6mm axle and 14mm hex)
4983A Tires & wheels, assembled, glued (SS (Split Spoke) black chrome wheels, Maxx® tires (6.3" outer diameter), foam inserts) (2) (use with 17mm splined wheel hubs & nuts, part #5353X) (fits Revo®/T-Maxx®/E-Maxx) (TSM rated)
5174 Tires & wheels, assembled, glued (SS (Split Spoke) chrome wheels, Talon tires, foam inserts) (2) (fits Revo®/T-Maxx®/E-Maxx with 6mm axle and 14mm hex)
5174R Tires & wheels, assembled, glued (SS (Split Spoke) chrome wheels, Talon tires, foam inserts) (2) (use w/17mm splined wheel hubs & nuts, part #5353X)
5375R Tires & wheels, assembled, glued (white dished 3.8" wheels, Response Pro tires, foam inserts) (2) (use with 17mm splined wheel hubs and wheel nuts, part #5353X)
5670 Tires, Canyon AT 3.8" (2)/ foam inserts (2)
4973 Tires, Maxx® 3.8" (6.3" outer diameter (160mm)) (2) (fits Revo®/T-Maxx®/E-Maxx)
5171 Tires, Maxx® Chevron 3.8" (2) (fits Revo®/T-Maxx®/E-Maxx)
5375 Tires, Response Pro 3.8" (soft-compound, narrow profile, short knobby design)/ foam inserts (2)
5471 Tires, Response racing 3.8" (soft-compound, narrow profile, short knobby design)/ foam inserts (2)
5470 Tires, SportTraxx racing 3.8" (soft compound, directional and asymmetrical tread design)/ foam inserts (2)
5370 Tires, Talon 3.8" (2)/ foam inserts (2)
4954R Wheel hubs, hex (steel)
4954X Wheel hubs, hex, 6061-T6 aluminum (blue) (4)/ axle pins (2.5x10mm) (4)
5353X Wheel hubs, splined, 17mm (blue-anodized) (4)/ wheel nuts, splined, 17mm (blue-anodized) (4)/ screw pins, 4x13mm (with threadlock) (4)
5353G Wheel hubs, splined, 17mm (green-anodized) (4)/ wheel nuts, splined, 17mm (blue-anodized) (4)/ screw pins, 4x13mm (with threadlock) (4)
5353R Wheel hubs, splined, 17mm (red-anodized) (4)/ wheel nuts, splined, 17mm (red-anodized) (4)/ screw pins, 4x13mm (with threadlock) (4)
5353 Wheel nuts, splined, 17mm (blue-anodized) (4)
5353A Wheel nuts, splined, 17mm (green-anodized) (4)
5371 Wheels, dished 3.8" (white) (2) (use with 17mm splined wheel hubs and wheel nuts, part #5353X)
5372A Wheels, Gemini 3.8" (black chrome) (2)
5372X Wheels, Gemini 3.8" (black chrome) (2) (use with 17mm splined wheel hubs & nuts, part #5353X)
5372 Wheels, Gemini 3.8" (chrome) (2) (fits Revo®/T-Maxx®/E-Maxx with 6mm axle and 14mm hex)
5671 Wheels, Geode 3.8" (chrome) (2) (use with 17mm splined wheel hubs & nuts, part #5353X & beadlock-style sidewall protectors, part #5665, 5666, 5667)
5373 Wheels, Hurricane 3.8" (chrome) (2) (fits Revo®/T-Maxx®/E-Maxx with 6mm axle and 14mm hex)
5172A Wheels, SS (split spoke) 3.8" (black chrome) (2) (use with 17mm splined wheel hubs & nuts, part #5353X) (fits Revo®/T-Maxx®/E-Maxx)
5172X Wheels, SS (Split-Spoke) 3.8" (chrome) (2) (fits Revo®/T-Maxx®/E-Maxx with 6mm axle and 14mm hex)
5172R Wheels, SS (Split-Spoke) 3.8" (chrome) (2) (use with 17mm splined wheel hubs & nuts, part #5353X) (fits Revo®/T-Maxx®/E-Maxx)
5172 Wheels, SS (Split-Spoke) 3.8" (satin) (2) (fits Revo®/T-Maxx®/E-Maxx with 6mm axle and 14mm hex)

Transmission Components

4614 Ball bearings (6x12x4mm) (2)
5157 Cover plates and seals, forward only conversion (Revo®) (Optidrive® blank-out plate, Optidrive® sensor cover, shift fork cover)
5677A Cover, gear/ 3x8mm CS (1)
5677R Cover, gear/ 3x8mm CS (1) (for single motor installation, use with motor plate #5690X)
3973 Gear set, close ratio (1st speed gear 21T, 18T input gear)
3974 Gear set, wide ratio (1st speed gear 26T, 13T input gear)
3991X Gearbox halves (front & rear)/ shift detent ball/ spring/ 4mm GS/ shift shaft seal, glued/ 2.5x8mm CS (2)
3976 Idler gear, 13T (1st speed gear)
3996X Idler gear, 20-tooth/ idler gear shaft
3992 Input shaft/ drive gear assembly (18-tooth steel top gear)
5668 Linkage, shift (includes: ball collar, spring, ball cup, servo horn, linkage wire)/ shift servo mount/ 3x8mm BCS (2)
3984X Output gear, 33-tooth (1)/ spacers (2)
3985X Output gears, 33T (2)/ drive dog carrier/ output shaft spacer
3969 Output shaft, transmission
5690 Plate, motor
5690X Plate, motor (for single motor installation, use with gear cover #5677X)
3965 Screws, 2.5x8mm cap-head machine (6)
2552 Screws, 3x12mm countersunk machine (6) (hex drive)

REV. 201002 1228

5669	Servo horn (with built-in spring and hardware) (for Summit locking differential)
3989X	Shift fork/ shaft
1647	Silicone grease
5692	Two speed conversion kit (E-Revo®) (includes wide and close ratio first gear sets, sub-micro servo, and linkage) (Requires 3 channel transmitter)

Traxxas Tools

3433X	**Body reamer (aluminum handle)**
3433	**Body reamer (plastic handle)**
3436	**Cap, body reamer**
3432	**Scissors, curved tip**
3431	**Scissors, straight tip**
8712	**Speed Bit Essentials Set, hex and nut driver, 7-piece, includes premium handle (medium), travel pouch, hex drivers (straight: 1.5mm, 2.0mm, 2.5mm) and nut drivers (5.0mm, 5.5mm, 7.0mm, and 8.0mm), 1/4" drive**
8721	**Speed bit handle, medium (one piece)**
8720	**Speed bit handle, premium, large (rubber overmold)**
8722	**Speed bit handle, premium, medium (rubber overmold)**
8710	**Speed Bit Master Set, hex and nut driver, 13-piece, includes premium handle (medium), travel pouch, hex drivers (straight: 1.5mm, 2.0mm, 2.5mm, 3.0mm), (ball-end: 2.0mm, 2.5mm, 3.0mm), and nut drivers (4.00mm, 4.50mm, 5.00mm, 5.50mm, 7.00mm, 8.00mm),**
8711	**Speed Bit Master Set, hex driver, 7-piece straight and ball end, includes premium handle (medium), travel pouch, hex drivers (straight: 1.5mm, 2.0mm, 2.5mm, 3.0mm) (ball end: 2.0mm, 2.5mm, 3.0mm), 1/4" drive**
8719	**Speed Bit Master Set, nut driver, 6-piece, includes premium handle (medium), travel pouch, and nut drivers (4.0mm, 4.5mm, 5.0mm, 5.5mm, 7.0mm, 8.0mm), 1/4" drive**
8716	**Speed Bit Set, hex driver, 2-piece ball-end (2.0mm, 2.5mm), 1/4" drive**
8716X	**Speed Bit Set, hex driver, 3-piece ball-end (2.0mm, 2.5mm, 3.0mm), 1/4" drive**
8715	**Speed Bit Set, hex driver, 3-piece straight (1.5mm, 2.0mm, 2.5mm), 1/4" drive**
8715X	**Speed Bit Set, hex driver, 4-piece straight (1.5mm, 2.0mm, 2.5mm, 3.0mm), 1/4" drive**
3415	**Tool set with pouch (includes 1.5mm, 2.0mm, 2.5mm, 3.0mm, 3.5mm, 4mm drivers/ 4mm, 5mm, 5.5mm, 7mm and 8mm nut drivers/ 2mm, 4mm, and 5mm slotted screwdrivers/ #00 Phillips, #0 Phillips, and #1 Phillips screwdrivers/ 4mm and 8mm wrench/ driver handle**

Turnbuckles & Threaded Rods

5477	Flat wrench, 5mm (blue-anodized aluminum)
5339	**Insert, threaded steel (replacement inserts for TUBES) (includes (1) left and (1) right threaded insert)**
5341	Linkage, steering (Revo® 3.3) (3x50mm Turnbuckle) (2)/ rod ends (short) (4)/ hollow balls (4)
5319X	**Push rod (aluminum) (assembled with rod ends) (2) (red) (use with #5359 progressive 3 rockers)**
5318X	**Push rod (aluminum) (assembled with rod ends) (2) (use with long travel or #5357 progressive-1 rockers)**
5319	**Push rod (steel) (assembled with rod ends) (2) (black) (use with #5359 progressive 3 rockers)**
5318	Push rod (steel) (assembled with rod ends) (2) (use with long travel or #5357 progressive-1 rockers)
5338	Toe link, 5.0mm steel (front or rear) (2)
5338A	**Toe links, Revo® (TUBES 7075-T6 aluminum, black) (128mm, fits front or rear) (2)/ rod ends, rear (4)/ rod ends, front (4)/ wrench (1)**
5338R	**Toe links, Revo® (TUBES red-anodized, 7075-T6 aluminum, stronger than titanium) (128mm, fits front or rear) (2)/ rod ends, rear (4)/ rod ends, front (4)/ aluminum wrench (1)**

If you have questions or need technical assistance, call Traxxas at:

1-888-TRAXXAS

(1-888-872-9927) (U.S. residents only)

For orders, calls outside the U.S., and other information, call 972-549-3000, or fax to 972-549-3011 e-mail Traxxas at support@Traxxas.com

TRAXXAS.com

REV. 201002 1228

THE EVOLUTION OF TOUGH

X-MAXX

MODEL 77086-4

4WD ELECTRIC MONSTER TRUCK



50+ mph*

TQi 2.4GHz TRANSMITTER

TRAXXAS 1200XL BIG BLOCK MOTOR AND VXL-8S BRUSHLESS POWER SYSTEM

GTX ALUMINUM SHOCKS

THE BIGGEST, BADDEST SUPER-SIZED ELECTRIC TRUCK

Unrelenting 4X4 power, mammoth size, and award-winning innovation make X-Maxx the ultimate monster truck. With 30+ volts of extreme 8s power, X-Maxx defies physics, unleashing jaw-dropping acceleration and 50+mph speeds with optional 4s LiPo batteries (Sold Separately). Engineered to conquer the most extreme terrain and take brutal realworld punishment in stride, X-Maxx is the definition of Traxxas Tough™.

*Requires 4s LiPo batteries (#2890X, sold separately) and included 46T optional spur gear.

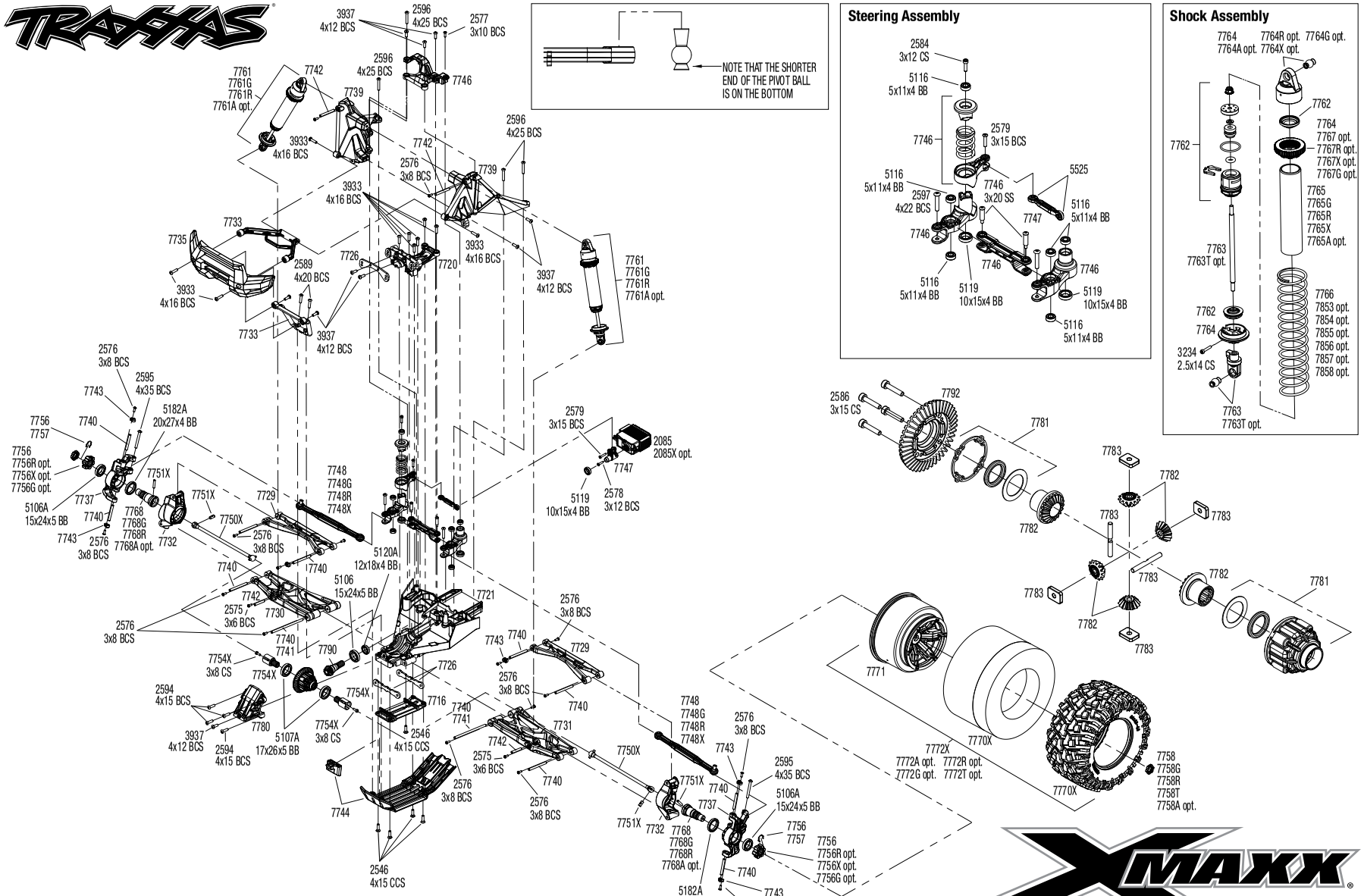

REV 201015-R16
See Parts List for a complete listing of optional accessories.

Specifications on this page are subject to change without notice. Every attempt has been made to ensure the accuracy of this drawing; however, Traxxas cannot be held responsible for typographical or other errors.

Front Assembly

Questions? **Call toll-free, 1-888-TRAXXAS**

X-MAXX (77086-4)

X-MAXX® Chassis Assembly

See Parts List for a complete listing of optional accessories.

REV 201015-R16

Specifications on this page are subject to change without notice. Every attempt has been made to ensure the accuracy of this drawing; however, Traxxas cannot be held responsible for typographical or other errors.

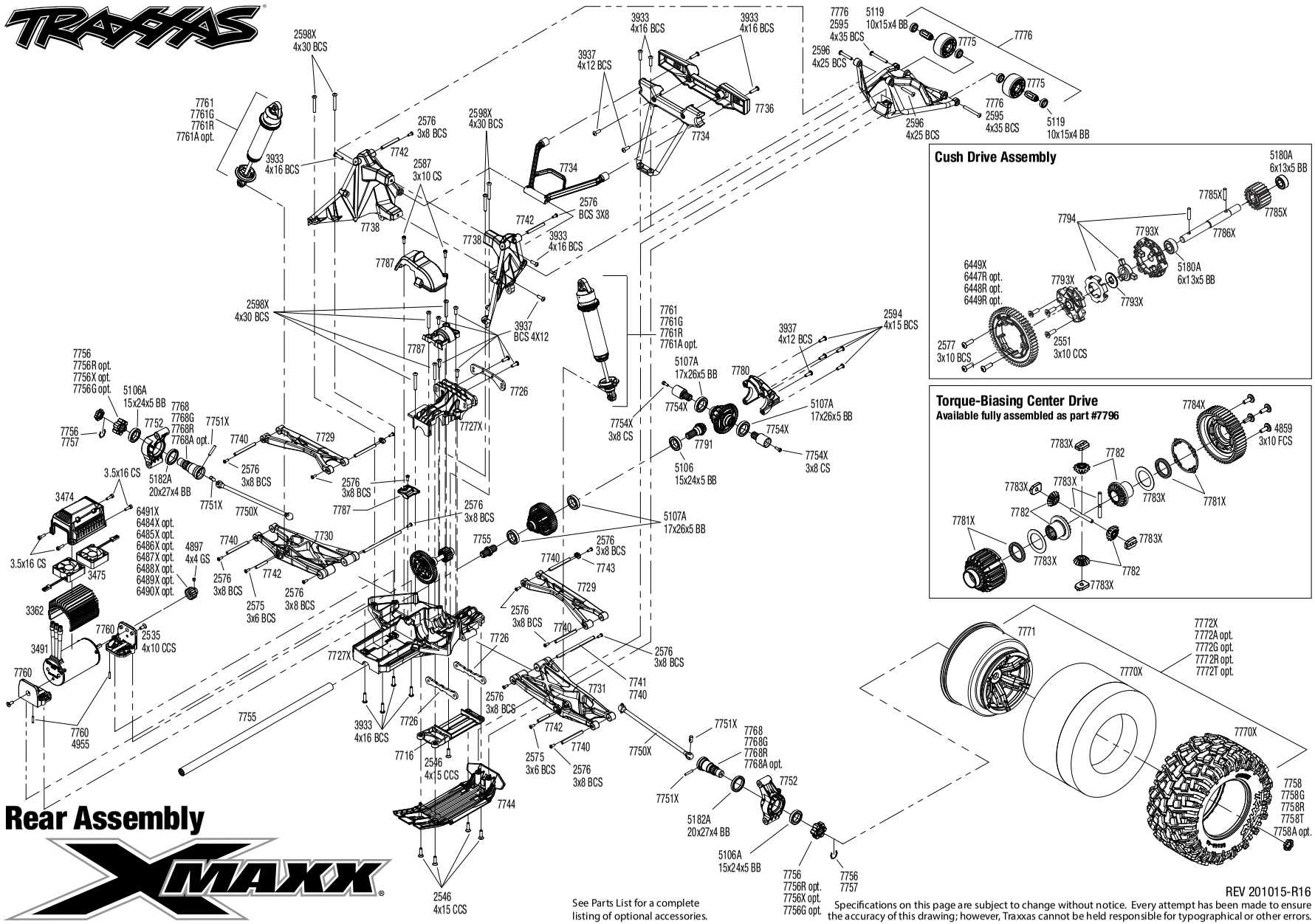

Rear Assembly

XMAXX

See Parts List for a complete listing of optional accessories.

REV 201015-R16

Specifications on this page are subject to change without notice. Every attempt has been made to ensure the accuracy of this drawing; however, Traxxas cannot be held responsible for typographical or other errors.

X-MAXX (77086-4)

Body Assembly

See Parts List for a complete listing of optional accessories.

REV 201015-R16

Specifications on this page are subject to change without notice. Every attempt has been made to ensure the accuracy of this drawing; however, Traxxas cannot be held responsible for typographical or other errors.

Modular Assembly

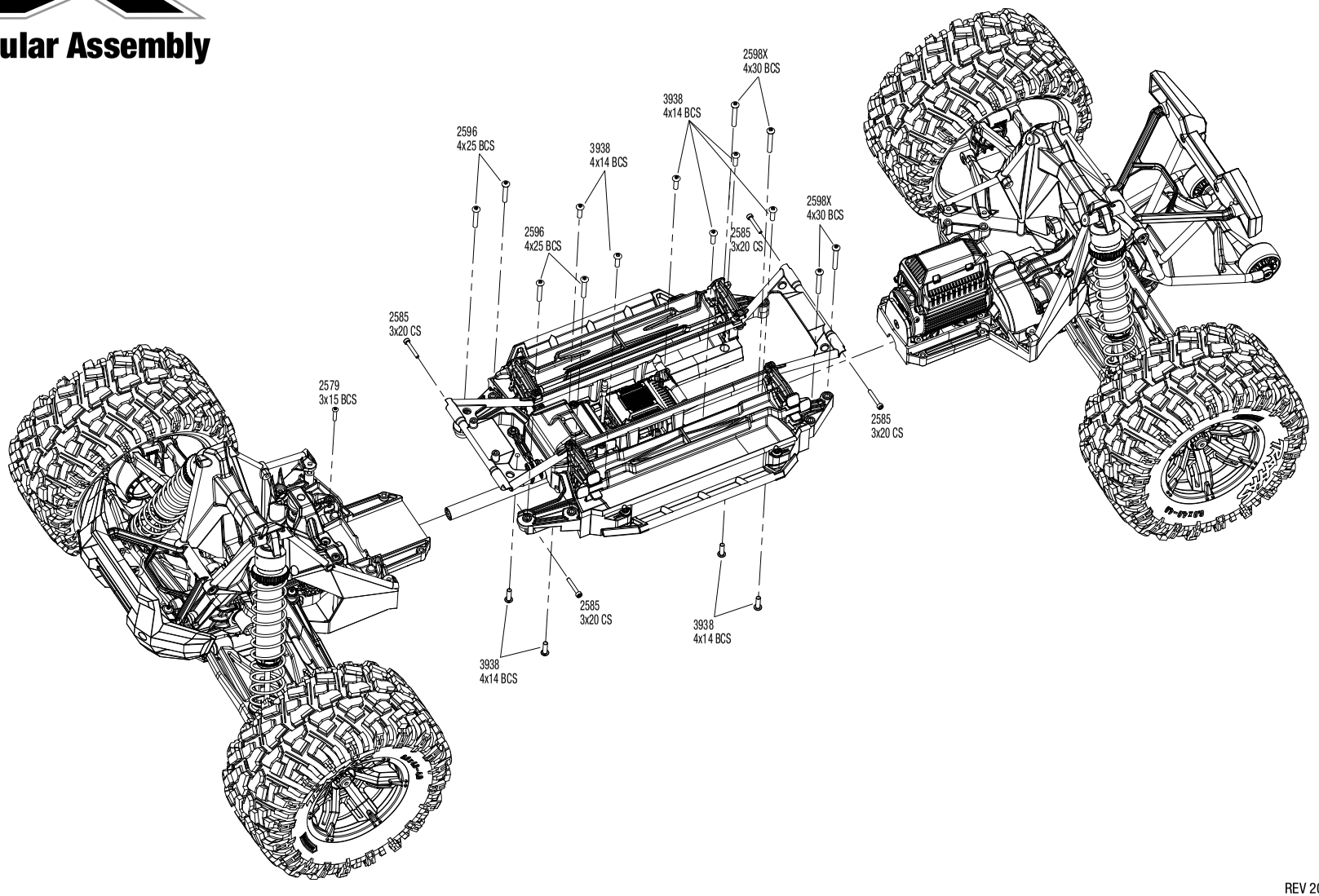

REV 201015-R16

Specifications on this page are subject to change without notice.
Every attempt has been made to ensure the accuracy of this drawing; however, Traxxas cannot be held responsible for typographical or other errors. See Parts List for a complete listing of optional accessories.

X-MAXX (77086-4)

PARTS SHOWN IN BOLD ARE OPTIONAL ACCESSORIES.

Part categories and individual part listings are arranged alphabetically.

Bearings & Bushings

5106A	Ball bearing, black rubber sealed (15x24x5mm) (2)
5108A	Ball bearing, black rubber sealed (15x26x5mm) (2)
5107A	Ball bearing, black rubber sealed (17x26x5mm) (2)
5182A	Ball bearing, black rubber sealed (20x27x4mm) (2)
5106	Ball bearing, blue rubber sealed (15x24x5mm) (2)
4611	Ball bearings (5x11x4mm) (2)
5120A	Ball bearings, black rubber sealed (12x18x4mm) (2)
5180A	Ball bearings, black rubber sealed (6x13x5mm) (2)
5119	Ball bearings, blue rubber sealed (10x15x4mm) (2)
5116	Ball bearings, blue rubber sealed (5x11x4mm) (2)

Body & Accessories

7715	Body mounts, front & rear/3x15mm BCS (1)/ 3x12mm shoulder screw (2)/ 3x10mm flat-head machine screw (6)/ 3x15mm flat-head machine screw (2)
7710	**Body reinforcement set (fits #7711 body)**
7713X	Body support, rear/ 3x15mm CS (2) / 3x15mm flat-head machine (2) (fits X-Maxx®)
7711	**Body, X-Maxx® (clear, trimmed, requires painting)/ window masks/ decal sheet**
7711A	Body, X-Maxx®, blue (painted, decals applied) (assembled with front & rear body mounts, rear body support, and tailgate protector)
7811G	Body, X-Maxx®, green (painted, decals applied) (assembled with front & rear body mounts, rear body support, and tailgate protector)
7811	Body, X-Maxx®, orange (painted, decals applied) (assembled with front & rear body mounts, rear body support, and tailgate protector)
7711X	**Body, X-Maxx®, ProGraphix® (graphics are printed, requires paint & final color application)/ decal sheet**
7811R	Body, X-Maxx®, red (painted, decals applied) (assembled with front & rear body mounts, rear body support, and tailgate protector)
7711T	**Body, X-Maxx®, Rock n' Roll (painted, decals applied) (assembled with tailgate protector)**
7817	**Skid plate, roof (body) (black)/ 3x15mm CS (4) (requires #7713X to mount)**
7817X	**Skid plate, roof (body) (blue)/ 3x15mm CS (4) (requires #7713X to mount)**
7817G	**Skid plate, roof (body) (green)/ 3x15mm CS (4) (requires #7713X to mount)**
7817T	**Skid plate, roof (body) (orange)/ 3x15mm CS (4) (requires #7713X to mount)**
7817R	**Skid plate, roof (body) (red)/ 3x15mm CS (4) (requires #7713X to mount)**
7817A	**Skid plate, roof (body) (white)/ 3x15mm CS (4) (requires #7713X to mount)**
7712	Tailgate protector/ 3x8mm flat-head screw (4)

Bumpers & Skidplates

7733	Bumper mount, front/ bumper support
7734	Bumper mount, rear/ bumper support
7735	Bumper, front
7736	Bumper, rear
7745	Skidplate, center
7744	Skidplate, front (1), rear (1)/ rubber impact cushion (2)

Chassis & Attachments

7719	Battery hold-down (2)/ foam pad (2)
7718	Battery hold-down mounts, left (2)/ right (2)/ 3x18mm CS (4)
7715	Body mounts, front & rear/3x15mm BCS (1)/ 3x12mm shoulder screw (2)/ 3x10mm flat-head machine screw (6)/ 3x15mm flat-head machine screw (2)
7724	Box, receiver (sealed)/ wire cover/ foam pads/ silicone grease/ 3x15 CS (4)
7733	Bumper mount, front/ bumper support
7734	Bumper mount, rear/ bumper support
7735	Bumper, front
7736	Bumper, rear
7722	Chassis
7714X	Chassis top brace
7723	Nerf bars, chassis (2)
7725	Seal kit, receiver box (includes o-ring, seals, and silicone grease)
7745	Skidplate, center
7744	Skidplate, front (1), rear (1)/ rubber impact cushion (2)
7717X	Spacer, battery compartment (2)/ foam blocks (4)/ foam pad (2)
7776	Wheelie bar, black (assembled)
7775	Wheels (2) (for #7776 wheelie bar)

Cush Drive Components

7794	Cush drive key/ pin/ elastomer damper
7793X	Housing, cush drive (front & rear halves)
6447R	**Spur gear, 46-tooth, steel (wide-face, 1.0 metric pitch)**
6448R	**Spur gear, 50-tooth, steel (wide-face, 1.0 metric pitch)**
6449X	Spur gear, 54-tooth, steel (1.0 metric pitch)
6449R	**Spur gear, 54-tooth, steel (wide-face, 1.0 metric pitch)**

Differential Components

7781X	Carrier, differential (aluminum) (requires #7783X spider gear shaft)
7781	Carrier, differential/ x-ring gaskets (2)/ ring gear gasket/ 6x10x0.5 TW
5136X	**Differential oil kit (1 each: 10K, 30K, 50K weights)**
7782	Gear set, differential (output gears (2)/ spider gears (4)/ 16x23.5x.5mm TW (2))
5041	Grease, premium high performance (20cc)
7780	Housing, differential (front/rear)
5040	Oil, differential (20M wt) (standard)
7790	Pinion gear, differential, 11-tooth (front) (heavy duty) (use with #7792 35-tooth differential ring gear)
7791	Pinion gear, differential, 11-tooth (rear) (heavy duty) (use with #7792 35-tooth differential ring gear)
7792	Ring gear, differential, 35-tooth (heavy duty) (use with #7790, #7791 11-tooth differential pinion gears)
7783	Spider gear shaft (2)/ spacers (4)/ 16x23.5x.5mm TW (2)
7783X	Spider gear shaft (2)/ spacers (4)/16x23.5x.5 stainless washer (2) (for #7781X aluminum differential carrier)

Driveline Components

7752	Carriers, stub axle (left & right)
7794	Cush drive key/ pin/ elastomer damper
7754X	Drive cup (1)/ 3x8mm CS (for use only with #7750X driveshaft)
7755	Driveshaft assembly, center, aluminum
7750X	Driveshaft, steel constant-velocity (heavy duty, shaft only, 160mm) (1) (replacing #7750 also requires #7751X, #7754X and #7768, #7768R, or #7768G)
5040	Oil, differential (20M wt) (standard)
7751X	Rebuild kit, steel constant-velocity driveshaft (includes pins for 2 driveshaft assemblies (for use only with #7750X driveshaft)
7768A	**Stub axle, aluminum (black-anodized) (1) (for use only with #7750X driveshaft)**
7768	Stub axle, aluminum (blue-anodized) (1) (for use only with #7750X driveshaft)
7768G	Stub axle, aluminum (green-anodized) (1) (for use only with #7750X driveshaft)
7768R	Stub axle, aluminum (red-anodized) (1) (for use only with #7750X driveshaft)
7758A	**Wheel nuts, splined, 17mm, serrated (black-anodized) (4)**
7758	Wheel nuts, splined, 17mm, serrated (blue-anodized) (4)
7758G	Wheel nuts, splined, 17mm, serrated (green-anodized) (4)
7758T	Wheel nuts, splined, 17mm, serrated (orange-anodized) (4)
7758R	Wheel nuts, splined, 17mm, serrated (red-anodized) (4)

Front Suspension & Steering

7726	Bulkhead tie bar, upper (1)/ lower (2) (steel)
7721	Bulkhead, front (lower)
7720	Bulkhead, front (upper)
7752	Carriers, stub axle (left & right)
7732	Caster blocks (c-hubs), left & right
7716	Mount, tie bar, front (1)/ rear (1)
7747	Servo horn, steering/ linkage, steering (46mm, assembled with pivot balls)
7739	Shock tower, front (left & right halves)
7746	Steering bellcranks/ bellcrank support/servo saver/ servo saver spring/ draglink/ 3x20mm shoulder screws (2)
7737	Steering blocks, left & right
7746X	**Steering link, steel/ servo saver spring, heavy duty (use with #2085X metal gear servo)**
7831	**Suspension arm, black, lower (left, front or rear), heavy duty (1)**
7830	**Suspension arm, black, lower (right, front or rear), heavy duty (1)**
7829	**Suspension arm, black, upper (left or right, front or rear), heavy duty (2)**
7831X	**Suspension arm, blue, lower (left, front or rear), heavy duty (1)**
7830X	**Suspension arm, blue, lower (right, front or rear), heavy duty (1)**
7831G	**Suspension arm, green, lower (left, front or rear), heavy duty (1)**
7830G	**Suspension arm, green, lower (right, front or rear), heavy duty (1)**

7831T **Suspension arm, orange, lower (left, front or rear), heavy duty (1)**
7830T **Suspension arm, orange, lower (right, front or rear), heavy duty (1)**
7831R **Suspension arm, red, lower (left, front or rear), heavy duty (1)**
7830R **Suspension arm, red, lower (right, front or rear), heavy duty (1)**
7831A **Suspension arm, white, lower (left, front or rear), heavy duty (1)**
7830A **Suspension arm, white, lower (right, front or rear), heavy duty (1)**
7829X **Suspension arms, blue, upper (left or right, front or rear), heavy duty (2)**
7829G **Suspension arms, green, upper (left or right, front or rear), heavy duty (2)**
7731 Suspension arms, lower (left, front or rear) (1)
7730 Suspension arms, lower (right, front or rear) (1)
7829T **Suspension arms, orange, upper (left or right, front or rear), heavy duty (2)**
7829R **Suspension arms, red, upper (left or right, front or rear), heavy duty (2)**
7729 Suspension arms, upper (left or right, front or rear) (2)
7829A **Suspension arms, white, upper (left or right, front or rear), heavy duty (2)**
7743 Suspension pin retainer (4)
7740 Suspension pin set, front or rear corner (hardened steel), 4x85mm (1), 4x47mm (3), 4x33mm (2) (qty 4, #7740 required for complete set)
7742 Suspension pin set, shock mount (front or rear, hardened steel), 4x25mm (2), 4x38mm (2)
7741 Suspension pins, 4x85mm (hardened steel) (2)

Hardware

2585 Cylinder head bolts, marine 3x20mm CS (6) (TRX 2.5)
2584 Head screws, 3x12mm cap-head machine (hex drive) (6) (TRX 2.5, 2.5R, 3.3)
2586 Head screws, 3x15mm cap-head machine (hex drive) (6) (TRX 2.5)
4955 Pins, axle (2.5x12mm) (4)
3234 Screws, 2.5x14mm cap-head machine (hex drive) (6)
2577 Screws, 3x10mm button-head machine (hex drive) (6)
2587 Screws, 3x10mm cap-head machine (6) (no washer)
4859 Screws, 3x10mm flat-head machine (hex drive) (4)
2593 Screws, 3x14mm button-head machine (hex drive) (6)
2579 Screws, 3x15mm button-head machine (hex drive) (6)
3646 Screws, 3x15mm flat-head machine (hex drive) (6)
4857 Screws, 3x20mm countersunk machine (hex drive) (6)
2581 Screws, 3x25mm button-head machine (hex drive) (6)
2575 Screws, 3x6mm button-head machine (hex drive) (6)
2576 Screws, 3x8mm button-head machine (hex drive) (6)
2535 Screws, 4x10mm countersunk machine (hex drive) (6)
3937 Screws, 4x12mm button-head machine (hex drive) (6)
3938 Screws, 4x14mm button-head machine (hex drive) (6)
2594 Screws, 4x15mm button-head machine (hex drive) (6)
2546 Screws, 4x15mm countersunk machine (hex drive) (6)
3933 Screws, 4x16mm button-head machine (hex drive) (6)
2597 Screws, 4x22mm button-head machine (hex drive) (6)
2596 Screws, 4x25mm button-head machine (hex drive) (6)
2598X Screws, 4x30mm button-head machine (hex drive) (6)
2595 Screws, 4x35mm button-head machine (hex drive) (6)
2743 Set (grub) screws, 3mm hardened (12)
3642X Shoulder screws, Ultra Shocks (3x12 hex drive) (6)
5480X Wheel wrench, splined, 17mm

LED Lights

7882 **Extension harness, LED lights (high-voltage)**
6590 **High-Voltage Power Amplifier**
7884 **LED light bar, front (high-voltage) (40 white LEDs (double row), 82mm wide) (fits X-Maxx® or Maxx®)**
7883 **LED light bar, rear, red (with white reverse light) (high-voltage) (24 red LEDs, 24 white LEDs, 100mm wide)/ light bar mount (fits X-Maxx® or Maxx®)**
7885 **LED light kit, complete (includes #6590 high-voltage power amplifier)**

Motors & Electronics

7749 **Adapter, standard servo (adapts standard servo to fit in X-Maxx® or Maxx®)**
3475 Cooling fan, Velineon® VXL ESC (fits VXL-6s & VXL-8s)
7787 Covers, gear (3)
3474 Dual cooling fan kit (with shroud), Velineon® 1200XL motor
2087 Gear set (for 2085 servo)
2087X **Gear set, metal (for 2085 & 2085X servos)**
3362 Heat sink, Velineon® 1600XL
7760 Motor mounts (front and rear)/ pins (2)
3491 Motor, Velineon® 1200XL, brushless
2086 Servo case/gaskets (for 2085 & 2085X servos)
2085 Servo, digital high-torque (ball bearing), waterproof (X-Maxx®/Maxx® mount)
2085X **Servo, digital high-torque, metal gear (ball bearing), waterproof/ servo saver spring/ steering link**
3496 Velineon® VXL-8s Electronic Speed Control, waterproof (brushless) (fwd/rev/brake)
7759 **Washers, motor mount, aluminum (blue-anodized) (4)/ 4x18mm BCS (4)**
7759G **Washers, motor mount, aluminum (green-anodized) (4)/ 4x18mm BCS (4)**
7759R **Washers, motor mount, aluminum (red-anodized) (4)/ 4x18mm BCS (4)**

Radio System, Batteries & Chargers

2854X **10000mAh 7.4v 2-Cell 25C LiPo Battery**
2872X **5000mAh 11.1v 3-Cell 25C LiPo Battery**
2889X **5000mAh 14.8v 4-Cell 25C LiPo Battery**
2857X **6400mAh 11.1v 3-Cell 25C LiPo Battery**
2890X **6700mAh 14.8v 4-Cell 25C LiPo Battery**
2938X **Adapter, Traxxas® iD® LiPo battery (adapts Traxxas iD batteries to separate balance ports)**
2943 **Battery charge indicators (green (4), blue (4), grey (4))**
6548 Battery door, transmitter (replacement for #6516, 6517, 6528, 6529, 6530 transmitters)
2914 **Battery, Power Cell AA Alkaline (4)**
2993 **Battery/charger completer pack (includes #2971 iD® charger (1), #2890X 6700mAh 14.8V 4-cell 25C LiPo battery (2))**
2990 **Battery/charger completer pack (includes #2972 Dual iD® charger (1), #2872X 5000mAh 11.1V 3-cell 25C LiPo battery (2))**
2997 **Battery/charger completer pack (includes #2973 Dual iD charger (1), #2890X 6700mAh 14.8V 4-cell 25C LiPo battery (2))**
2972 **Charger, EZ-Peak® Dual, 100W, NiMH/LiPo with iD® Auto Battery Identification**
2973 **Charger, EZ-Peak® Live Dual, 200W, NiMH/LiPo with iD® Auto Battery Identification**
2971 **Charger, EZ-Peak® Live, 100W, NiMH/LiPo with iD® Auto Battery Identification**
2970 **Charger, EZ-Peak® Plus, 4 amp, NiMH/LiPo with iD® Auto Battery Identification**
6525 **Communication link, telemetry expander**
2087 Gear set (for 2085 servo)
2087X **Gear set, metal (for 2085 & 2085X servos)**
2968X **LiPo cell voltage checker/balancer (includes #2938X adapter for Traxxas® iD® batteries)**
2968 **LiPo cell voltage checker/balancer (requires #2938X adapter for Traxxas® iD® batteries)**
6533 Receiver, micro, TQi 2.4GHz with telemetry & TSM (5-channel)
6552 **Seal kit, expander box (includes o-ring, seals, and silicone grease)**
6526 **Sensor, auto-detectable, temperature**
6527 **Sensor, auto-detectable, voltage**
6531 **Sensor, temperature & voltage (fits X-Maxx®)**
6521 **Sensor, temperature and voltage (long)**
2086 Servo case/gaskets (for 2085 & 2085X servos)
2085 Servo, digital high-torque (ball bearing), waterproof (X-Maxx®/Maxx® mount)
2085X **Servo, digital high-torque, metal gear (ball bearing), waterproof/ servo saver spring/ steering link**
6553X **Telemetry expander 2.0 and GPS module 2.0, TQi radio system**
6550X **Telemetry expander 2.0, TQi radio system (for use only with #6551X GPS module)**
6551X **Telemetry GPS module 2.0, TQi radio system (for use only with #6550X telemetry expander)**
6509R TQi 2.4 GHz High Output radio system, 2-channel, Traxxas Link™ enabled, TSM (2-ch transmitter, 5-ch micro receiver)
6507R **TQi 2.4 GHz High Output radio system, 4-channel with Traxxas Link™ Wireless Module, TSM (4-ch transmitter, 5-ch micro receiver)**
6528 Transmitter, TQi Traxxas Link™ enabled, 2.4GHz high output, 2-channel (transmitter only)
6529 **Transmitter, TQi Traxxas Link™ enabled, 2.4GHz high output, 3-channel (transmitter only)**
6530 **Transmitter, TQi Traxxas Link™ enabled, 2.4GHz high output, 4-channel (transmitter only)**
6511 **Traxxas Link™ Wireless Module**

Ready-To-Race Model

77086-4 X-Maxx®: Brushless Electric Monster Truck with TQi Traxxas Link™ Enabled 2.4GHz Radio System & Traxxas Stability Management (TSM)®

Rear Suspension

7726 Bulkhead tie bar, upper (1)/ lower (2) (steel)
7727X Bulkhead, rear (upper & lower), center differential (replacing #7727 & #7728 requires #5107A ball bearings (2))
7752 Carriers, stub axle (left & right)

X-MAXX (77086-4)

7716	Mount, tie bar, front (1)/ rear (1)
7738	Shock tower, rear (left & right halves)
7831	**Suspension arm, black, lower (left, front or rear), heavy duty (1)**
7830	**Suspension arm, black, lower (right, front or rear), heavy duty (1)**
7829	**Suspension arm, black, upper (left or right, front or rear), heavy duty (2)**
7831X	**Suspension arm, blue, lower (left, front or rear), heavy duty (1)**
7830X	**Suspension arm, blue, lower (right, front or rear), heavy duty (1)**
7831G	**Suspension arm, green, lower (left, front or rear), heavy duty (1)**
7830G	**Suspension arm, green, lower (right, front or rear), heavy duty (1)**
7831T	**Suspension arm, orange, lower (left, front or rear), heavy duty (1)**
7830T	**Suspension arm, orange, lower (right, front or rear), heavy duty (1)**
7831R	**Suspension arm, red, lower (left, front or rear), heavy duty (1)**
7830R	**Suspension arm, red, lower (right, front or rear), heavy duty (1)**
7831A	**Suspension arm, white, lower (left, front or rear), heavy duty (1)**
7830A	**Suspension arm, white, lower (right, front or rear), heavy duty (1)**
7829X	**Suspension arms, blue, upper (left or right, front or rear), heavy duty (2)**
7829G	**Suspension arms, green, upper (left or right, front or rear), heavy duty (2)**
7731	Suspension arms, lower (left, front or rear) (1)
7730	Suspension arms, lower (right, front or rear) (1)
7829T	**Suspension arms, orange, upper (left or right, front or rear), heavy duty (2)**
7829R	**Suspension arms, red, upper (left or right, front or rear), heavy duty (2)**
7729	Suspension arms, upper (left or right, front or rear) (2)
7829A	**Suspension arms, white, upper (left or right, front or rear), heavy duty (2)**
7743	Suspension pin retainer (4)
7740	Suspension pin set, front or rear corner (hardened steel), 4x85mm (1), 4x47mm (3), 4x33mm (2) (qty 4, #7740 required for complete set)
7742	Suspension pin set, shock mount (front or rear, hardened steel), 4x25mm (2), 4x38mm (2)
7741	Suspension pins, 4x85mm (hardened steel) (2)

Shocks (GTX)

7765A	**Body, GTX shock (aluminum, black-anodized) (1)**
7765	Body, GTX shock (aluminum, blue-anodized) (1)
7765G	Body, GTX shock (aluminum, green-anodized) (1)
7765R	Body, GTX shock (aluminum, red-anodized) (1)
7765X	**Body, GTX shock (hard-anodized, PTFE-coated aluminum) (1)**
7762	Rebuild kit, GTX shocks (lower cartridge, assembled, pistons, piston nuts, bladders) (renews 2 shocks)
7763	Shaft, GTX shock, 110mm (assembled with rod ends & hollow balls) (steel, chrome finish) (2)
7763T	**Shaft, GTX shock, TiN-coated (2) (assembled with rod ends and steel hollow balls)**
7764A	**Shock caps, aluminum (blue-anodized), GTX shocks (4)/ spacers (8)**
7764G	**Shock caps, aluminum (green-anodized), GTX shocks (4)/ spacers (8)**
7764X	**Shock caps, aluminum (hard-anodized, PTFE-coated), GTX shocks (4)/ spacers (8)**
7764R	**Shock caps, aluminum (red-anodized), GTX shocks (4)/ spacers (8)**
7764	Shock caps, GTX shocks/ spring perch/ adjusters/ 2.5x14mm CS (2) (for 2 shocks)
7761A	**Shocks, GTX, aluminum (black-anodized) (fully assembled w/o springs) (2)**
7761	Shocks, GTX, aluminum (blue-anodized) (fully assembled w/o springs) (2)
7761G	Shocks, GTX, aluminum (green-anodized) (fully assembled w/o springs) (2)
7761R	Shocks, GTX, aluminum (red-anodized) (fully assembled w/o springs) (2)
1667	Silicone shock oil (30 wt), 60cc
7767	**Spring retainer (adjuster), blue-anodized aluminum, GTX shocks (4) (assembled with o-ring)**
7767G	**Spring retainer (adjuster), green-anodized aluminum, GTX shocks (4) (assembled with o-ring)**
7767X	**Spring retainer (adjuster), PTFE-coated aluminum, GTX shocks (4) (assembled with o-ring)**
7767R	**Spring retainer (adjuster), red-anodized aluminum, GTX shocks (4) (assembled with o-ring)**
7853	**Springs, shock (natural finish) (GTX) (0.824 rate) (2)**
7854	**Springs, shock (natural finish) (GTX) (0.929 rate) (2)**
7766	Springs, shock (natural finish) (GTX) (1.055 rate) (2)
7855	**Springs, shock (natural finish) (GTX) (1.199 rate) (2)**
7856	**Springs, shock (natural finish) (GTX) (1.346 rate) (2)**
7857	**Springs, shock (natural finish) (GTX) (1.450 rate) (2)**
7858	**Springs, shock (natural finish) (GTX) (1.538 rate) (2)**

Spur Gears & Pinion Gears

6484X	**Gear, 11-T pinion (1.0 metric pitch) (fits 5mm shaft)/ set screw (for use only with steel spur gears)**
6485X	**Gear, 12-T pinion (1.0 metric pitch) (fits 5mm shaft)/ set screw (for use only with steel spur gears)**
6486X	**Gear, 13-T pinion (1.0 metric pitch) (fits 5mm shaft)/ set screw (for use only with steel spur gears)**
6488X	**Gear, 14-T pinion (1.0 metric pitch) (fits 5mm shaft)/ set screw (for use only with steel spur gears)**
6487X	**Gear, 15-T pinion (1.0 metric pitch) (fits 5mm shaft)/ set screw (for use only with steel spur gears)**
6489X	**Gear, 16-T pinion (1.0 metric pitch) (fits 5mm shaft)/ set screw (for use only with steel spur gears)**
6490X	**Gear, 17-T pinion (1.0 metric pitch) (fits 5mm shaft)/ set screw (for use only with steel spur gears)**
6491X	Gear, 18-T pinion (1.0 metric pitch) (fits 5mm shaft)/ set screw (for use only with steel spur gears)
6494X	**Gear, 20-T pinion (1.0 metric pitch) (fits 5mm shaft)/ set screw (for use only with steel spur gears)**
6495X	**Gear, 22-T pinion (1.0 metric pitch) (fits 5mm shaft)/ set screw (for use only with steel spur gears)**
6496X	**Gear, 24-T pinion (1.0 metric pitch) (fits 5mm shaft)/ set screw (for use only with steel spur gears)**
6447R	**Spur gear, 46-tooth, steel (wide-face, 1.0 metric pitch)**
6448R	**Spur gear, 50-tooth, steel (wide-face, 1.0 metric pitch)**
6449X	Spur gear, 54-tooth, steel (1.0 metric pitch)
6449R	**Spur gear, 54-tooth, steel (wide-face, 1.0 metric pitch)**

Steering Components

5119	Ball bearings, blue rubber sealed (10x15x4mm) (2)
5116	Ball bearings, blue rubber sealed (5x11x4mm) (2)
7747	Servo horn, steering/ linkage, steering (46mm, assembled with pivot balls)
7746	Steering bellcranks/ bellcrank support/servo saver/ servo saver spring/ draglink/ 3x20mm shoulder screws (2)
7746X	**Steering link, steel/ servo saver spring, heavy duty (use with #2085X metal gear servo)**
7748	Toe links, molded composite, 173mm (158mm center to center) (black) (2)
7748X	**Toe links, X-Maxx® (TUBES blue-anodized, 7075-T6 aluminum, stronger than titanium) (157mm) (2)/ rod ends, assembled with steel hollow balls (4)/ aluminum wrench, 10mm (1)**
7748G	**Toe links, X-Maxx® (TUBES green-anodized, 7075-T6 aluminum, stronger than titanium) (157mm) (2)/ rod ends, assembled with steel hollow balls (4)/ aluminum wrench, 10mm (1)**
7748R	**Toe links, X-Maxx® (TUBES red-anodized, 7075-T6 aluminum, stronger than titanium) (157mm) (2)/ rod ends, assembled with steel hollow balls (4)/ aluminum wrench, 10mm (1)**

Suspension Linkage

7798	**Insert, threaded steel (replacement inserts for #7748G, 7748R, 7748X, 8542A, 8542R, 8542T, 8542X) (includes (1) left and (1) right threaded insert)**
7797	**Rod ends (4) (assembled with steel pivot balls) (replacement ends for #7748G, 7748R, 7748X, 8542A, 8542R, 8542T, 8542X)**
7743	Suspension pin retainer (4)
7740	Suspension pin set, front or rear corner (hardened steel), 4x85mm (1), 4x47mm (3), 4x33mm (2) (qty 4, #7740 required for complete set)
7742	Suspension pin set, shock mount (front or rear, hardened steel), 4x25mm (2), 4x38mm (2)
7741	Suspension pins, 4x85mm (hardened steel) (2)
7748	Toe links, molded composite, 173mm (158mm center to center) (black) (2)
7748X	**Toe links, X-Maxx® (TUBES blue-anodized, 7075-T6 aluminum, stronger than titanium) (157mm) (2)/ rod ends, assembled with steel hollow balls (4)/ aluminum wrench, 10mm (1)**
7748G	**Toe links, X-Maxx® (TUBES green-anodized, 7075-T6 aluminum, stronger than titanium) (157mm) (2)/ rod ends, assembled with steel hollow balls (4)/ aluminum wrench, 10mm (1)**
7748R	**Toe links, X-Maxx® (TUBES red-anodized, 7075-T6 aluminum, stronger than titanium) (157mm) (2)/ rod ends, assembled with steel hollow balls (4)/ aluminum wrench, 10mm (1)**

Team Traxxas Items

2514	Decal sheet, racing sponsors
9950	Official Team Traxxas® racing decal set (flag logo/ 6-color)
9909	Traxxas® racing banner, red & black (3x7 feet)

Tires & Wheels

7772A	**Tires & wheels, assembled, glued (X-Maxx® black chrome wheels, Maxx® AT tires, foam inserts) (left & right) (2)**
7772X	Tires & wheels, assembled, glued (X-Maxx® black wheels, Maxx® AT tires, foam inserts) (left & right) (2)

7773	**Tires & wheels, assembled, glued (X-Maxx® black wheels, paddle tires, foam inserts) (left & right) (2)**
7772G	**Tires & wheels, assembled, glued (X-Maxx® green wheels, Maxx® AT tires, foam inserts) (left & right) (2)**
7772T	**Tires & wheels, assembled, glued (X-Maxx® orange wheels, Maxx® AT tires, foam inserts) (left & right) (2)**
7772R	**Tires & wheels, assembled, glued (X-Maxx® satin chrome wheels, Maxx® AT tires, foam inserts) (left & right) (2)**
7770X	Tires, Maxx® AT (left & right) (2)/ foam inserts (2)
7757	Wheel hex clips (6)
7756	Wheel hubs, hex (2)/ hex clips (2)
7756X	**Wheel hubs, hex, aluminum (blue-anodized) (4)**
7756G	**Wheel hubs, hex, aluminum (green-anodized) (4)**
7756R	**Wheel hubs, hex, aluminum (red-anodized) (4)**
7758A	**Wheel nuts, splined, 17mm, serrated (black-anodized) (4)**
7758	Wheel nuts, splined, 17mm, serrated (blue-anodized) (4)
7758G	Wheel nuts, splined, 17mm, serrated (green-anodized) (4)
7758T	Wheel nuts, splined, 17mm, serrated (orange-anodized) (4)
7758R	Wheel nuts, splined, 17mm, serrated (red-anodized) (4)
5480X	Wheel wrench, splined, 17mm
7771	Wheels, X-Maxx®, black (left & right)

Transmission Components

7796	Center drive, torque-biasing (assembled)/ 17x26x5 ball bearings (2) (requires #7727X bulkheads)
7787	Covers, gear (3)
7785X	Input gear, transmission, 20-tooth/ 2.5x12mm pin
7786X	Input shaft, transmission (cush drive)
5040	Oil, differential (20M wt) (standard)
7784X	Output gear, 51-tooth, metal (requires #7785X input gear)

Traxxas Tools

3433X	**Body reamer (aluminum handle)**
3433	**Body reamer (plastic handle)**
3436	**Cap, body reamer**
3432	**Scissors, curved tip**
3431	**Scissors, straight tip**
8712	**Speed Bit Essentials Set, hex and nut driver, 7-piece, includes premium handle (medium), travel pouch, hex drivers (straight: 1.5mm, 2.0mm, 2.5mm) and nut drivers (5.0mm, 5.5mm, 7.0mm, and 8.0mm), 1/4" drive**
8721	**Speed bit handle, medium (one piece)**
8720	**Speed bit handle, premium, large (rubber overmold)**
8722	**Speed bit handle, premium, medium (rubber overmold)**
8710	**Speed Bit Master Set, hex and nut driver, 13-piece, includes premium handle (medium), travel pouch, hex drivers (straight: 1.5mm, 2.0mm, 2.5mm, 3.0mm), (ball-end: 2.0mm, 2.5mm, 3.0mm), and nut drivers (4.00mm, 4.50mm, 5.00mm, 5.50mm, 7.00mm, 8.00mm),**
8711	**Speed Bit Master Set, hex driver, 7-piece straight and ball end, includes premium handle (medium), travel pouch, hex drivers (straight: 1.5mm, 2.0mm, 2.5mm, 3.0mm) (ball end: 2.0mm, 2.5mm, 3.0mm), 1/4" drive**
8719	**Speed Bit Master Set, nut driver, 6-piece, includes premium handle (medium), travel pouch, and nut drivers (4.0mm, 4.5mm, 5.0mm, 5.5mm, 7.0mm, 8.0mm), 1/4" drive**
8716	**Speed Bit Set, hex driver, 2-piece ball-end (2.0mm, 2.5mm), 1/4" drive**
8716X	**Speed Bit Set, hex driver, 3-piece ball-end (2.0mm, 2.5mm, 3.0mm), 1/4" drive**
8715	**Speed Bit Set, hex driver, 3-piece straight (1.5mm, 2.0mm, 2.5mm), 1/4" drive**
8715X	**Speed Bit Set, hex driver, 4-piece straight (1.5mm, 2.0mm, 2.5mm, 3.0mm), 1/4" drive**
3415	**Tool set with pouch (includes 1.5mm, 2.0mm, 2.5mm, 3.0mm, 3.5mm, 4mm drivers/ 4mm, 5mm, 5.5mm, 7mm and 8mm nut drivers/ 2mm, 4mm, and 5mm slotted screwdrivers/ #00 Phillips, #0 Phillips, and #1 Phillips screwdrivers/ 4mm and 8mm wrench/ driver handle**
5480X	Wheel wrench, splined, 17mm

Turnbuckles & Threaded Rods

7798	**Insert, threaded steel (replacement inserts for #7748G, 7748R, 7748X, 8542A, 8542R, 8542T, 8542X) (includes (1) left and (1) right threaded insert)**
7797	**Rod ends (4) (assembled with steel pivot balls) (replacement ends for #7748G, 7748R, 7748X, 8542A, 8542R, 8542T, 8542X)**
7748	Toe links, molded composite, 173mm (158mm center to center) (black) (2)
7748X	**Toe links, X-Maxx® (TUBES blue-anodized, 7075-T6 aluminum, stronger than titanium) (157mm) (2)/ rod ends, assembled with steel hollow balls (4)/ aluminum wrench, 10mm (1)**
7748G	**Toe links, X-Maxx® (TUBES green-anodized, 7075-T6 aluminum, stronger than titanium) (157mm) (2)/ rod ends, assembled with steel hollow balls (4)/ aluminum wrench, 10mm (1)**
7748R	**Toe links, X-Maxx® (TUBES red-anodized, 7075-T6 aluminum, stronger than titanium) (157mm) (2)/ rod ends, assembled with steel hollow balls (4)/ aluminum wrench, 10mm (1)**

If you have questions or need technical assistance, call Traxxas at:

1-888-TRAXXAS

(1-888-872-9927) (U.S. residents only)

For orders, calls outside the U.S., and other information, call 972-549-3000, or fax to 972-549-3011 e-mail Traxxas at support@Traxxas.com

TRAXXAS.COM

REV. 200619 1227

TSM
TRAXXAS STABILITY MANAGEMENT

UNLIMITED DESERT RACER

MODEL 85086-4

PRO SCALE® 4WD RACE TRUCK



REPLICA BFGOODRICH® KR3 TIRES AND WHEELS

VXL-6S WATERPROOF BRUSHLESS POWER SYSTEM

TQi 2.4GHz TRANSMITTER COMPATIBLE WITH TRAXXAS LINK WIRELESS MODULE

PRO SCALE® PERFORMANCE

Pro Scale® is a new Traxxas innovation that captures true-scale realism and combines it with extreme 6s LiPo power and 50+ mph performance. The Traxxas Unlimited Desert Racer faithfully captures the look and feel of Trophy Trucks and Unlimited Trick Trucks as they charge hard across the desert at full speed. The 4-link solid rear axle design provides huge suspension travel with authentic driving dynamics. From the cantilever sway bars to the 8 GTR shocks, Traxxas has accurately reproduced a true unlimited desert race chassis in both form and function.

* With two 3s LiPo batteries (Sold Separately)

UNLIMITED DESERT RACER

Front Assembly

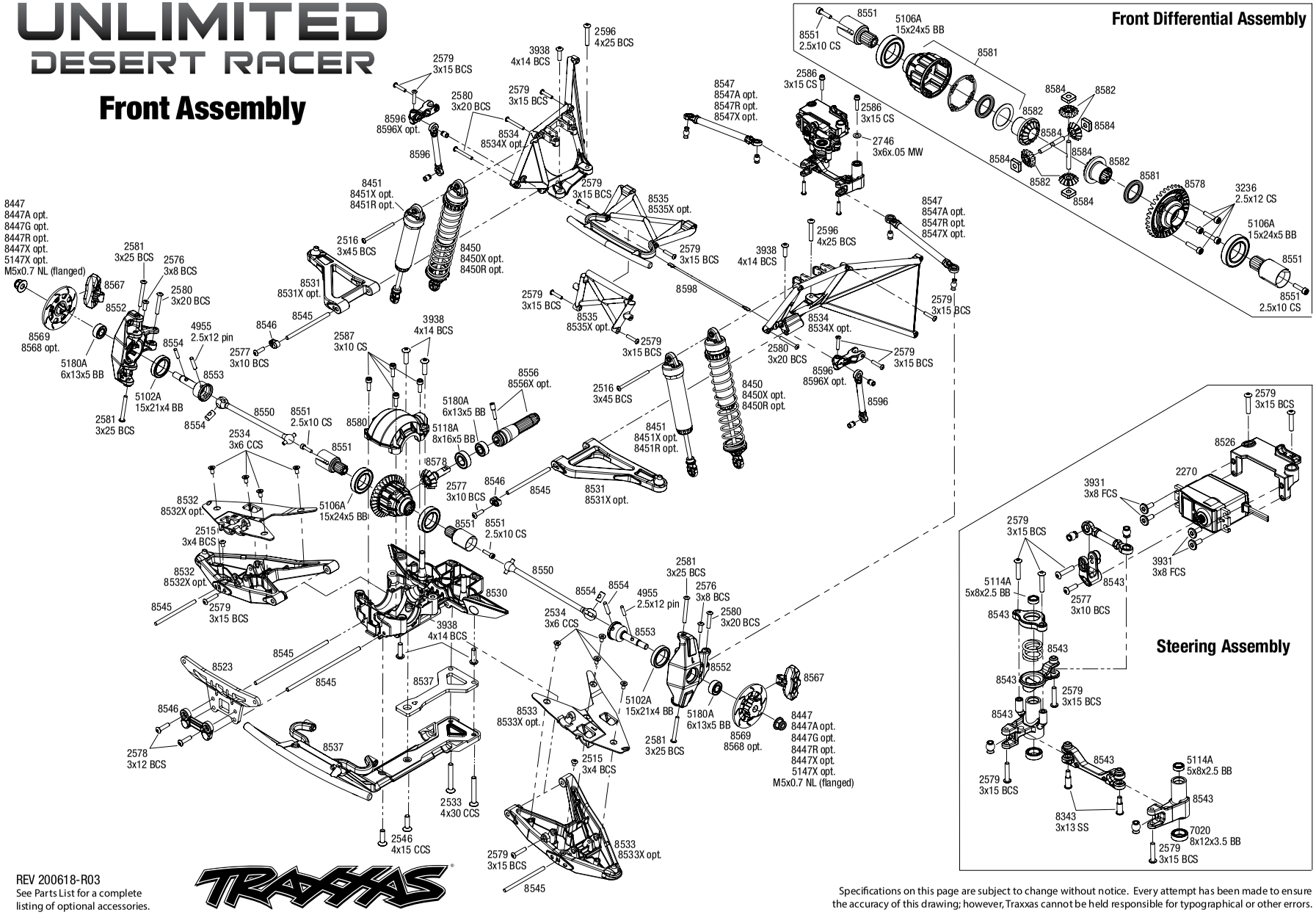

Front Differential Assembly

Steering Assembly

REV 200618-R03
See Parts List for a complete listing of optional accessories.

Specifications on this page are subject to change without notice. Every attempt has been made to ensure the accuracy of this drawing; however, Traxxas cannot be held responsible for typographical or other errors.

UNLIMITED
DESERT RACER

Chassis Assembly

CHASSIS TOP VIEW

CHASSIS BOTTOM VIEW

See Parts List for a complete listing of optional accessories.

REV 200618-R03

Specifications on this page are subject to change without notice. Every attempt has been made to ensure the accuracy of this drawing; however, Traxxas cannot be held responsible for typographical or other errors.

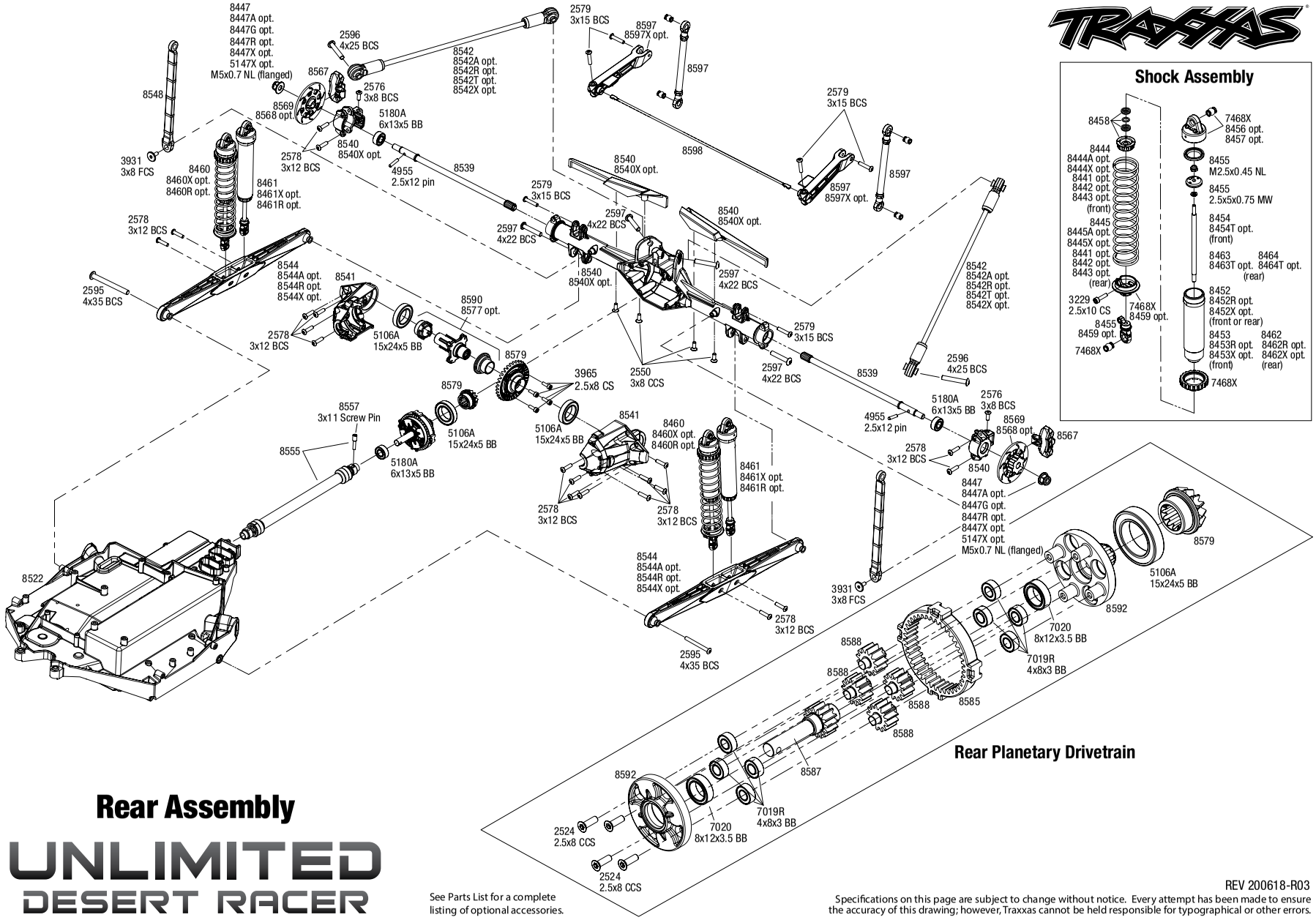

Rear Assembly

UNLIMITED
DESERT RACER

See Parts List for a complete listing of optional accessories.

REV 200618-R03

Specifications on this page are subject to change without notice. Every attempt has been made to ensure the accuracy of this drawing; however, Traxxas cannot be held responsible for typographical or other errors.

Questions? Call toll-free, 1-888-TRAXXAS

UNLIMITED DESERT RACER

Transmission Assembly

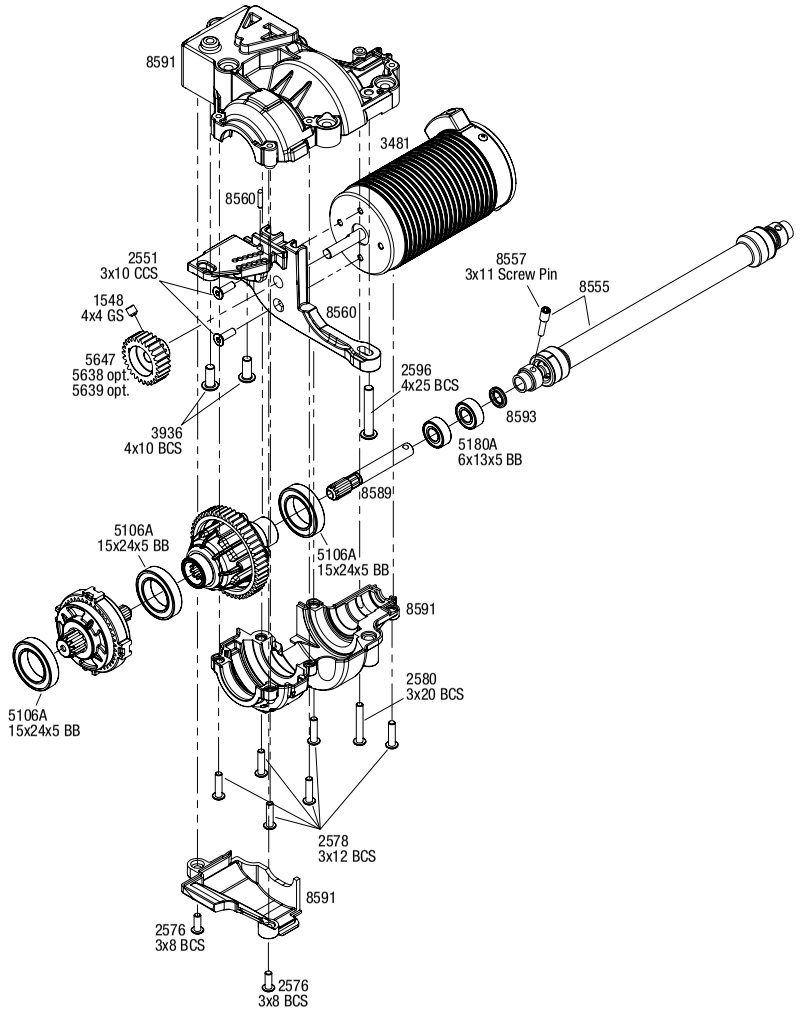

Center Differential

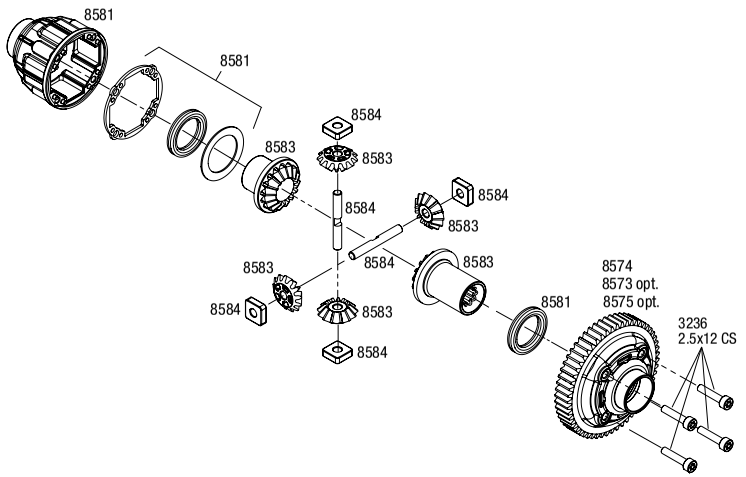

Transmission Planetary Gears

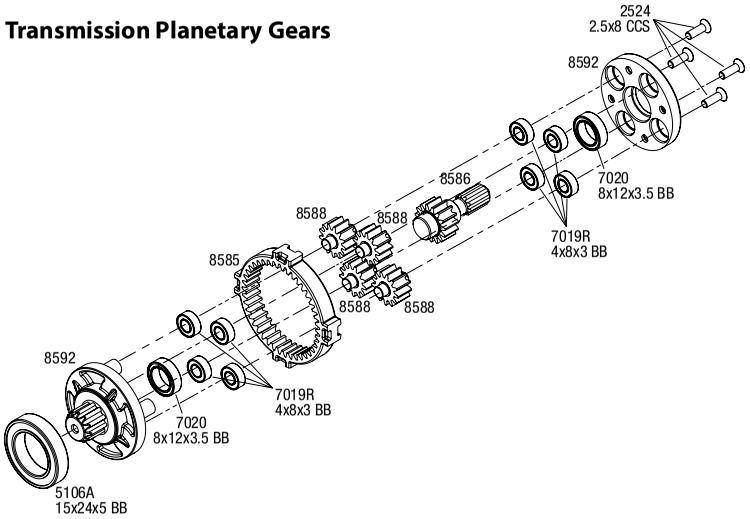

See Parts List for a complete listing of optional accessories.

REV 200618-R03

Specifications on this page are subject to change without notice. Every attempt has been made to ensure the accuracy of this drawing; however, Traxxas cannot be held responsible for typographical or other errors.

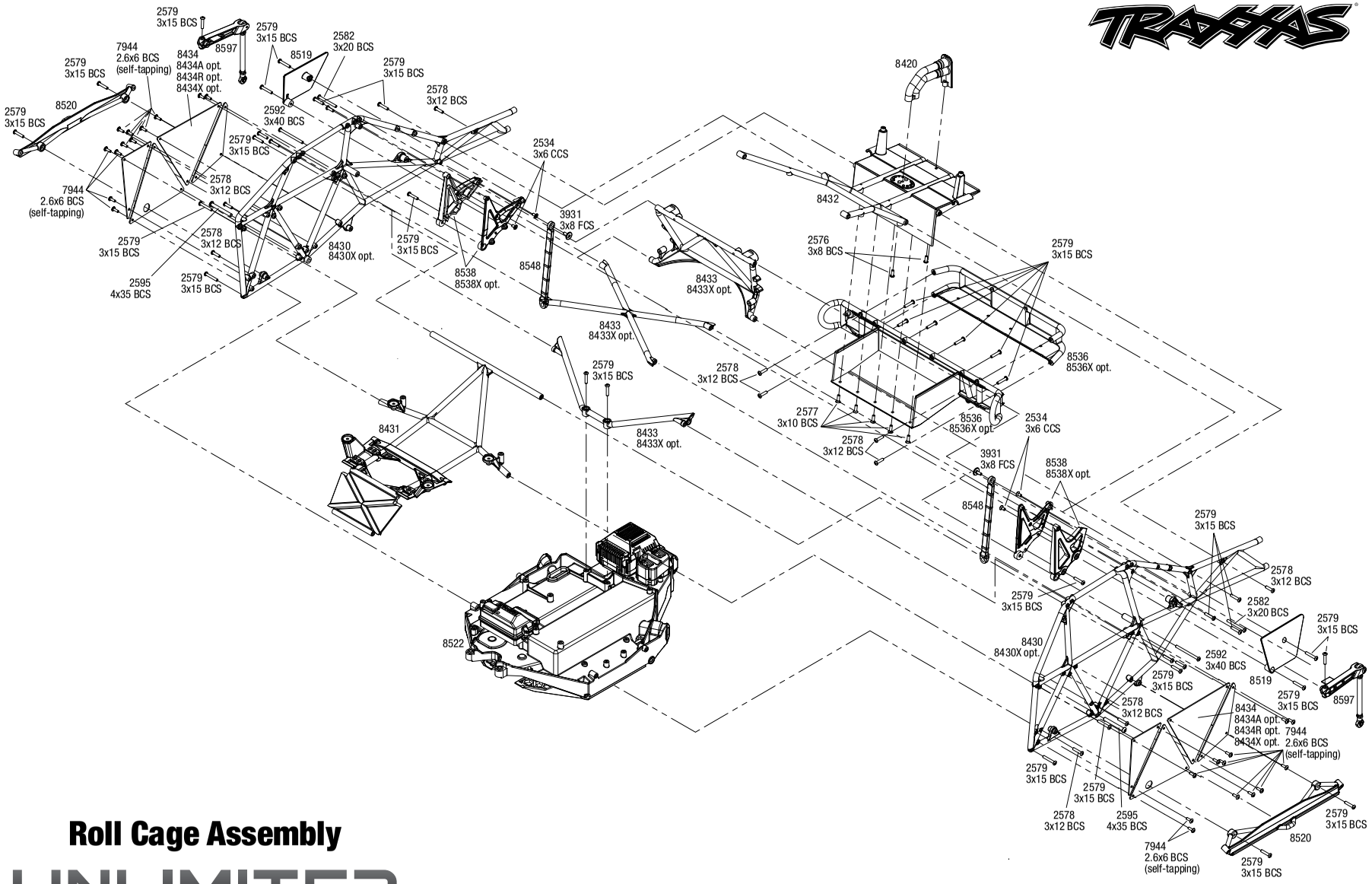

Roll Cage Assembly

UNLIMITED DESERT RACER

Specifications on this page are subject to change without notice. Every attempt has been made to ensure the accuracy of this drawing; however, Traxxas cannot be held responsible for typographical or other errors.

REV 200618-R03

See Parts List for a complete listing of optional accessories.

UNLIMITED DESERT RACER

Roll Cage Accessories

Specifications on this page are subject to change without notice. Every attempt has been made to ensure the accuracy of this drawing; however, Traxxas cannot be held responsible for typographical or other errors.

REV 200618-R03

See Parts List for a complete listing of optional accessories.

UNLIMITED DESERT RACER

Body & Modular Assembly

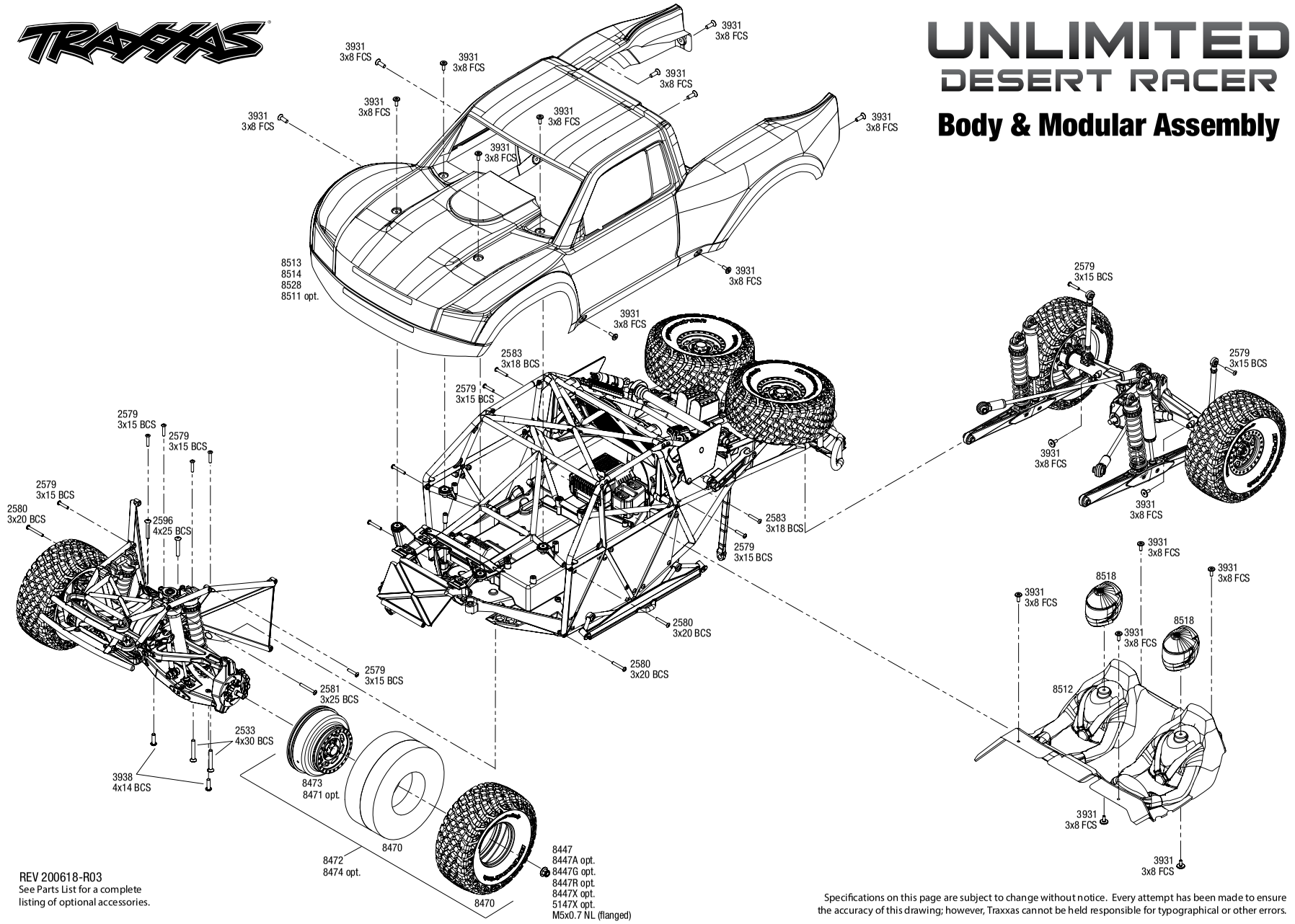

REV 200618-R03
See Parts List for a complete listing of optional accessories.

Specifications on this page are subject to change without notice. Every attempt has been made to ensure the accuracy of this drawing; however, Traxxas cannot be held responsible for typographical or other errors.

UNLIMITED DESERT RACER

LED Lights Assembly

Specifications on this page are subject to change without notice. Every attempt has been made to ensure the accuracy of this drawing; however, Traxxas cannot be held responsible for typographical or other errors.

REV -
See Parts List for a complete listing of optional accessories.

PARTS SHOWN IN BOLD ARE OPTIONAL ACCESSORIES.

Part categories and individual part listings are arranged alphabetically.

Axle Components

8540 Axle housing, rear/ axle supports, left & right/ axle hub, rear (2)
8540X Axle housing, rear/ differential carrier (satin black chrome-plated) (internal components sold separately)
8539 Axle shaft, rear

Bearings & Bushings

5106A Ball bearing, black rubber sealed (15x24x5mm) (2)
5102A Ball bearings, black rubber sealed (15x21x4mm) (2)
5114A Ball bearings, black rubber sealed (5x8x2.5mm) (2)
5180A Ball bearings, black rubber sealed (6x13x5mm) (2)
7019R Ball bearings, blue rubber sealed (4x8x3mm) (8)
7020 Ball bearings, blue rubber sealed (8x12x3.5mm) (2)
5118 Ball bearings, blue rubber sealed (8x16x5mm) (2)

Body & Accessories

8528 Body, Desert Racer, Traxxas Edition (painted)/ decals
8511 Body, Desert Racer® (clear, trimmed, requires painting)/ decal sheet
8513 Body, Desert Racer®, Fox® Edition (painted)/ decals
8514 Body, Desert Racer®, Rigid® Edition (painted)/ decals
8515 Decals, Unlimited Desert Racer®, Fox® Edition
8516 Decals, Unlimited Desert Racer®, Rigid® Edition
8518 Driver helmet, grey (2)
8512 Interior, clear (unpainted)
8517 Window nets (2)/ 2.5x8mm CS (8)

Brake Components

8567 Brake calipers, front or rear (grey) (4)
8569 Wheel hubs, hex (disc brake rotors) (4)
8568 Wheel hubs, hex, steel (4)

Bumpers & Skidplates

8535 Bumper, front/ bumper support
8535X Bumper, front/ bumper support (satin black chrome-plated)
8536 Bumper, rear/ bumper extension
8536X Bumper, rear/ bumper extension (satin black chrome-plated)
8537X Skidplate, front (plastic) (satin black chrome-plated)
8537 Skidplate, front (plastic)/ support plate (steel)

Chassis & Attachments

8525 Battery connector retainer/ wall support/ front & rear clips
8524 Battery door/ battery strap/ retainers (2)/ latch
8536 Bumper, rear/ bumper extension
8536X Bumper, rear/ bumper extension (satin black chrome-plated)
8522 Chassis
8420 Chassis tray/ driveshaft clamps/ fuel filler (black)
8518 Driver helmet, grey (2)
8512 Interior, clear (unpainted)
8560 Motor mount/ pin (2)
8520 Nerf bars (left or right) (2)
8519 Number plates, left & right
8526 Servo mount, steering
8538 Shock mounts, rear (left & right)
8538X Shock mounts, rear (left & right) (satin black chrome-plated)
8521 Skidplate, chassis
8544 Trailing arm (2) (assembled with hollow balls)
8544X Trailing arm, aluminum (blue-anodized) (2) (assembled with hollow balls)
8544A Trailing arm, aluminum (dark titanium anodized) (2) (assembled with hollow balls)
8544R Trailing arm, aluminum (red-anodized) (2) (assembled with hollow balls)
8431 Tube chassis, center section, front
8431X Tube chassis, center section, front (satin black chrome-plated)
8432 Tube chassis, center section, rear
8432X Tube chassis, center section, rear (satin black chrome-plated)
8433 Tube chassis, center support/ cage top/ rear cage support
8433X Tube chassis, center support/ cage top/ rear cage support (satin black chrome-plated)
8434 Tube chassis, inner panels (front (2)/ middle (4)/ rear (2))
8434A Tube chassis, inner panels (silver aluminum) (front (2)/ wheel well (4)/ middle (4)/ rear (2))
8434X Tube chassis, inner panels, aluminum (blue-anodized) (front (2)/ wheel well (4)/ middle (4)/ rear (2))
8434R Tube chassis, inner panels, aluminum (red-anodized) (front (2)/ wheel well (4)/ middle (4)/ rear (2))
8430 Tube chassis, side section (left & right)
8430X Tube chassis, side section (left & right) (satin black chrome-plated)

Differential Components

8581 Carrier, differential (front or center)/ x-ring gaskets (2)/ ring gear gasket/ 14.5x20 TW (2)
8581X Carrier, differential, aluminum (front or center)/ x-ring gaskets (2), ring gear gasket/ 14.5x20 TW (2)
8541 Carrier, differential, rear axle (left & right halves)
5136X Differential oil kit (1 each: 10K, 30K, 50K weights)
8576 Differential, rear (fully assembled)
8583 Gear set, center differential (output gears (2)/ spider gears (4))
8582 Gear set, differential (front) (output gears (2)/ spider gears (4))
8577 Gear set, rear differential (output gears (2)/ spider gears (4)) (#8581 required to build complete differential)
8580 Housing, differential (front)
8592 Housing, planetary gears (front & rear halves)
5042 Oil, differential (1M wt) (standard)
8588 Planetary gears (4)
8578 Ring gear, differential/ pinion gear, differential (front)
8579 Ring gear, differential/ pinion gear, differential (rear)
8585 Ring gear, planetary
8584 Spider gear shaft (2)/ spider bushing (4)
8586 Sun gear, planetary (center)
8587 Sun gear, planetary (rear)

Driveline Components

8551 Drive cup (1)/ 2.5x10 CS (for use only with #8550 driveshaft)
8555 Driveshaft, center rear, 6061-T6 aluminum (black-anodized) (fully assembled)/ 3mm screw pin (2)
8556X Driveshaft, center, front (steel)/ 2.5x12 screw pin
8550 Driveshaft, steel constant-velocity (shaft only, 96mm) (1)
8556 Driveshafts, center front/ 4mm screw pin (1)/ 3x10 CS (1)
8554 Rebuild kit, steel constant velocity driveshaft (includes drive pin & cross pin for two driveshaft assemblies)
8557 Screw pin, 3x11mm (with threadlock) (6)
8553 Stub axle, steel (use with #8550 driveshaft)
8569 Wheel hubs, hex (disc brake rotors) (4)
8568 Wheel hubs, hex, steel (4)

Front Suspension & Steering

8552 Axle carriers, left & right (1 each)
8523 Bulkhead tie bar, front (steel)
8530 Bulkhead, front
8550 Driveshaft, steel constant-velocity (shaft only, 96mm) (1)
8596 Linkage, sway bar, front (2) (assembled with hollow balls)/ sway bar arm (left & right)
8534 Mounts, suspension arm, upper (front) (left & right)
8534X Mounts, suspension arm, upper (front) (left & right) (satin black chrome-plated)
8543 Steering bellcranks/ servo saver/ servo saver spring/ servo spring retainer/servo horn, steering
8553 Stub axle, steel (use with #8550 driveshaft)
8533 Suspension arm, lower left/ arm insert (assembled with hollow ball)
8533X Suspension arm, lower left/ arm insert (satin black chrome-plated) (assembled with hollow ball)
8532 Suspension arm, lower right/ arm insert (assembled with hollow ball)
8532X Suspension arm, lower right/ arm insert (satin black chrome-plated) (assembled with hollow ball)
8531 Suspension arms, upper (left & right) (assembled with hollow balls)
8531X Suspension arms, upper (left & right) (satin black chrome-plated) (assembled with hollow balls)
8546 Suspension pin retainers (upper (2), lower (1))
8545 Suspension pin set (front) (3x51mm (2), 3x54mm (2), 3x93mm (2))
8596X Sway bar arms, front (satin-plated)
8598 Sway bars (front & rear)
8547 Toe links, front (2) (assembled with hollow balls)
8547X Toe links, front, Unlimited Desert Racer® (TUBES blue-anodized, 7075-T6 aluminum, stronger than titanium) (102mm) (2) (assembled with rod ends and hollow balls)/ aluminum wrench, 7mm (1)
8547A Toe links, front, Unlimited Desert Racer® (TUBES dark titanium anodized, 7075-T6 aluminum, stronger than titanium) (102mm) (2) (assembled with rod ends and hollow balls)/ aluminum wrench, 7mm (1)
8547R Toe links, front, Unlimited Desert Racer® (TUBES red-anodized, 7075-T6 aluminum, stronger than titanium) (102mm) (2) (assembled with rod ends and hollow balls)/ aluminum wrench, 7mm (1)

Questions? **Call toll-free, 1-888-TRAXXAS**

Hardware

2586	Head screws, 3x15mm cap-head machine (hex drive) (6) (TRX 2.5)
8447A	**Nuts, 5mm flanged nylon locking (aluminum, black-anodized, serrated) (4)**
8447X	**Nuts, 5mm flanged nylon locking (aluminum, blue-anodized, serrated) (4)**
8447G	**Nuts, 5mm flanged nylon locking (aluminum, green-anodized, serrated) (4)**
8447R	**Nuts, 5mm flanged nylon locking (aluminum, red-anodized, serrated) (4)**
8447	Nuts, 5mm flanged nylon locking (steel, black serrated) (8)
5147X	**Nuts, 5mm flanged nylon locking (steel, serrated) (8)**
4955	Pins, axle (2.5x12mm) (4)
8557	Screw pin, 3x11mm (with threadlock) (6)
5189	Screw pins, 4x13mm (with threadlock) (4)
3229	Screws, 2.5x10mm cap-head machine (hex drive) (6)
3236	Screws, 2.5x12mm cap-head machine (6)
3215	Screws, 2.5x6mm cap-head machine (hex drive) (6)
3965	Screws, 2.5x8mm cap-head machine (6)
2524	Screws, 2.5x8mm countersunk machine (hex drive) (6)
7944	Screws, 2.6x5mm button-head, self-tapping (hex drive) (6)
2577	Screws, 3x10mm button-head machine (hex drive) (6)
2587	Screws, 3x10mm cap-head machine (6) (no washer)
2578	Screws, 3x12mm button-head machine (hex drive) (6)
2579	Screws, 3x15mm button-head machine (hex drive) (6)
2553	Screws, 3x15mm countersunk machine (6) (hex drive)
2583	Screws, 3x18mm button-head machine (hex drive) (6)
2580	Screws, 3x20mm button-head machine (hex drive) (6)
2581	Screws, 3x25mm button-head machine (hex drive) (6)
2582	Screws, 3x30mm button-head machine (hex drive) (6)
2516	Screws, 3x45mm button-head machine (hex drive) (6)
2515	Screws, 3x4mm button-head machine (hex drive) (6)
2534	Screws, 3x6mm countersunk machine (6) (hex drive)
2576	Screws, 3x8mm button-head machine (hex drive) (6)
2550	Screws, 3x8mm countersunk machine (6) (hex drive)
3931	Screws, 3x8mm flat-head machine (hex drive) (6)
3936	Screws, 4x10mm button-head machine (hex drive) (6)
3938	Screws, 4x14mm button-head machine (hex drive) (6)
2546	Screws, 4x15mm countersunk machine (hex drive) (6)
2597	Screws, 4x22mm button-head machine (hex drive) (6)
2596	Screws, 4x25mm button-head machine (hex drive) (6)
2533	Screws, 4x30mm countersunk machine (hex drive) (6)
2595	Screws, 4x35mm button-head machine (hex drive) (6)
1548	Set (grub) screws, 3x4mm (8)/ 4x4mm (stainless) (4)
2746	Washers, 3x6mm metal (12)

LED Lights

8489	2-in-1 wire harness, LED lights (high-voltage)
6590	High-Voltage Power Amplifier
8486	LED light bar, front (high-voltage) (52 white LEDs (double row), 100mm wide)
8488	LED light bar, roof (curved, high-voltage) (52 white LEDs (single row), 202mm wide)
8485	LED light set, complete (includes front light bar (2), rear light bar, curved roof light bar, and high-voltage power amplifier)
8487	LED lightbar, rear, red (with amber class light) (high-voltage) (24 red LEDs, 24 amber LEDs, 100mm wide)

Motors & Electronics

8527	**Connector, 25.2 volt to 14.8 volt jumper (allows a Traxxas® dual-battery 25.2 ESC to run on a single 14.8V battery pack)**
3475	Cooling fan, Velineon® VXL ESC (fits VXL-6s & VXL-8s)
2272	Gear set (for 2270 waterproof servo)
2252	**Gear set, metal (for 2250, 2255 servos)**
8560	Motor mount/ pin (2)
3481	Motor, 2200Kv 75mm, brushless (with 6.5mm gold-plated connectors & high-efficiency heatsink)
2254	**Servo case, aluminum (blue-anodized) (middle) (for 2250 servo)**
2253	**Servo case, aluminum (red-anodized) (middle) (for 2255 servo)**
2251	**Servo case, plastic (top, middle, bottom)/ gaskets/ hardware (for 2250, 2255 servos)**
2271	Servo case/ gaskets (for 2270 waterproof servo)
8526	Servo mount, steering
2250	**Servo, digital high-torque 330 coreless, metal gear (ball bearing), waterproof**
2255	**Servo, digital high-torque 400 brushless, metal gear (ball bearing), waterproof**
2270	Servo, digital high-torque, metal gear (ball bearing), waterproof
3480	Velineon® VXL-6s Brushless Power System, waterproof (includes VXL-6s ESC and 2200Kv, 75mm motor)
3485	Velineon® VXL-6s Electronic Speed Control, waterproof (brushless) (fwd/rev/brake)

Radio System, Batteries & Chargers

2872X	**5000mAh 11.1v 3-Cell 25C LiPo Battery**
2889X	**5000mAh 14.8v 4-Cell 25C LiPo Battery**
2842X	**5000mAh 7.4v 2-Cell 25C LiPo Battery**
2843X	**5800mAh 7.4v 2-Cell 25C LiPo Battery**
2890X	**6700mAh 14.8v 4-Cell 25C LiPo Battery**
2869X	**7600mAh 7.4v 2-Cell 25C LiPo Battery**
2976	**AC to DC converter, 40W**
2938X	**Adapter, Traxxas® iD® LiPo battery (adapts Traxxas iD batteries to separate balance ports)**
1726	Antenna, tube (1)/ vinyl antenna cap (1)/ wire retainer (1)
2943	**Battery charge indicators (green (4), blue (4), grey (4))**
6548	Battery door, transmitter (replacement for #6516, 6517, 6528, 6529, 6530 transmitters)
2914	**Battery, Power Cell AA Alkaline (4)**
2996X	**Battery/charger completer pack (includes #2971 iD charger (1), #2889X 5000mAh 14.8V 4-cell 25C LiPo battery (1))**
2991	**Battery/charger completer pack (includes #2972 Dual iD® charger (1), #2869X 7600mAh 7.4V 2-cell 25C LiPo battery (2))**
2972	**Charger, EZ-Peak® Dual, 100W, NiMH/LiPo with iD® Auto Battery Identification**
2973	**Charger, EZ-Peak® Live Dual, 200W, NiMH/LiPo with iD® Auto Battery Identification**
2971	**Charger, EZ-Peak® Live, 100W, NiMH/LiPo with iD® Auto Battery Identification**
2970	**Charger, EZ-Peak® Plus, 4 amp, NiMH/LiPo with iD® Auto Battery Identification**
6525	**Communication link, telemetry expander**
8527	**Connector, 25.2 volt to 14.8 volt jumper (allows a Traxxas® dual-battery 25.2 ESC to run on a single 14.8V battery pack)**
6512	Cover plate, Traxxas Link™ Wireless Module
6566	**Data Link cable, telemetry expander (connects #6550X telemetry expander 2.0 to the #3485 VXL-6s or #3496 VXL-8s electronic speed control)**
2272	Gear set (for 2270 waterproof servo)
2252	**Gear set, metal (for 2250, 2255 servos)**
2968X	**LiPo cell voltage checker/balancer (includes #2938X adapter for Traxxas® iD® batteries)**
2968	**LiPo cell voltage checker/balancer (requires #2938X adapter for Traxxas® iD® batteries)**
6565	**MAXX® Link cable, telemetry expander (connects #6550X telemetry expander 2.0 to the #6590 high-voltage power amplifier)**
6535	**Mount, temperature sensor (electric motors)/ wire tie/ thermal pad**
6533	Receiver, micro, TQi 2.4GHz with telemetry & TSM (5-channel)
6552	**Seal kit, expander box (includes o-ring, seals, and silicone grease)**
6526	**Sensor, auto-detectable, temperature**
6527	**Sensor, auto-detectable, voltage**
6521	**Sensor, temperature and voltage (long)**
2254	**Servo case, aluminum (blue-anodized) (middle) (for 2250 servo)**
2253	**Servo case, aluminum (red-anodized) (middle) (for 2255 servo)**
2251	**Servo case, plastic (top, middle, bottom)/ gaskets/ hardware (for 2250, 2255 servos)**
2271	Servo case/ gaskets (for 2270 waterproof servo)
2250	**Servo, digital high-torque 330 coreless, metal gear (ball bearing), waterproof**
2255	**Servo, digital high-torque 400 brushless, metal gear (ball bearing), waterproof**
2270	Servo, digital high-torque, metal gear (ball bearing), waterproof
6553X	**Telemetry expander 2.0 and GPS module 2.0, TQi radio system**
6550X	**Telemetry expander 2.0, TQi radio system (for use only with #6551X GPS module)**
6551X	**Telemetry GPS module 2.0, TQi radio system (for use only with #6550X telemetry expander)**
6528	Transmitter, TQi Traxxas Link™ enabled, 2.4GHz high output, 2-channel (transmitter only)
6529	**Transmitter, TQi Traxxas Link™ enabled, 2.4GHz high output, 3-channel (transmitter only)**
6530	**Transmitter, TQi Traxxas Link™ enabled, 2.4GHz high output, 4-channel (transmitter only)**
6511	**Traxxas Link™ Wireless Module**

Ready-To-Race Model

85076-4	Unlimited Desert Racer®: 4WD Electric Race Truck with TQi Traxxas Link™ Enabled 2.4GHz Radio System and Traxxas Stability Management (TSM)®

Rear Suspension

8540	Axle housing, rear/ axle supports, left & right/ axle hub, rear (2)
8540X	**Axle housing, rear/ differential carrier (satin black chrome-plated) (internal components sold separately)**

8539 Axle shaft, rear
8555 Driveshaft, center rear, 6061-T6 aluminum (black-anodized) (fully assembled)/ 3mm screw pin (2)
8548 Limit strap, rear suspension (2)/ 3x8 flat-head screw (4)
8597 Linkage, sway bar, rear (2) (assembled with hollow balls)/ sway bar arm (left & right)
8538 Shock mounts, rear (left & right)
8538X Shock mounts, rear (left & right) (satin black chrome-plated)
8590 Spool/ spacers (left & right)/ 2.5x8 CS (4)
8542T Suspension link, rear (upper) (aluminum, black-anodized) (10x206mm, center to center) (2) (assembled with hollow balls)
8542A Suspension link, rear (upper) (aluminum, blue-anodized) (10x206mm, center to center) (2) (assembled with hollow balls)
8542R Suspension link, rear (upper) (aluminum, red-anodized) (10x206mm, center to center) (2) (assembled with hollow balls)
8542X Suspension link, rear (upper) (heavy duty, steel) (7x206mm, center to center) (2) (assembled with hollow balls)
8542 Suspension link, rear (upper) (steel) (4x206mm, center to center) (2) (assembled with hollow balls)
8597X Sway bar arms, rear (satin-plated)
8598 Sway bars (front & rear)
8544 Trailing arm (2) (assembled with hollow balls)
8544X Trailing arm, aluminum (blue-anodized) (2) (assembled with hollow balls)
8544A Trailing arm, aluminum (dark titanium anodized) (2) (assembled with hollow balls)
8544R Trailing arm, aluminum (red-anodized) (2) (assembled with hollow balls)

Scale Details

8426 Batteries, black (2)
8422 Fire extinguisher, red (2)
8425 Floor jack & handle, grey
8424 Oil bottles, grey (2)
8421 Radiator, black
8423 Shock reservoirs, black (2)

Shocks (GTR)

8452X Body, GTR shock, 64mm, aluminum (blue-anodized) (front or rear, threaded)
8453X Body, GTR shock, 64mm, aluminum (blue-anodized) (front, no threads)
8452R Body, GTR shock, 64mm, aluminum (red-anodized) (front or rear, threaded)
8453R Body, GTR shock, 64mm, aluminum (red-anodized) (front, no threads)
8452 Body, GTR shock, 64mm, silver aluminum (front or rear, threaded)
8453 Body, GTR shock, 64mm, silver aluminum (front, no threads)
8462X Body, GTR shock, 77mm, aluminum (blue-anodized) (rear, no threads)
8462R Body, GTR shock, 77mm, aluminum (red-anodized) (rear, no threads)
8462 Body, GTR shock, 77mm, silver aluminum (rear, no threads)
7468X Caps & spring retainers, GTR shock (upper cap (2)/ hollow balls (4)/ bottom cap (2)/ upper retainer (2)/ lower retainer (2))
8458 Double seal kit, GTR shocks (x-rings (4)/ 4x6x0.5mm PTFE-coated washers (2)/ bottom caps (2)) (renews 2 shocks)
8455 Rebuild kit, GTR shocks (x-rings, bladders, pistons, piston nuts, shock rod ends) (renews 2 shocks)
8456 Shock caps, aluminum (black-anodized), Fox® Shocks (4)
8457 Shock caps, aluminum (blue-anodized), King® Shocks (4)
8538 Shock mounts, rear (left & right)
8538X Shock mounts, rear (left & right) (satin black chrome-plated)
8454 Shock shaft, 69mm (GTR) (front) (2)
8454T Shock shaft, 69mm (GTR) (front) (TiN-coated) (2)
8463 Shock shaft, 74mm (GTR) (rear) (2)
8463T Shock shaft, 74mm (GTR) (rear) (TiN-coated) (2)
8464 Shock shaft, 81mm (GTR) (rear) (2)
8464T Shock shaft, 81mm (GTR) (rear) (TiN-coated) (2)
8451X Shocks, GTR, 134mm, aluminum (blue-anodized) (fully assembled w/o springs) (front, no threads) (2)
8450X Shocks, GTR, 134mm, aluminum (blue-anodized) (fully assembled w/o springs) (front, threaded) (2)
8451R Shocks, GTR, 134mm, aluminum (red-anodized) (fully assembled w/o springs) (front, no threads) (2)
8450R Shocks, GTR, 134mm, aluminum (red-anodized) (fully assembled w/o springs) (front, threaded) (2)
8451 Shocks, GTR, 134mm, silver aluminum (fully assembled w/o springs) (front, no threads) (2)
8450 Shocks, GTR, 134mm, silver aluminum (fully assembled w/o springs) (front, threaded) (2)
8460X Shocks, GTR, 139mm, aluminum (blue-anodized) (fully assembled w/o springs) (rear, threaded) (2)
8460R Shocks, GTR, 139mm, aluminum (red-anodized) (fully assembled w/o springs) (rear, threaded) (2)
8460 Shocks, GTR, 139mm, silver aluminum (fully assembled w/o springs) (rear, threaded) (2)
8461X Shocks, GTR, 160mm, aluminum (blue-anodized) (fully assembled w/o springs) (rear, no threads) (2)
8461R Shocks, GTR, 160mm, aluminum (red-anodized) (fully assembled w/o springs) (rear, no threads) (2)
8461 Shocks, GTR, 160mm, silver aluminum (fully assembled w/o springs) (rear, no threads) (2)
8459 Spring retainers, lower (captured) (4)/ 2.5x10 CS (4)
8443 Spring, shock, 139mm (natural finish) (GTR) (progressive, 0.937 rate, orange stripe) (2)
8442 Spring, shock, 139mm (natural finish) (GTR) (progressive, 1.146 rate, green stripe) (2)
8441 Spring, shock, 139mm (natural finish) (GTR) (progressive, 1.250 rate, blue stripe) (2)
8444A Spring, shock, front (blue) (GTR) (progressive, 0.833 rate, white stripe) (2)
8444 Spring, shock, front (natural finish) (GTR) (progressive, 0.833 rate, white stripe) (2)
8444X Spring, shock, front (silver) (GTR) (progressive, 0.833 rate, white stripe) (2)
8445A Spring, shock, rear (blue) (GTR) (progressive, 1.042 rate) (2)
8445 Spring, shock, rear (natural finish) (GTR) (progressive, 1.042 rate) (2)
8445X Spring, shock, rear (silver) (GTR) (progressive, 1.042 rate) (2)

Spur Gears & Pinion Gears

5647 Gear, 27-T pinion (0.8 metric pitch, compatible with 32-pitch) (fits 5mm shaft)/ set screw
5638 Gear, 31-T pinion (0.8 metric pitch, compatible with 32-pitch) (fits 5mm shaft)/ set screw
5639 Gear, 34-T pinion (0.8 metric pitch, compatible with 32-pitch) (fits 5mm shaft)/ set screw
8573 Gear, center differential, 47-tooth (spur gear)
8574 Gear, center differential, 51-tooth (spur gear)
8575 Gear, center differential, 55-tooth (spur gear)

Steering Components

8543 Steering bellcranks/ servo saver/ servo saver spring/ servo spring retainer/servo horn, steering
8553 Stub axle, steel (use with #8550 driveshaft)
8547 Toe links, front (2) (assembled with hollow balls)
8547X Toe links, front, Unlimited Desert Racer® (TUBES blue-anodized, 7075-T6 aluminum, stronger than titanium) (102mm) (2) (assembled with rod ends and hollow balls)/ aluminum wrench, 7mm (1)
8547A Toe links, front, Unlimited Desert Racer® (TUBES dark titanium anodized, 7075-T6 aluminum, stronger than titanium) (102mm) (2) (assembled with rod ends and hollow balls)/ aluminum wrench, 7mm (1)
8547R Toe links, front, Unlimited Desert Racer® (TUBES red-anodized, 7075-T6 aluminum, stronger than titanium) (102mm) (2) (assembled with rod ends and hollow balls)/ aluminum wrench, 7mm (1)

Suspension Linkage

8542T Suspension link, rear (upper) (aluminum, black-anodized) (10x206mm, center to center) (2) (assembled with hollow balls)
8542A Suspension link, rear (upper) (aluminum, blue-anodized) (10x206mm, center to center) (2) (assembled with hollow balls)
8542R Suspension link, rear (upper) (aluminum, red-anodized) (10x206mm, center to center) (2) (assembled with hollow balls)
8542X Suspension link, rear (upper) (heavy duty, steel) (7x206mm, center to center) (2) (assembled with hollow balls)
8542 Suspension link, rear (upper) (steel) (4x206mm, center to center) (2) (assembled with hollow balls)
8546 Suspension pin retainers (upper (2), lower (1))
8545 Suspension pin set (front) (3x51mm (2), 3x54mm (2), 3x93mm (2))
8547 Toe links, front (2) (assembled with hollow balls)
8547X Toe links, front, Unlimited Desert Racer® (TUBES blue-anodized, 7075-T6 aluminum, stronger than titanium) (102mm) (2) (assembled with rod ends and hollow balls)/ aluminum wrench, 7mm (1)
8547A Toe links, front, Unlimited Desert Racer® (TUBES dark titanium anodized, 7075-T6 aluminum, stronger than titanium) (102mm) (2) (assembled with rod ends and hollow balls)/ aluminum wrench, 7mm (1)
8547R Toe links, front, Unlimited Desert Racer® (TUBES red-anodized, 7075-T6 aluminum, stronger than titanium) (102mm) (2) (assembled with rod ends and hollow balls)/ aluminum wrench, 7mm (1)
8544 Trailing arm (2) (assembled with hollow balls)
8544X Trailing arm, aluminum (blue-anodized) (2) (assembled with hollow balls)

8544A	**Trailing arm, aluminum (dark titanium anodized) (2) (assembled with hollow balls)**
8544R	**Trailing arm, aluminum (red-anodized) (2) (assembled with hollow balls)**

Team Traxxas Items

2514	**Decal sheet, racing sponsors**
6160X	**DVD, Maxx® Power! Full Throttle Action (sleeve)**
9950	**Official Team Traxxas® racing decal set (flag logo/ 6-color)**
9909	**Traxxas® racing banner, red & black (3x7 feet)**

Tires & Wheels

8472	Tires and wheels, assembled, glued (Desert Racer® wheels, black with orange beadlock, BFGoodrich® Baja KR3 tires) (2)
8475	**Tires and wheels, assembled, glued (Desert Racer® wheels, paddle tires, foam inserts) (2)**
8474	**Tires and wheels, assembled, glued (Method Race Wheels, black with red beadlock, BFGoodrich® Baja KR3 tires) (2)**
8470	Tires, BFGoodrich® Baja KR3/ foam inserts (2)
8473	Wheels, Desert Racer® (2)
8471	**Wheels, Method Race (2)**

Transmission Components

8591	Gearbox housing (includes upper housing, lower housing, & gear cover)
8592	Housing, planetary gears (front & rear halves)
8589	Output shaft, transmission/ x-ring
8588	Planetary gears (4)
8585	Ring gear, planetary
8593	X-ring seals, 6x9.6mm (4)

Traxxas Tools

3433X	**Body reamer (aluminum handle)**
3433	**Body reamer (plastic handle)**
3436	**Cap, body reamer**
3432	**Scissors, curved tip**
3431	**Scissors, straight tip**
8712	**Speed Bit Essentials Set, hex and nut driver, 7-piece, includes premium handle (medium), travel pouch, hex drivers (straight: 1.5mm, 2.0mm, 2.5mm) and nut drivers (5.0mm, 5.5mm, 7.0mm, and 8.0mm), 1/4" drive**
8721	**Speed bit handle, medium (one piece)**
8720	**Speed bit handle, premium, large (rubber overmold)**
8722	**Speed bit handle, premium, medium (rubber overmold)**
8710	**Speed Bit Master Set, hex and nut driver, 13-piece, includes premium handle (medium), travel pouch, hex drivers (straight: 1.5mm, 2.0mm, 2.5mm, 3.0mm), (ball-end: 2.0mm, 2.5mm, 3.0mm), and nut drivers (4.00mm, 4.50mm, 5.00mm, 5.50mm, 7.00mm, 8.00mm),**
8711	**Speed Bit Master Set, hex driver, 7-piece straight and ball end, includes premium handle (medium), travel pouch, hex drivers (straight: 1.5mm, 2.0mm, 2.5mm, 3.0mm) (ball end: 2.0mm, 2.5mm, 3.0mm), 1/4" drive**
8719	**Speed Bit Master Set, nut driver, 6-piece, includes premium handle (medium), travel pouch, and nut drivers (4.0mm, 4.5mm, 5.0mm, 5.5mm, 7.0mm, 8.0mm), 1/4" drive**
8716	**Speed Bit Set, hex driver, 2-piece ball-end (2.0mm, 2.5mm), 1/4" drive**
8716X	**Speed Bit Set, hex driver, 3-piece ball-end (2.0mm, 2.5mm, 3.0mm), 1/4" drive**
8715	**Speed Bit Set, hex driver, 3-piece straight (1.5mm, 2.0mm, 2.5mm), 1/4" drive**
8715X	**Speed Bit Set, hex driver, 4-piece straight (1.5mm, 2.0mm, 2.5mm, 3.0mm), 1/4" drive**
3415	**Tool set with pouch (includes 1.5mm, 2.0mm, 2.5mm, 3.0mm, 3.5mm, 4mm drivers/ 4mm, 5mm, 5.5mm, 7mm and 8mm nut drivers/ 2mm, 4mm, and 5mm slotted screwdrivers/ #00 Phillips, #0 Phillips, and #1 Phillips screwdrivers/ 4mm and 8mm wrench/ driver handle**

Turnbuckles & Threaded Rods

8547	Toe links, front (2) (assembled with hollow balls)
8547X	**Toe links, front, Unlimited Desert Racer® (TUBES blue-anodized, 7075-T6 aluminum, stronger than titanium) (102mm) (2) (assembled with rod ends and hollow balls)/ aluminum wrench, 7mm (1)**
8547A	**Toe links, front, Unlimited Desert Racer® (TUBES dark titanium anodized, 7075-T6 aluminum, stronger than titanium) (102mm) (2) (assembled with rod ends and hollow balls)/ aluminum wrench, 7mm (1)**
8547R	**Toe links, front, Unlimited Desert Racer® (TUBES red-anodized, 7075-T6 aluminum, stronger than titanium) (102mm) (2) (assembled with rod ends and hollow balls)/ aluminum wrench, 7mm (1)**

If you have questions or need technical assistance, call Traxxas at:

1-888-TRAXXAS

(1-888-872-9927) (U.S. residents only)

For orders, calls outside the U.S., and other information, call 972-549-3000, or fax to 972-549-3011 e-mail Traxxas at support@Traxxas.com

TRAXXAS.com

REV. 200915 0812

E-REVO

MODEL 86086-4

1/10 SCALE 4WD ELECTRIC MONSTER TRUCK



WATERPROOF VXL-6s

TQi 2.4GHz TRANSMITTER COMPATIBLE WITH TRAXXAS LINK WIRELESS MODULE

TALON EXT TIRES AND SIX-SPOKE BLACK WHEELS

POWER. STRENGTH. SPEED.

There is no other monster truck like E-Revo. It embodies the highest level of creativity in design and engineering that unleashed a stunning array of new technology, new innovation, and unheard of speed that reset every benchmark for racing monster truck performance. Now there is a new generation of E-Revo. This new E-Revo retains all the benefits of its original ground-breaking, award-winning design, but fortifies them with brute strength and an intense, take-no-prisoners attitude to deliver what is simply the ultimate 6s monster. Get ready for a whole new level of power, strength, and speed.

* With optional gearing

Front Assembly

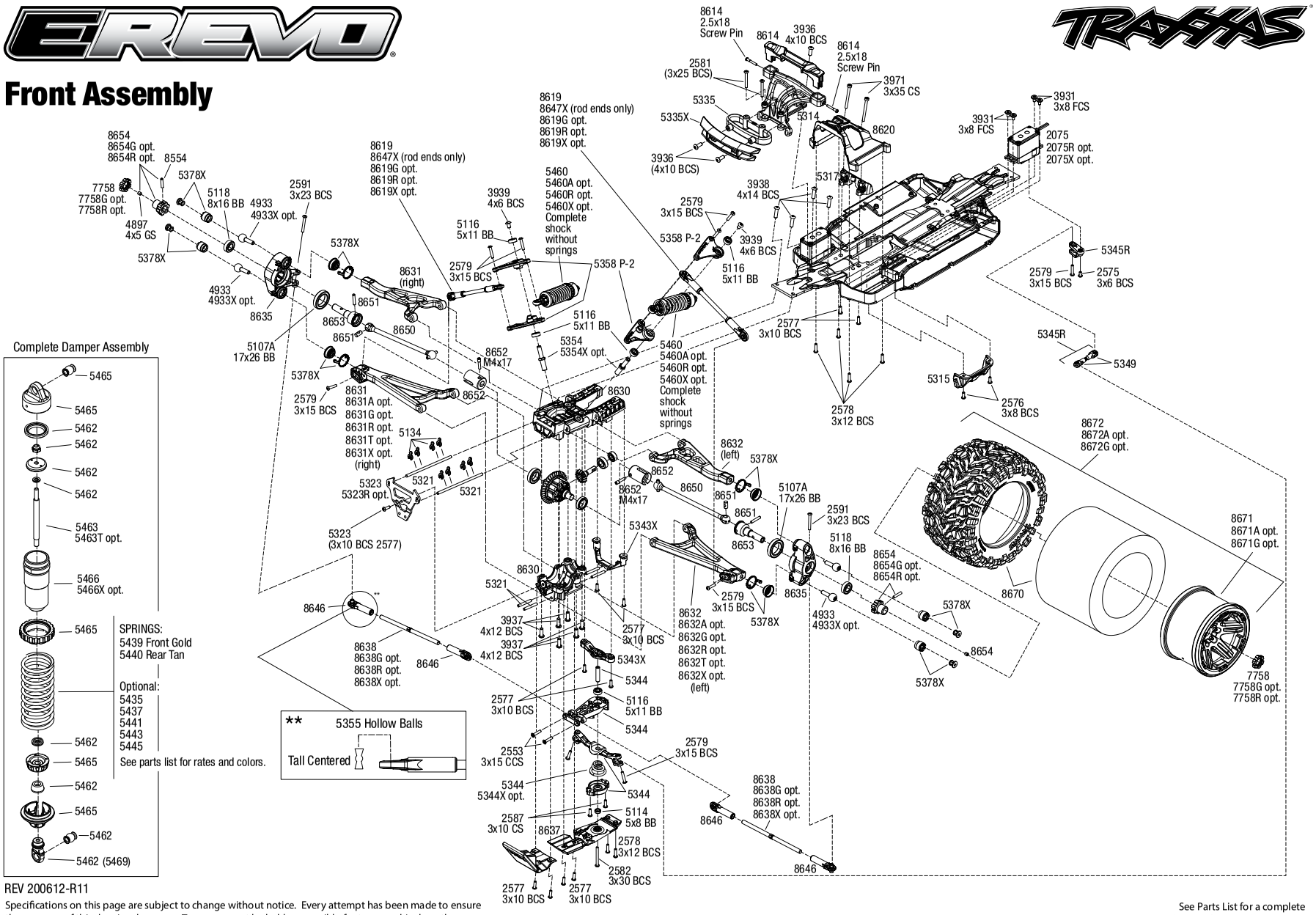

REV 200612-R11

Specifications on this page are subject to change without notice. Every attempt has been made to ensure the accuracy of this drawing; however, Traxxas cannot be held responsible for typographical or other errors.

See Parts List for a complete listing of optional accessories.

E-REVO® (86086-4)

EXPLODED VIEWS

Chassis Assembly

See Parts List for a complete listing of optional accessories.

REV 200612-R11

Specifications on this page are subject to change without notice. Every attempt has been made to ensure the accuracy of this drawing; however, Traxxas cannot be held responsible for typographical or other errors.

Questions? **Call toll-free, 1-888-TRAXXAS**

Rear Assembly

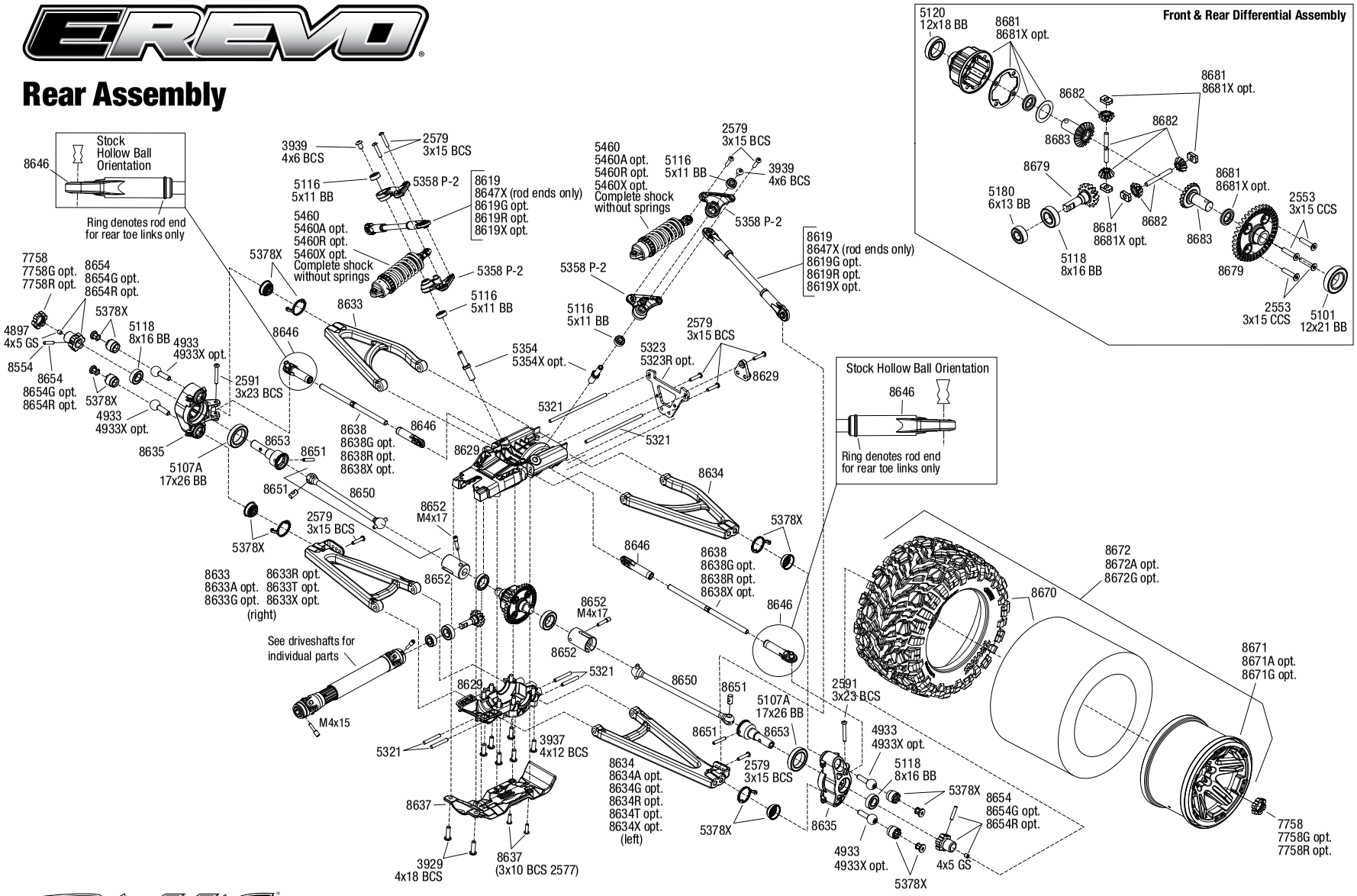

REV 200612-R11

See Parts List for a complete listing of optional accessories.

Specifications on this page are subject to change without notice. Every attempt has been made to ensure the accuracy of this drawing; however, Traxxas cannot be held responsible for typographical or other errors.

E-REVO® (86086-4)

Transmission Assembly

REV 200612-R11

Specifications on this page are subject to change without notice. Every attempt has been made to ensure the accuracy of this drawing; however, Traxxas cannot be held responsible for typographical or other errors.

See Parts List for a complete listing of optional accessories.

Wing Assembly

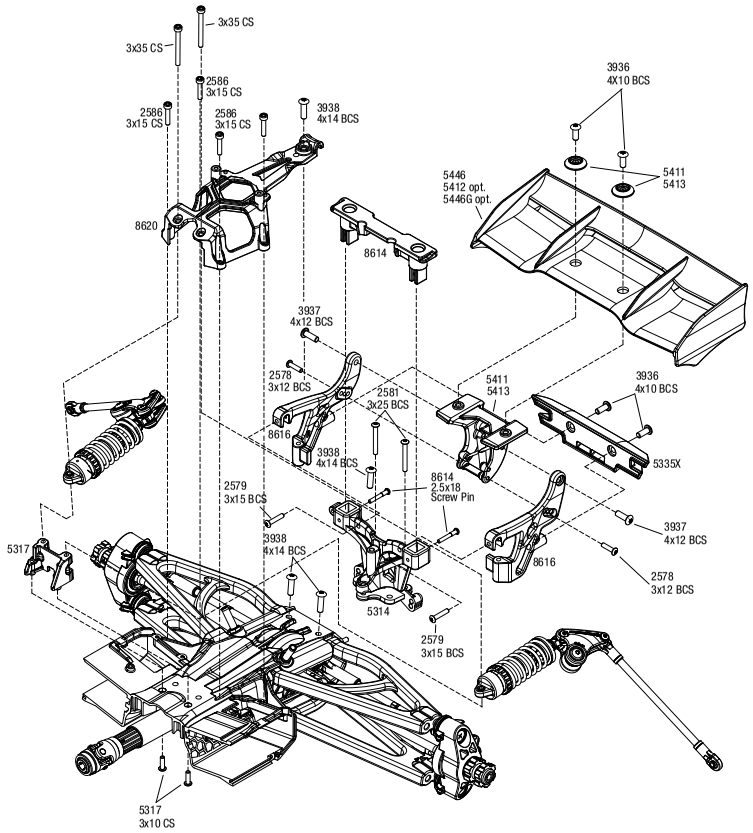

Driveshaft Assembly

Center Front Driveshaft Assembly

Fully assembled steel constant-velocity driveshafts available as optional part #8655R

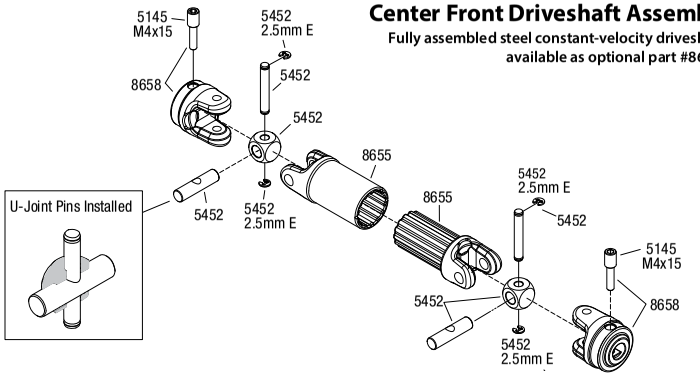

Center Rear Driveshaft Assembly

Fully assembled steel constant-velocity driveshafts available as optional part #8655R

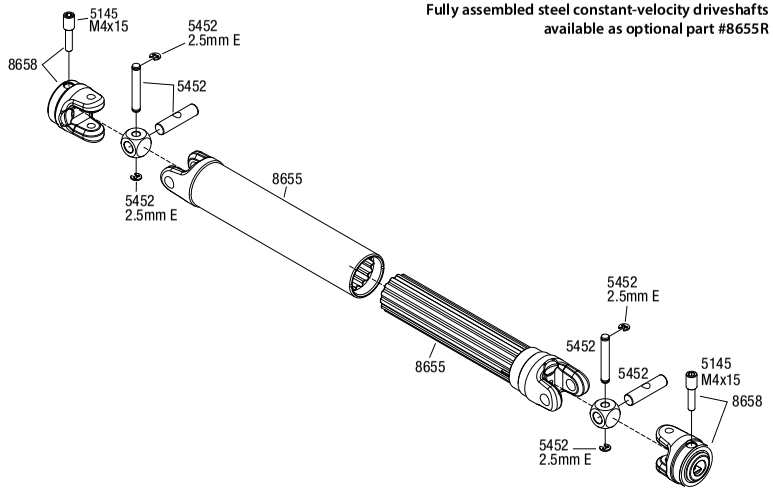

Specifications on this page are subject to change without notice.
Every attempt has been made to ensure the accuracy of this drawing; however, Traxxas cannot be held responsible for typographical or other errors. See Parts List for a complete listing of optional accessories.

REV 200612-R11

Body Assembly

Completed Assembly (view from bottom)

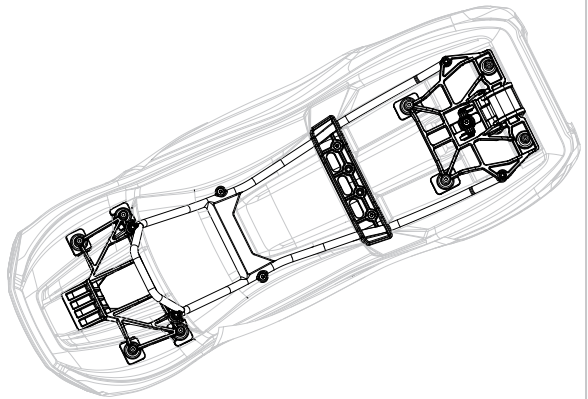

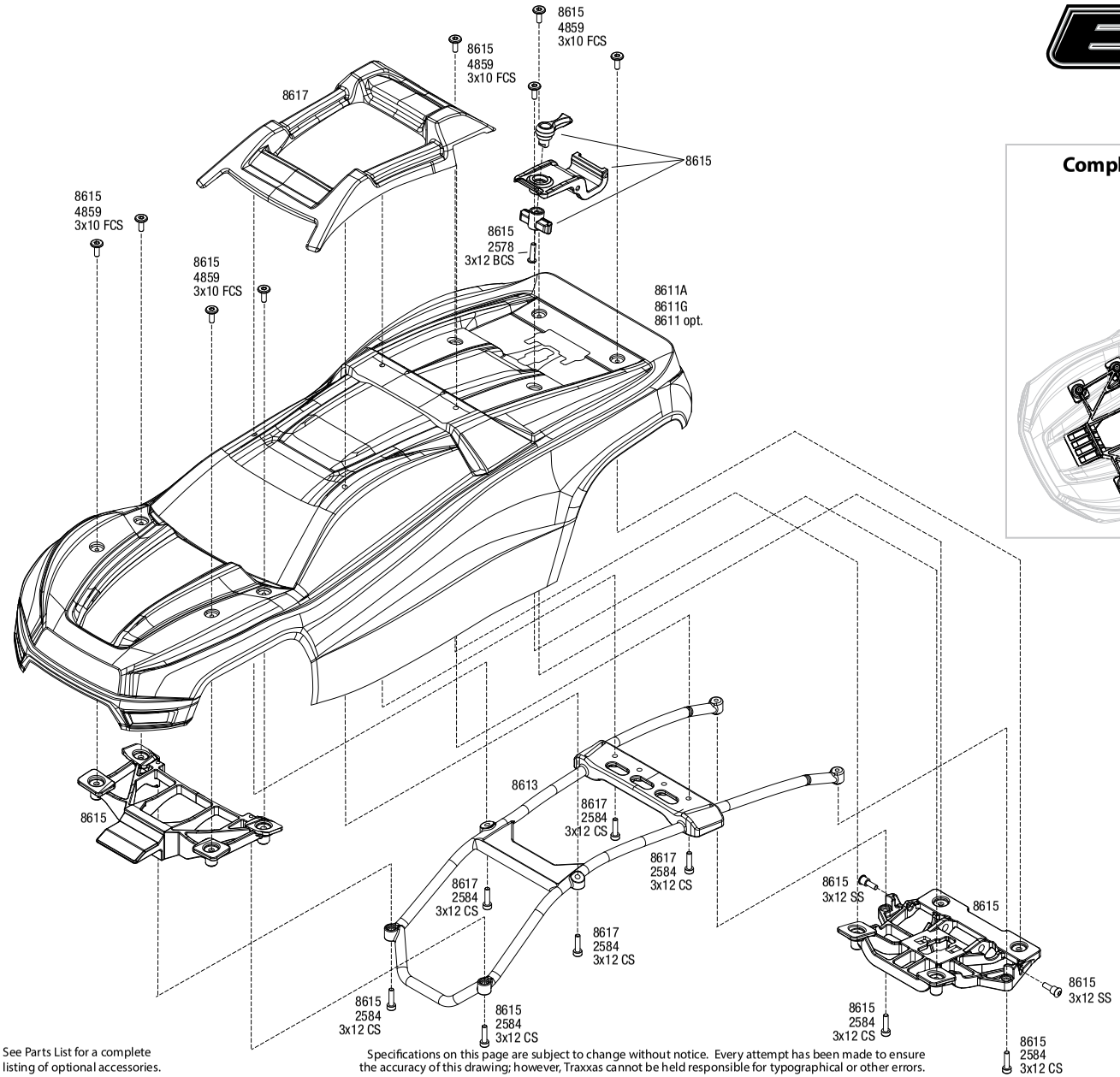

See Parts List for a complete listing of optional accessories.

Specifications on this page are subject to change without notice. Every attempt has been made to ensure the accuracy of this drawing; however, Traxxas cannot be held responsible for typographical or other errors.

REV 200612-R11

PARTS SHOWN IN BOLD ARE OPTIONAL ACCESSORIES.

Part categories and individual part listings are arranged alphabetically.

Bearings & Bushings

5107A Ball bearing, black rubber sealed (17x26x5mm) (2)
5120 Ball bearings, blue rubber sealed (12x18x4mm) (2)
5101 Ball bearings, blue rubber sealed (12x21x5mm) (2)
5116 Ball bearings, blue rubber sealed (5x11x4mm) (2)
5114 Ball bearings, blue rubber sealed (5x8x2.5mm) (2)
5180 Ball bearings, blue rubber sealed (6x13x5mm) (2)
5118 Ball bearings, blue rubber sealed (8x16x5mm) (2)

Body & Accessories

1926 Antenna caps, vinyl (2)/ antenna spool
5526 Antenna crimp nut, aluminum (blue-anodized)/ antenna nut tools
5526R Antenna crimp nut, aluminum (red-anodized)/ antenna nut tools
1726 Antenna, tube (1)/ vinyl antenna cap (1)/ wire retainer (1)
8615 Body mounts, front & rear/ 3x12mm CS (4)/ 3x12mm shoulder screw (2)/ 3x10mm flat-head machine screw (8)/ 3x12mm BCS (1)
8614 Body posts, clipless, front & rear (1 each)
8610 Body reinforcement set (fits #8611 body)
8613 Body support/ 3x12mm CS (4)
8611X Body, E-Revo, blue/ window, grille, lights decal sheet (assembled with front & rear body mounts and rear body support for clipless mounting)
8611T Body, E-Revo, purple/ window, grille, lights decal sheet (assembled with front & rear body mounts and rear body support for clipless mounting)
8611 Body, E-Revo® (clear, requires painting)/ window, grille, lights decal sheet
2514 Decal sheet, racing sponsors
9950 Official Team Traxxas® racing decal set (flag logo/ 6-color)
8617 Skid plate, roof (body)/ 3x12mm CS (4)
5185 Tires, rubber (2) (fits Traxxas® wheelie bar wheels)
4974 Wheelie bar arm (1)/ connector (1)/ 3x12 SS (hex drive) (4)
5473 Wheelie bar mount (1)(fits 1/10 scale Revo trucks)
5472 Wheelie bar, assembled (fits all 1/10th scale Revo trucks)
4976 Wheels (4)/ Axles (2), for wheelie bar
5413 Wing mount, center / wing washers (for Revo®)
8616 Wing mounts, low profile
5446 Wing, Revo® (black)/ decal sheet
5446G Wing, Revo® (Exo-Carbon finish)/ decal sheet
5412 Wing, Revo® (white)/ decal sheet

Bumpers & Skidplates

5335X Bumpers, front and rear (black chrome)
5315 Guards, steering servo (2)
8637 Skid plate set, front/ skid plate, rear/ 3x10 BCS (6)/ 3x30 BCS (1) (fits #8629 & 8630 bulkheads)
5637X Skidplate, transmission, nylon (black)/ cover

Chassis & Attachments

8615 Body mounts, front & rear/ 3x12mm CS (4)/ 3x12mm shoulder screw (2)/ 3x10mm flat-head machine screw (8)/ 3x12mm BCS (1)
5624 Box, receiver (sealed)/ foam pad/ silicone grease/ 3x8mm BCS (2)/ 2.5x8mm CS (2)/ 3x6mm BCS (2)
5323 Bulkhead tie bars, front & rear (blue-anodized aluminum)
5323R Bulkhead tie bars, front & rear (red-anodized aluminum)
8630 Bulkhead, front (upper and lower)/ 4x12mm BCS (6) (requires #8622 chassis)
8629 Bulkhead, rear (upper and lower)/ 4x12mm BCS (6) (requires #8622 chassis)
8620 Chassis supports, front & rear/ 3x12mm BCS (4)/ 3x15mm CS (4)/ 4x14mm BCS (1)
8622 Chassis, E-Revo® (requires #8629 & 8630 bulkheads)
5627 Door, battery compartment (2) (fits right or left side)
5315 Guards, steering servo (2)
5629 Retainer clip, battery (1)/ front clip (1) /rear clip (1)/ foam spacer (1) (for one battery compartment)
5625 Seal kit, receiver box (includes o-ring, seals, and silicone grease)
5317 Shock mounts (front & rear)/ wire clip (1)/ chassis wire clips (4)/ 3x32mm CS (4)/ 3x6mm BCS (1)
8637 Skid plate set, front/ skid plate, rear/ 3x10 BCS (6)/ 3x30 BCS (1) (fits #8629 & 8630 bulkheads)
5637X Skidplate, transmission, nylon (black)/ cover
5185 Tires, rubber (2) (fits Traxxas® wheelie bar wheels)
5628 Vent, battery compartment (includes latch) (1 pair, fits left or right side)
4974 Wheelie bar arm (1)/ connector (1)/ 3x12 SS (hex drive) (4)
5473 Wheelie bar mount (1)(fits 1/10 scale Revo trucks)
5472 Wheelie bar, assembled (fits all 1/10th scale Revo trucks)
4976 Wheels (4)/ axles (2) (for T-Maxx®/E-Maxx wheelie bar)

Cush Drive Components

6465 Cush drive key/ pin/ elastomer damper
6487X Gear, 15-T pinion (1.0 metric pitch) (fits 5mm shaft)/ set screw (for use only with steel spur gears)
6494X Gear, 20-T pinion (1.0 metric pitch) (fits 5mm shaft)/ set screw (for use only with steel spur gears)
7793X Housing, cush drive (front & rear halves)
6447 Spur gear, 46-tooth (1.0 metric pitch)
6448 Spur gear, 50-tooth (1.0 metric pitch)
6449 Spur gear, 54-tooth (1.0 metric pitch)

Differential Components

5118 Ball bearings, blue rubber sealed (8x16x5mm) (2)
8681X Carrier, differential (aluminum)/ x-ring gaskets (2)/ ring gear gasket/ spacers (4)/ 12.2x18x0.5 metal washer
8681 Carrier, differential (heavy duty)/ x-ring gaskets (2)/ ring gear gasket/ spacers (4)/ 12.2x18x0.5 PTFE-coated washer (1)
8680 Differential gasket/ x-rings (2)/ 12.2x18x0.5 metal washer (1)/ 12.2x18x0.5 PTFE-coated washer (1)
5136X Differential oil kit (1 each: 10K, 30K, 50K weights)
8682 Gear set, differential (spider gears (4), spider gear shaft (2))
5130 Oil, differential (100K wt) (0.7 oz (20cc))
5135 Oil, differential (10K wt)
5040 Oil, differential (20M wt) (standard)
5136 Oil, differential (30K wt)
5137 Oil, differential (50K wt)
8684 Output gear, center differential, hardened steel (2)
8683 Output gears, differential, hardened steel (2)
8679 Ring gear, differential/ pinion gear, differential

Driveline Components

8635 Axle carriers, left & right (1 each) (use with 8x16mm & 17x26mm ball bearings)/ dust boot retainers (4)
8652 Drive cup, machined steel (2)/ 4x17mm screw pins (2)
8650 Driveshaft, steel constant-velocity (heavy duty, shaft only, 122.5mm)
8655R Driveshafts, center E-Revo® (steel constant-velocity) front (1)/ rear (1) (assembled with inner and outer dust boots, for E-Revo)
5150 E-clips, 1.5mm (24)
8655 Half shafts, center (internal splined (2)/ external splined (2)) (plastic parts only)
8651 Rebuild kit, driveshaft (cross pin (2)/ 16mm pin (2)) (metal parts for 2 driveshafts)
5145 Screw pin, 4x15mm (6)
8653 Stub axle
5452 U-joints, driveshaft (carrier (4)/ 4.5mm cross pin (4)/ 3mm cross pin (4)/ e-clips (20)) (metal parts for 2 driveshafts)
8654 Wheel hubs, splined, 17mm (blue-anodized) (4)/ 4x5 GS (4)/ 3x14mm pin (4)
8654G Wheel hubs, splined, 17mm (green-anodized) (4)/ 4x5 GS (4)/ 3x14mm pin (4)
8654A Wheel hubs, splined, 17mm (orange-anodized) (4)/ 4x5 GS (4)/ 3x14mm pin (4)
8654R Wheel hubs, splined, 17mm (red-anodized) (4)/ 4x5 GS (4)/ 3x14mm pin (4)
7758A Wheel nuts, splined, 17mm, serrated (black-anodized) (4)
7758 Wheel nuts, splined, 17mm, serrated (blue-anodized) (4)
7758G Wheel nuts, splined, 17mm, serrated (green-anodized) (4)
7758T Wheel nuts, splined, 17mm, serrated (orange-anodized) (4)
7758R Wheel nuts, splined, 17mm, serrated (red-anodized) (4)
8658 Yokes, transmission (2)/ 4x15mm screw pins (2)

Front Suspension

8635 Axle carriers, left & right (1 each) (use with 8x16mm & 17x26mm ball bearings)/ dust boot retainers (4)
5323 Bulkhead tie bars, front & rear (blue-anodized aluminum)
5323R Bulkhead tie bars, front & rear (red-anodized aluminum)
8630 Bulkhead, front (upper and lower)/ 4x12mm BCS (6) (requires #8622 chassis)
5134 Caster spacers (4)/ shims (4)
5378X Pivot ball caps (4)/ dust boots, rubber (4)/ dust plugs, rubber (4)/ dust boot retainers, black (4), blue (4) (2 pkgs. req. to complete truck)
4933 Pivot balls (4)/ pivot ball cap bushings (4)
4933X Pivot balls, hard-anodized 7075-T6 aluminum (4)/ pivot ball cap bushings (4)
8619 Push rods (steel), heavy duty (2) (assembled with rod ends)
8619X Push rods, aluminum (blue-anodized), heavy duty (2) (assembled with rod ends and threaded inserts)

E-REVO® (86086-4)

8619G	**Push rods, aluminum (green-anodized), heavy duty (2) (assembled with rod ends and threaded inserts)**
8619R	**Push rods, aluminum (red-anodized), heavy duty (2) (assembled with rod ends and threaded inserts)**
5354X	**Rocker arm post (aluminum) (4)**
5354	Rocker arm post (steel) (2)
5358	Rocker arm set, progressive-2 (90-T)/ spacers (red aluminum) (8)
8647X	Rod ends, heavy duty (push rod) (8) (assembled with hollow balls) (replacement ends for #8619, 8619G, 8619R, 8619X)
8646	Rod ends, heavy duty (toe links) (8) (assembled with hollow balls)
8632X	**Suspension arms, blue, front (left), heavy duty (upper (1)/ lower (1))**
8631X	**Suspension arms, blue, front (right), heavy duty (upper (1)/ lower (1))**
8632	Suspension arms, front (left), heavy duty (upper (1)/ lower (1))
8631	Suspension arms, front (right), heavy duty (upper (1)/ lower (1))
8632G	**Suspension arms, green, front (left), heavy duty (upper (1)/ lower (1))**
8631G	**Suspension arms, green, front (right), heavy duty (upper (1)/ lower (1))**
8632T	**Suspension arms, orange, front (left), heavy duty (upper (1)/ lower (1))**
8631T	**Suspension arms, orange, front (right), heavy duty (upper (1)/ lower (1))**
8632R	**Suspension arms, red, front (left), heavy duty (upper (1)/ lower (1))**
8631R	**Suspension arms, red, front (right), heavy duty (upper (1)/ lower (1))**
8632A	**Suspension arms, white, front (left), heavy duty (upper (1)/ lower (1))**
8631A	**Suspension arms, white, front (right), heavy duty (upper (1)/ lower (1))**
5321	Suspension pin set (front or rear, hardened steel), 3x20mm (4), 3x40mm (2))
8638	Toe link, 5.0mm steel (front or rear) (2)
8638X	**Toe links, E-Revo® VXL (TUBES blue-anodized, 7075-T6 aluminum, stronger than titanium) (144mm) (2)/ rod ends, assembled with steel hollow balls (8)/ aluminum wrench, 10mm (1)**
8638G	**Toe links, E-Revo® VXL (TUBES green-anodized, 7075-T6 aluminum, stronger than titanium) (144mm) (2)/ rod ends, assembled with steel hollow balls (8)/ aluminum wrench, 10mm (1)**
8638R	**Toe links, E-Revo® VXL (TUBES red-anodized, 7075-T6 aluminum, stronger than titanium) (144mm) (2)/ rod ends, assembled with steel hollow balls (8)/ aluminum wrench, 10mm (1)**

Hardware

5150	E-clips, 1.5mm (24)
5477	Flat wrench, 5mm (blue-anodized aluminum)
5478	**Flat wrench, 8mm (blue-anodized aluminum)**
3980	**Glow plug wrench (universal wrench)**
2586	Head screws, 3x15mm cap-head machine (hex drive) (6) (TRX 2.5)
5476X	Hex wrenches; 1.5mm, 2mm, 2.5mm, 3mm, 2.5mm ball
5475	Multi-tool (plastic)
5144	Screw pin, 2.5x18mm (6)
5145	Screw pin, 4x15mm (6)
3236	Screws, 2.5x12mm cap-head machine (6)
3965	Screws, 2.5x8mm cap-head machine (6)
2577	Screws, 3x10mm button-head machine (hex drive) (6)
2587	Screws, 3x10mm cap-head machine (6) (no washer)
2551	Screws, 3x10mm countersunk machine (6) (hex drive)
5282	Screws, 3x12mm button-head machine (6) (starter attachment screws with threadlock)
2578	Screws, 3x12mm button-head machine (hex drive) (6)
2552	Screws, 3x12mm countersunk machine (6) (hex drive)
2579	Screws, 3x15mm button-head machine (hex drive) (6)
2553	Screws, 3x15mm countersunk machine (6) (hex drive)
2581	Screws, 3x25mm button-head machine (hex drive) (6)
2582	Screws, 3x30mm button-head machine (hex drive) (6)
3971	Screws, 3x35mm cap-head machine (hex drive) (6)
2575	Screws, 3x6mm button-head machine (hex drive) (6)
2576	Screws, 3x8mm button-head machine (hex drive) (6)
3936	Screws, 4x10mm button-head machine (hex drive) (6)
3937	Screws, 4x12mm button-head machine (hex drive) (6)
3938	Screws, 4x14mm button-head machine (hex drive) (6)
3929	Screws, 4x18mm button-head machine (hex drive) (6)
3939	Screws, 4x6mm button-head machine (hex drive) (with threadlock) (6)
4897	Screws, set (grub) 4mm (6) (with threadlock)

Motors & Electronics

3475	Cooling fan, Velineon® VXL ESC (fits VXL-6s & VXL-8s)
2072A	Gear set (for 2070, 2075 servos)
2252	**Gear set, metal (for 2250, 2255 servos)**
2072R	**Gear set, metal, high speed (for 2070, 2075 servos)**
8661	Motor mount hinge post/ fixed gear adapter/ 5x25mm BCS (1)/ 4x16mm CS with split and flat washer (1)
5660	Motor mount, finned aluminum
3481	Motor, 2200Kv 75mm, brushless (with 6.5mm gold-plated connectors & high-efficiency heatsink)
8690	Plate, motor
2254	**Servo case, aluminum (blue-anodized) (middle) (for 2250 servo)**
2253	**Servo case, aluminum (red-anodized) (middle) (for 2255 servo)**
2251	**Servo case, plastic (top, middle, bottom)/ gaskets/ hardware (for 2250, 2255 servos)**
2074	Servo case/gaskets (for 2056 and 2075 waterproof servos)
2075R	**Servo, digital high-speed, metal gear (ball bearing), waterproof**
2075	Servo, digital high-torque (ball bearing), waterproof
2250	**Servo, digital high-torque 330 coreless, metal gear (ball bearing), waterproof**
2255	**Servo, digital high-torque 400 brushless, metal gear (ball bearing), waterproof**
2075X	**Servo, digital high-torque, metal gear (ball bearing), waterproof**
3480	Velineon® VXL-6s Brushless Power System, waterproof (includes VXL-6s ESC and 2200Kv, 75mm motor)
3485	Velineon® VXL-6s Electronic Speed Control, waterproof (brushless) (fwd/rev/brake)

Radio System, Batteries & Chargers

2872X	**5000mAh 11.1v 3-Cell 25C LiPo Battery**
2842X	**5000mAh 7.4v 2-Cell 25C LiPo Battery**
2843X	**5800mAh 7.4v 2-Cell 25C LiPo Battery**
2869X	**7600mAh 7.4v 2-Cell 25C LiPo Battery**
2976	**AC to DC converter, 40W**
2938X	**Adapter, Traxxas® iD® LiPo battery (adapts Traxxas iD batteries to separate balance ports)**
5526	Antenna crimp nut, aluminum (blue-anodized)/ antenna nut tools
5526R	**Antenna crimp nut, aluminum (red-anodized)/ antenna nut tools**
1726	Antenna, tube (1)/ vinyl antenna cap (1)/ wire retainer (1)
2943	**Battery charge indicators (green (4), blue (4), grey (4))**
6548	Battery door, transmitter (replacement for #6516, 6517, 6528, 6529, 6530 transmitters)
2914	**Battery, Power Cell AA Alkaline (4)**
2991	**Battery/charger completer pack (includes #2972 Dual iD® charger (1), #2869X 7600mAh 7.4V 2-cell 25C LiPo battery (2))**
2990	**Battery/charger completer pack (includes #2972 Dual iD® charger (1), #2872X 5000mAh 11.1V 3-cell 25C LiPo battery (2))**
2972	**Charger, EZ-Peak® Dual, 100W, NiMH/LiPo with iD® Auto Battery Identification**
2973	**Charger, EZ-Peak® Live Dual, 200W, NiMH/LiPo with iD® Auto Battery Identification**
2971	**Charger, EZ-Peak® Live, 100W, NiMH/LiPo with iD® Auto Battery Identification**
2970	**Charger, EZ-Peak® Plus, 4 amp, NiMH/LiPo with iD® Auto Battery Identification**
5632	**Chassis brace, rear (fits E-Revo®/Summit)**
6525	**Communication link, telemetry expander**
6566	**Data link, telemetry expander (connects #6550X telemetry expander 2.0 to the #3485 VXL-6s or #3496 VXL-8s electronic speed control)**
2978	**Fuse, charger, 5A (2) (for #2974, 2975, 2977)**
2072A	Gear set (for 2070, 2075 servos)
2252	**Gear set, metal (for 2250, 2255 servos)**
2072R	**Gear set, metal, high speed (for 2070, 2075 servos)**
2968X	**LiPo cell voltage checker/balancer (includes #2938X adapter for Traxxas® iD® batteries)**
2968	**LiPo cell voltage checker/balancer (requires #2938X adapter for Traxxas® iD® batteries)**
6556	**Mount, telemetry expander (fits XO-1®, E-Revo®*, Summit*, all T-Maxx®/E-Maxx® trucks, Revo® 3.3, Slayer Pro 4X4) (*requires rear chassis brace #5632)**
6535	**Mount, temperature sensor (electric motors)/ wire tie/ thermal pad**
6533	Receiver, micro, TQi 2.4GHz with telemetry & TSM (5-channel)
6552	**Seal kit, expander box (includes o-ring, seals, and silicone grease)**
6526	**Sensor, auto-detectable, temperature**
6527	**Sensor, auto-detectable, voltage**
6521	**Sensor, temperature and voltage (long)**
2254	**Servo case, aluminum (blue-anodized) (middle) (for 2250 servo)**

REV. 200701 0941

2253 **Servo case, aluminum (red-anodized) (middle) (for 2255 servo)**
2251 **Servo case, plastic (top, middle, bottom)/ gaskets/ hardware (for 2250, 2255 servos)**
2074 Servo case/gaskets (for 2056 and 2075 waterproof servos)
2075R **Servo, digital high-speed, metal gear (ball bearing), waterproof**
2075 Servo, digital high-torque (ball bearing), waterproof
2250 **Servo, digital high-torque 330 coreless, metal gear (ball bearing), waterproof**
2255 **Servo, digital high-torque 400 brushless, metal gear (ball bearing), waterproof**
2075X **Servo, digital high-torque, metal gear (ball bearing), waterproof**
6553X **Telemetry expander 2.0 and GPS module 2.0, TQi radio system**
6550X **Telemetry expander 2.0, TQi radio system (for use only with #6551X GPS module)**
6551X **Telemetry GPS module 2.0, TQi radio system (for use only with #6550X telemetry expander)**
6509R TQi 2.4 GHz High Output radio system, 2-channel, Traxxas Link™ enabled, TSM (2-ch transmitter, 5-ch micro receiver)
6507R **TQi 2.4 GHz High Output radio system, 4-channel with Traxxas Link™ Wireless Module, TSM (4-ch transmitter, 5-ch micro receiver)**
6528 Transmitter, TQi Traxxas Link™ enabled, 2.4GHz high output, 2-channel (transmitter only)
6529 **Transmitter, TQi Traxxas Link™ enabled, 2.4GHz high output, 3-channel (transmitter only)**
6530 **Transmitter, TQi Traxxas Link™ enabled, 2.4GHz high output, 4-channel (transmitter only)**
6511 **Traxxas Link™ Wireless Module**

Ready-To-Race Model

86086-4 E-Revo® VXL Brushless: 1/10 Scale 4WD Brushless Electric Monster Truck with TQi 2.4GHz Traxxas Link™ Enabled Radio System and Traxxas Stability Management (TSM)®

Rear Suspension

8635 Axle carriers, left & right (1 each) (use with 8x16mm & 17x26mm ball bearings)/ dust boot retainers (4)
5323 Bulkhead tie bars, front & rear (blue-anodized aluminum)
5323R **Bulkhead tie bars, front & rear (red-anodized aluminum)**
8629 Bulkhead, rear (upper and lower)/ 4x12mm BCS (6) (requires #8622 chassis)
5378X Pivot ball caps (4)/ dust boots, rubber (4)/ dust plugs, rubber (4)/ dust boot retainers, black (4), blue (4) (2 pkgs. req. to complete truck)
4933 Pivot balls (4)/ pivot ball cap bushings (4)
4933X **Pivot balls, hard-anodized 7075-T6 aluminum (4)/ pivot ball cap bushings (4)**
8619 Push rods (steel), heavy duty (2) (assembled with rod ends)
8619X **Push rods, aluminum (blue-anodized), heavy duty (2) (assembled with rod ends and threaded inserts)**
8619G **Push rods, aluminum (green-anodized), heavy duty (2) (assembled with rod ends and threaded inserts)**
8619R **Push rods, aluminum (red-anodized), heavy duty (2) (assembled with rod ends and threaded inserts)**
5354X **Rocker arm post (aluminum) (4)**
5354 Rocker arm post (steel) (2)
5358 Rocker arm set, progressive-2 (90-T)/ spacers (red aluminum) (8)
8647X Rod ends, heavy duty (push rod) (8) (assembled with hollow balls) (replacement ends for #8619, 8619G, 8619R, 8619X)
8646 Rod ends, heavy duty (toe links) (8) (assembled with hollow balls)
8634X **Suspension arms, blue, rear (left), heavy duty, adjustable wheelbase (upper (1)/ lower (1))**
8633X **Suspension arms, blue, rear (right), heavy duty, adjustable wheelbase (upper (1)/ lower (1))**
8634G **Suspension arms, green, rear (left), heavy duty, adjustable wheelbase (upper (1)/ lower (1))**
8633G **Suspension arms, green, rear (right), heavy duty, adjustable wheelbase (upper (1)/ lower (1))**
8634T **Suspension arms, orange, rear (left), heavy duty, adjustable wheelbase (upper (1)/ lower (1))**
8633T **Suspension arms, orange, rear (right), heavy duty, adjustable wheelbase (upper (1)/ lower (1))**
8634 Suspension arms, rear (left), heavy duty, adjustable wheelbase (upper (1)/ lower (1))
8633 Suspension arms, rear (right), heavy duty, adjustable wheelbase (upper (1)/ lower (1))
8634R **Suspension arms, red, rear (left), heavy duty, adjustable wheelbase (upper (1)/ lower (1))**
8633R **Suspension arms, red, rear (right), heavy duty, adjustable wheelbase (upper (1)/ lower (1))**
8634A **Suspension arms, white, rear (left), heavy duty, adjustable wheelbase (upper (1)/ lower (1))**
8633A **Suspension arms, white, rear (right), heavy duty, adjustable wheelbase (upper (1)/ lower (1))**
5321 Suspension pin set (front or rear, hardened steel), 3x20mm (4), 3x40mm (2))
8638 Toe link, 5.0mm steel (front or rear) (2)
8638X **Toe links, E-Revo® VXL (TUBES blue-anodized, 7075-T6 aluminum, stronger than titanium) (144mm) (2)/ rod ends, assembled with steel hollow balls (8)/ aluminum wrench, 10mm (1)**
8638G **Toe links, E-Revo® VXL (TUBES green-anodized, 7075-T6 aluminum, stronger than titanium) (144mm) (2)/ rod ends, assembled with steel hollow balls (8)/ aluminum wrench, 10mm (1)**
8638R **Toe links, E-Revo® VXL (TUBES red-anodized, 7075-T6 aluminum, stronger than titanium) (144mm) (2)/ rod ends, assembled with steel hollow balls (8)/ aluminum wrench, 10mm (1)**

Shocks (GTR)

5466X **Body, GTR shock (hard-anodized, PTFE-coated aluminum) (1)**
5465 Caps and spring retainers, GTR shock (upper cap (2)/ hollow balls (2)/ bottom cap (2)/ upper retainer (2)/ lower retainer (2))
5475 Multi-tool (plastic)
5158 Nuts, 2.5mm nylon locking (12)
5462 Rebuild kit, GTR shock (x-rings, bump stops, bladders, all pistons, piston nuts, shock rod ends) renews 2 shocks
5469 Rod ends (GTR shocks) (6)
5463 Shaft, GTR shock (2) (stainless)
5463T **Shaft, GTR shock, TiN-coated (2)**
5460 Shocks, GTR aluminum (assembled) (2) (without springs)
5460A **Shocks, GTR aluminum, blue-anodized (fully assembled w/o springs) (4)**
5460R **Shocks, GTR aluminum, red-anodized (fully assembled w/o springs) (4)**
5460X **Shocks, GTR hard-anodized, PTFE-coated aluminum bodies with TiN shafts (fully assembled w/o springs) (4)**
5461 **Variable damping kit, GTR shocks (includes #1, #2, #3 pistons and stainless steel valves)**

Springs

5435 **Spring, shock (red) (GTR) (2.6 rate yellow) (1 pair)**
5436 **Spring, shock (red) (GTR) (2.9 rate white) (1 pair)**
5437 **Spring, shock (red) (GTR) (3.2 rate orange) (1 pair)**
5438 **Spring, shock (red) (GTR) (3.5 rate green) (1 pair)**
5439 Spring, shock (red) (GTR) (3.8 rate gold) (1 pair)
5440 Spring, shock (red) (GTR) (4.1 rate tan) (1 pair)
5441 **Spring, shock (red) (GTR) (4.4 rate black) (1 pair)**
5442 **Spring, shock (red) (GTR) (4.9 rate silver) (std. front 120mm) (1 pair)**
5444 **Spring, shock (red) (GTR) (5.9 rate blue) (std. rear 120mm) (1 pair)**
5445 **Spring, shock (red) (GTR) (6.4 rate purple) (1 pair)**
5443 **Spring, shock red (GTR) (5.4 rate pink) (1 pair)**

Spur Gears & Pinion Gears

6484X **Gear, 11-T pinion (1.0 metric pitch) (fits 5mm shaft)/ set screw (for use only with steel spur gears)**
6485X **Gear, 12-T pinion (1.0 metric pitch) (fits 5mm shaft)/ set screw (for use only with steel spur gears)**
6486X **Gear, 13-T pinion (1.0 metric pitch) (fits 5mm shaft)/ set screw (for use only with steel spur gears)**
6488X **Gear, 14-T pinion (1.0 metric pitch) (fits 5mm shaft)/ set screw (for use only with steel spur gears)**
6487X Gear, 15-T pinion (1.0 metric pitch) (fits 5mm shaft)/ set screw (for use only with steel spur gears)
6489X **Gear, 16-T pinion (1.0 metric pitch) (fits 5mm shaft)/ set screw (for use only with steel spur gears)**
6490X **Gear, 17-T pinion (1.0 metric pitch) (fits 5mm shaft)/ set screw (for use only with steel spur gears)**
6491X **Gear, 18-T pinion (1.0 metric pitch) (fits 5mm shaft)/ set screw (for use only with steel spur gears)**
6491R **Gear, 18-T pinion (machined) (1.0 metric pitch) (fits 5mm shaft)/ set screw (for use only with steel spur gears)**
6494X **Gear, 20-T pinion (1.0 metric pitch) (fits 5mm shaft)/ set screw (for use only with steel spur gears)**
6447 **Spur gear, 46-tooth (1.0 metric pitch)**
6447R **Spur gear, 46-tooth, steel (wide-face, 1.0 metric pitch)**
6448 **Spur gear, 50-tooth (1.0 metric pitch)**
6448R **Spur gear, 50-tooth, steel (wide-face, 1.0 metric pitch)**
6449 Spur gear, 54-tooth (1.0 metric pitch)
6449X **Spur gear, 54-tooth, steel (1.0 metric pitch)**
6449R **Spur gear, 54-tooth, steel (wide-face, 1.0 metric pitch)**

E-REVO® (86086-4)

Steering Components

2072A Gear set (for 2070, 2075 servos)
2072R Gear set, metal, high speed (for 2070, 2075 servos)
5355X Hollow ball set, aluminum (30)/ tall centered hollow ball (2)/ tall offset hollow ball (2)/ bump steer adjustment shims; 3.5mm (2), 1.17mm (2)
5355 Hollow ball, tall centered (2)/ tall offset hollow ball (2)/ bump steer adjustment shims; 3.5mm (2), 1.17mm (2)
5343X Mount, steering arm/ steering stops (2) (lower hinge pin retainer) (includes standard and maximum throw steering stops)
5469 Rod ends (GTR shocks) (6)
8646 Rod ends, heavy duty (toe links) (8) (assembled with hollow balls)
5349 Rod ends, small, with hollow balls (6) (for Revo® steering linkage)
5345X Servo horns, steering and throttle (for non-Traxxas® servos (Hitec, JR, KO, Airtronics))
5345R Servo horns, steering, long (2), short (2)/ linkage, steering (3x20mm turnbuckle) (2)/ rod ends (short) (4)/ hollow balls (4)
5344X Servo saver spring, heavy duty (for use with metal-gear servos)
2075R Servo, digital high-speed, metal gear (ball bearing), waterproof
2075 Servo, digital high-torque (ball bearing), waterproof
2075X Servo, digital high-torque, metal gear (ball bearing), waterproof
5344 Steering arm (upper & lower)/ servo saver/ servo saver spring/ steering arm shaft
8638 Toe link, 5.0mm steel (front or rear) (2)
8638X Toe links, E-Revo® VXL (TUBES blue-anodized, 7075-T6 aluminum, stronger than titanium) (144mm) (2)/ rod ends, assembled with steel hollow balls (8)/ aluminum wrench, 10mm (1)
8638G Toe links, E-Revo® VXL (TUBES green-anodized, 7075-T6 aluminum, stronger than titanium) (144mm) (2)/ rod ends, assembled with steel hollow balls (8)/ aluminum wrench, 10mm (1)
8638R Toe links, E-Revo® VXL (TUBES red-anodized, 7075-T6 aluminum, stronger than titanium) (144mm) (2)/ rod ends, assembled with steel hollow balls (8)/ aluminum wrench, 10mm (1)

Suspension Linkage

5355X Hollow ball set, aluminum (30)/ tall centered hollow ball (2)/ tall offset hollow ball (2)/ bump steer adjustment shims; 3.5mm (2), 1.17mm (2)
5355 Hollow ball, tall centered (2)/ tall offset hollow ball (2)/ bump steer adjustment shims; 3.5mm (2), 1.17mm (2)
8619 Push rods (steel), heavy duty (2) (assembled with rod ends)
8619X Push rods, aluminum (blue-anodized), heavy duty (2) (assembled with rod ends and threaded inserts)
8619G Push rods, aluminum (green-anodized), heavy duty (2) (assembled with rod ends and threaded inserts)
8619R Push rods, aluminum (red-anodized), heavy duty (2) (assembled with rod ends and threaded inserts)
5469 Rod ends (GTR shocks) (6)
8647X Rod ends, heavy duty (push rod) (8) (assembled with hollow balls) (replacement ends for #8619, 8619G, 8619R, 8619X)
8646 Rod ends, heavy duty (toe links) (8) (assembled with hollow balls)
5345R Servo horns, steering, long (2), short (2)/ linkage, steering (3x20mm turnbuckle) (2)/ rod ends (short) (4)/ hollow balls (4)
5321 Suspension pin set (front or rear, hardened steel), 3x20mm (4), 3x40mm (2))
8638 Toe link, 5.0mm steel (front or rear) (2)
8638X Toe links, E-Revo® VXL (TUBES blue-anodized, 7075-T6 aluminum, stronger than titanium) (144mm) (2)/ rod ends, assembled with steel hollow balls (8)/ aluminum wrench, 10mm (1)
8638G Toe links, E-Revo® VXL (TUBES green-anodized, 7075-T6 aluminum, stronger than titanium) (144mm) (2)/ rod ends, assembled with steel hollow balls (8)/ aluminum wrench, 10mm (1)
8638R Toe links, E-Revo® VXL (TUBES red-anodized, 7075-T6 aluminum, stronger than titanium) (144mm) (2)/ rod ends, assembled with steel hollow balls (8)/ aluminum wrench, 10mm (1)

Team Traxxas Items

2514 Decal sheet, racing sponsors
6160X DVD, Maxx® Power! Full Throttle Action (sleeve)
9950 Official Team Traxxas® racing decal set (flag logo/ 6-color)
9909 Traxxas® racing banner, red & black (3x7 feet)

Tires & Wheels

8674 Tires & wheels, assembled, glued (black 3.8" wheels, paddle tires, foam inserts) (2) (TSM rated)
8672 Tires & wheels, assembled, glued (black wheels, Talon EXT tires, foam inserts) (2) (17mm splined) (TSM rated)
8672G Tires & wheels, assembled, glued (green wheels, Talon EXT tires, foam inserts) (2) (17mm splined) (TSM rated)
8672A Tires & wheels, assembled, glued (orange wheels, Talon EXT tires, foam inserts) (2) (17mm splined) (TSM rated)
4983A Tires & wheels, assembled, glued (SS (Split Spoke) black chrome wheels, Maxx® tires (6.3" outer diameter), foam inserts) (2) (use with 17mm splined wheel hubs & nuts, part #5353X) (fits Revo®/T-Maxx®/E-Maxx) (TSM rated)
5670 Tires, Canyon AT 3.8" (2)/ foam inserts (2)
4973 Tires, Maxx® 3.8" (6.3" outer diameter (160mm)) (2) (fits Revo®/T-Maxx®/E-Maxx)
5171 Tires, Maxx® Chevron 3.8" (2) (fits Revo®/T-Maxx®/E-Maxx)
8673 Tires, paddle 3.8" (2)/ foam inserts (2)
5375 Tires, Response Pro 3.8" (soft-compound, narrow profile, short knobby design)/ foam inserts (2)
5471 Tires, Response racing 3.8" (soft-compound, narrow profile, short knobby design)/ foam inserts (2)
5470 Tires, SportTraxx racing 3.8" (soft compound, directional and asymmetrical tread design)/ foam inserts (2)
8670 Tires, Talon EXT 3.8" (2)/ foam inserts (2)
8654 Wheel hubs, splined, 17mm (blue-anodized) (4)/ 4x5 GS (4)/ 3x14mm pin (4)
8654G Wheel hubs, splined, 17mm (green-anodized) (4)/ 4x5 GS (4)/ 3x14mm pin (4)
8654A Wheel hubs, splined, 17mm (orange-anodized) (4)/ 4x5 GS (4)/ 3x14mm pin (4)
8654R Wheel hubs, splined, 17mm (red-anodized) (4)/ 4x5 GS (4)/ 3x14mm pin (4)
7758A Wheel nuts, splined, 17mm, serrated (black-anodized) (4)
7758 Wheel nuts, splined, 17mm, serrated (blue-anodized) (4)
7758G Wheel nuts, splined, 17mm, serrated (green-anodized) (4)
7758T Wheel nuts, splined, 17mm, serrated (orange-anodized) (4)
7758R Wheel nuts, splined, 17mm, serrated (red-anodized) (4)
8671 Wheels, 3.8" (black) (2) (17mm splined)
8671G Wheels, 3.8" (green) (2) (17mm splined)
8671A Wheels, 3.8" (orange) (2) (17mm splined)

Transmission Components

5116 Ball bearings, blue rubber sealed (5x11x4mm) (2)
8681X Carrier, differential (aluminum)/ x-ring gaskets (2)/ ring gear gasket/ spacers (4)/ 12.2x18x0.5 metal washer
8677 Cover, gear/ 3x12mm CS (1)
6465 Cush drive key/ pin/ elastomer damper
8682 Gear set, differential (spider gears (4), spider gear shaft (2))
8691 Gearbox halves (front & rear)/ idler gear shaft
5041 Grease, premium high performance (20cc)
7793X Housing, cush drive (front & rear halves)
8692 Input shaft/ idler gear
8661 Motor mount hinge post/ fixed gear adapter/ 5x25mm BCS (1)/ 4x16mm CS with split and flat washer (1)
5660 Motor mount, finned aluminum
8685 Output gear, 36-tooth, metal
8684 Output gear, center differential, hardened steel (2)
8690 Plate, motor
3965 Screws, 2.5x8mm cap-head machine (6)
2552 Screws, 3x12mm countersunk machine (6) (hex drive)
1647 Silicone grease

Traxxas Tools

3433X Body reamer (aluminum handle)
3433 Body reamer (plastic handle)
3436 Cap, body reamer
3432 Scissors, curved tip
3431 Scissors, straight tip
8712 Speed Bit Essentials Set, hex and nut driver, 7-piece, includes premium handle (medium), travel pouch, hex drivers (straight: 1.5mm, 2.0mm, 2.5mm) and nut drivers (5.0mm, 5.5mm, 7.0mm, and 8.0mm), 1/4" drive
8721 Speed bit handle, medium (one piece)
8720 Speed bit handle, premium, large (rubber overmold)
8722 Speed bit handle, premium, medium (rubber overmold)
8710 Speed Bit Master Set, hex and nut driver, 13-piece, includes premium handle (medium), travel pouch, hex drivers (straight: 1.5mm, 2.0mm, 2.5mm, 3.0mm), (ball-end: 2.0mm, 2.5mm, 3.0mm), and nut drivers (4.00mm, 4.50mm, 5.00mm, 5.50mm, 7.00mm, 8.00mm),
8711 Speed Bit Master Set, hex driver, 7-piece straight and ball end, includes premium handle (medium), travel pouch, hex drivers (straight: 1.5mm, 2.0mm, 2.5mm, 3.0mm) (ball end: 2.0mm, 2.5mm, 3.0mm), 1/4" drive
8719 Speed Bit Master Set, nut driver, 6-piece, includes premium handle (medium), travel pouch, and nut drivers (4.0mm, 4.5mm, 5.0mm, 5.5mm, 7.0mm, 8.0mm), 1/4" drive
8716 Speed Bit Set, hex driver, 2-piece ball-end (2.0mm, 2.5mm), 1/4" drive

REV. 200701 0941

8716X	**Speed Bit Set, hex driver, 3-piece ball-end (2.0mm, 2.5mm, 3.0mm), 1/4" drive**
8715	**Speed Bit Set, hex driver, 3-piece straight (1.5mm, 2.0mm, 2.5mm), 1/4" drive**
8715X	**Speed Bit Set, hex driver, 4-piece straight (1.5mm, 2.0mm, 2.5mm, 3.0mm), 1/4" drive**
3415	**Tool set with pouch (includes 1.5mm, 2.0mm, 2.5mm, 3.0mm, 3.5mm, 4mm drivers/ 4mm, 5mm, 5.5mm, 7mm and 8mm nut drivers/ 2mm, 4mm, and 5mm slotted screwdrivers/ #00 Phillips, #0 Phillips, and #1 Phillips screwdrivers/ 4mm and 8mm wrench/ driver handle**

Turnbuckles & Threaded Rods

5477	Flat wrench, 5mm (blue-anodized aluminum)
5341	Linkage, steering (Revo® 3.3) (3x50mm Turnbuckle) (2)/ rod ends (short) (4)/ hollow balls (4)
8619	Push rods (steel), heavy duty (2) (assembled with rod ends)
8619X	**Push rods, aluminum (blue-anodized), heavy duty (2) (assembled with rod ends and threaded inserts)**
8619G	**Push rods, aluminum (green-anodized), heavy duty (2) (assembled with rod ends and threaded inserts)**
8619R	**Push rods, aluminum (red-anodized), heavy duty (2) (assembled with rod ends and threaded inserts)**
8647X	Rod ends, heavy duty (push rod) (8) (assembled with hollow balls) (replacement ends for #8619, 8619G, 8619R, 8619X)
8646	Rod ends, heavy duty (toe links) (8) (assembled with hollow balls)
8638	Toe link, 5.0mm steel (front or rear) (2)
8638X	**Toe links, E-Revo® VXL (TUBES blue-anodized, 7075-T6 aluminum, stronger than titanium) (144mm) (2)/ rod ends, assembled with steel hollow balls (8)/ aluminum wrench, 10mm (1)**
8638G	**Toe links, E-Revo® VXL (TUBES green-anodized, 7075-T6 aluminum, stronger than titanium) (144mm) (2)/ rod ends, assembled with steel hollow balls (8)/ aluminum wrench, 10mm (1)**
8638R	**Toe links, E-Revo® VXL (TUBES red-anodized, 7075-T6 aluminum, stronger than titanium) (144mm) (2)/ rod ends, assembled with steel hollow balls (8)/ aluminum wrench, 10mm (1)**

If you have questions or need technical assistance, call Traxxas at:

1-888-TRAXXAS

(1-888-872-9927) (U.S. residents only)

For orders, calls outside the U.S., and other information, call 972-549-3000, or fax to 972-549-3011 e-mail Traxxas at support@Traxxas.com

TRAXXAS.com

REV. 200701 0941

MAXX®

MODEL 89076-4

1/10 SCALE MAXX
MONSTER TRUCK



VELINEON VXL-4S ESC

VELINEON 540XL 2400KV
70MM BRUSHLESS MOTOR

TQi 2.4GHz TRANSMITTER
COMPATIBLE WITH TRAXXAS
LINK WIRELESS MODULE

THE MAXX EXPERIENCE

The Traxxas X-Maxx forever changed the face of RC monster trucks. Its radical new design, massive size, brutal strength, and unmatched power transformed X-Maxx into the stuff of legends. There is really nothing else like it… until now. Meet the all-new 1/10 Traxxas Maxx. Maxx expertly packages X-Maxx's innovative design elements into a lighter, more compact, more ferocious beast that is ready to take speed and strength to new levels of extreme intensity. Let the fun begin!

Front Assembly

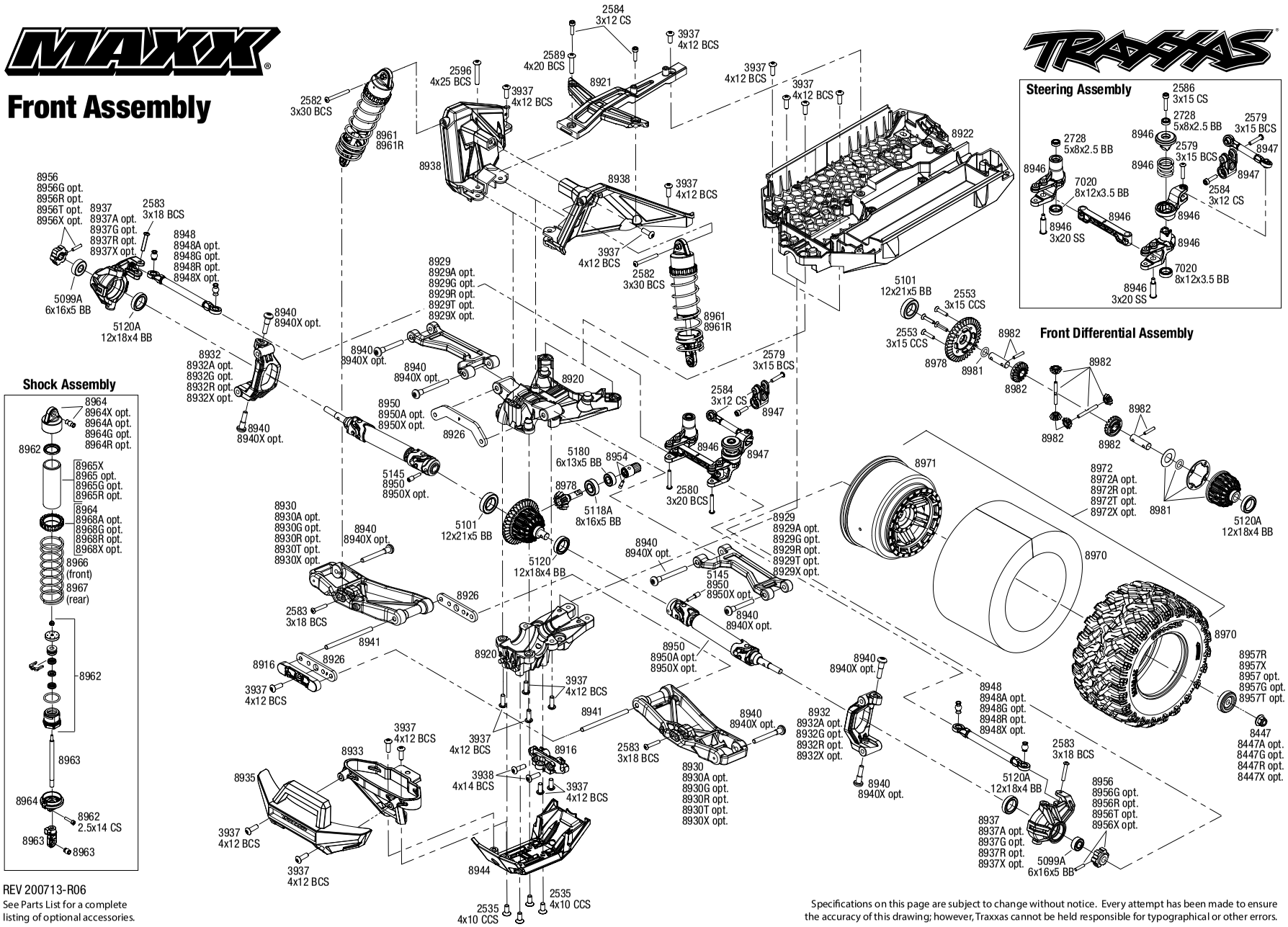

Shock Assembly

REV 200713-R06

See Parts List for a complete listing of optional accessories.

Steering Assembly

Front Differential Assembly

Specifications on this page are subject to change without notice. Every attempt has been made to ensure the accuracy of this drawing; however, Traxxas cannot be held responsible for typographical or other errors.

MAXX (89076-4)

Chassis Assembly

See Parts List for a complete listing of optional accessories.

REV 200713-R06

Specifications on this page are subject to change without notice. Every attempt has been made to ensure the accuracy of this drawing; however, Traxxas cannot be held responsible for typographical or other errors.

Rear Assembly

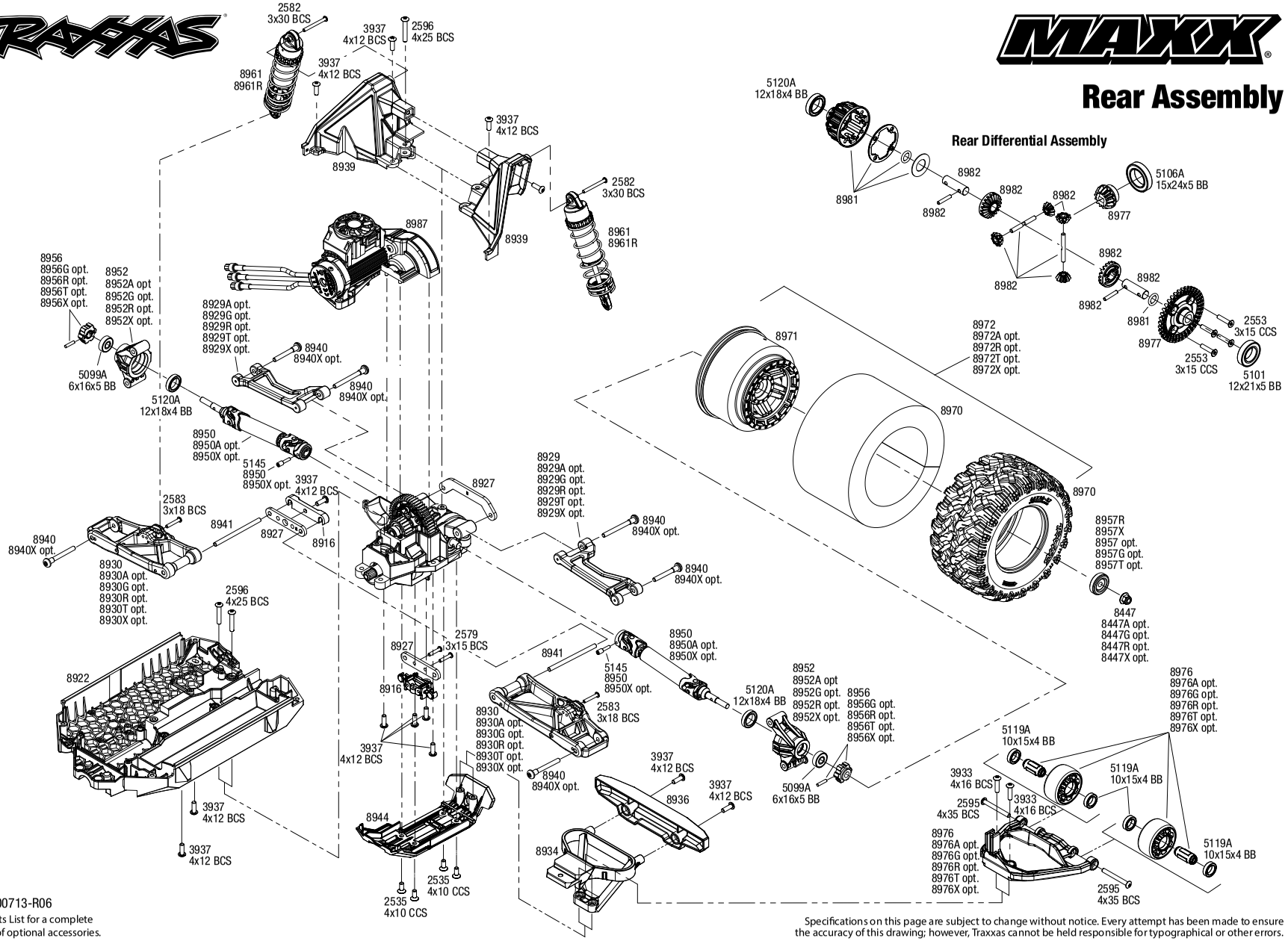

REV 200713-R06

See Parts List for a complete listing of optional accessories.

Specifications on this page are subject to change without notice. Every attempt has been made to ensure the accuracy of this drawing; however, Traxxas cannot be held responsible for typographical or other errors.

Questions? **Call toll-free, 1-888-TRAXXAS**

Questions? Call toll-free, 1-888-TRAXXAS

MAXX®

Transmission Assembly

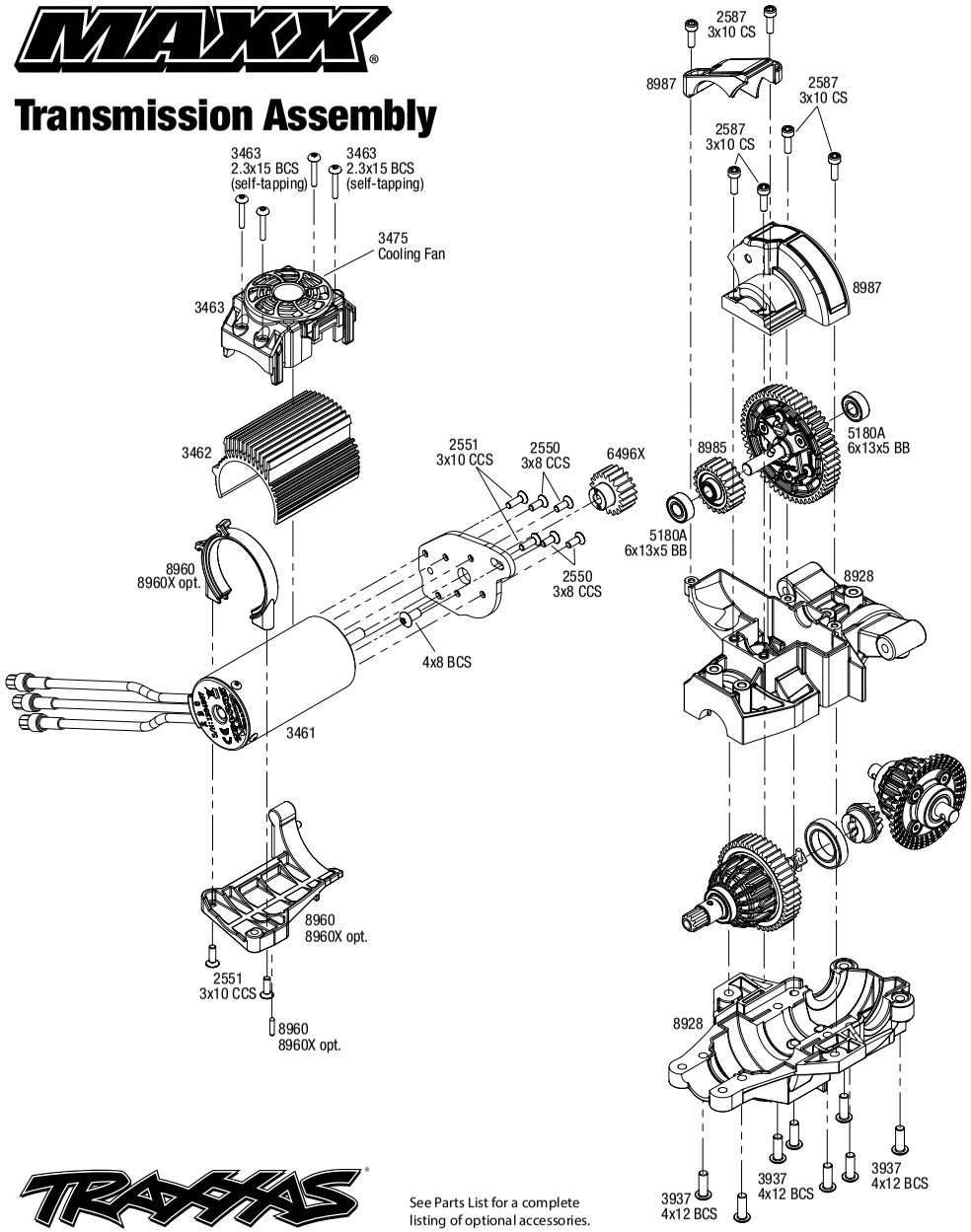

TRAXXAS®

See Parts List for a complete listing of optional accessories.

Center Differential Assembly

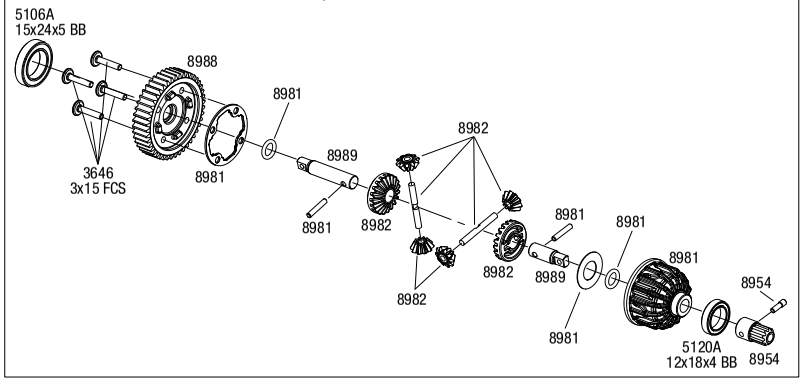

Cush Drive Assembly

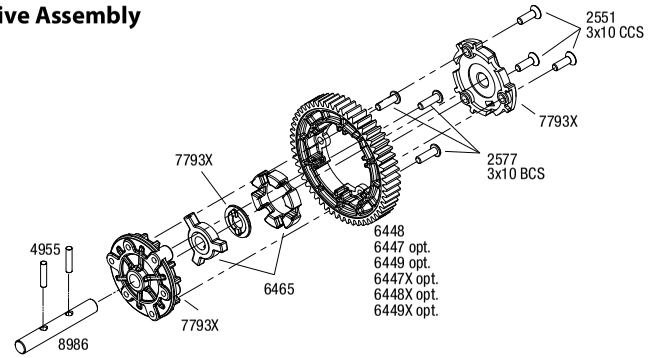

Front & Rear Driveshaft Assembly

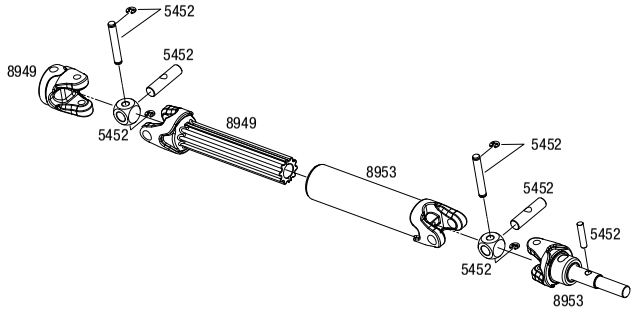

REV 200713-R06

Specifications on this page are subject to change without notice. Every attempt has been made to ensure the accuracy of this drawing; however, Traxxas cannot be held responsible for typographical or other errors.

MAXX®

Modular Assembly

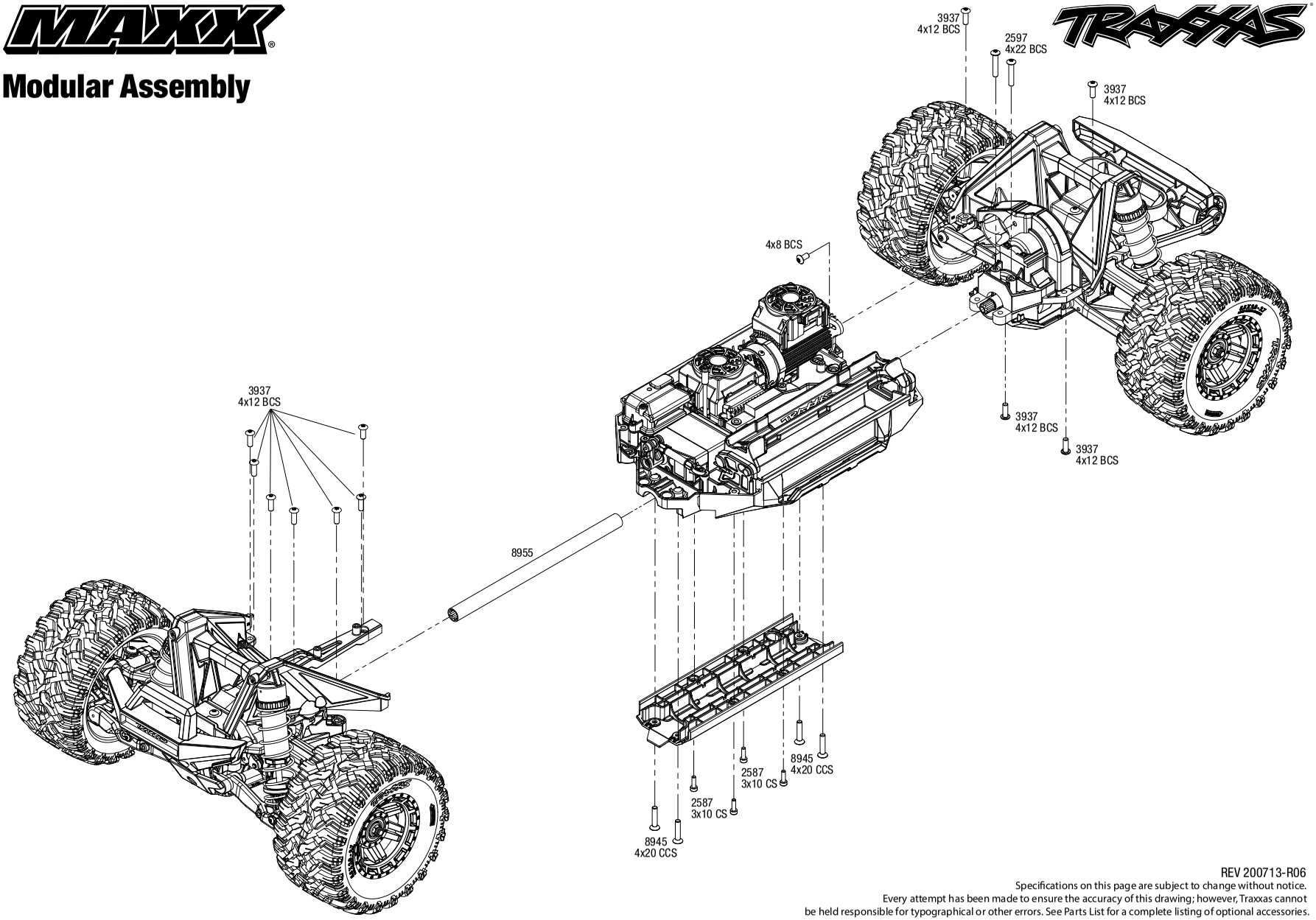

REV 200713-R06

Specifications on this page are subject to change without notice.
Every attempt has been made to ensure the accuracy of this drawing; however, Traxxas cannot be held responsible for typographical or other errors. See Parts List for a complete listing of optional accessories.

MAXX (89076-4)

Completed Assembly (view from bottom)

TRAXXAS

See Parts List for a complete listing of optional accessories.

Body Assembly

REV 200713-R06

Specifications on this page are subject to change without notice. Every attempt has been made to ensure the accuracy of this drawing; however, Traxxas cannot be held responsible for typographical or other errors. See Parts List for a complete listing of optional accessories.

PARTS SHOWN IN BOLD ARE OPTIONAL ACCESSORIES.

Part categories and individual part listings are arranged alphabetically.

Bearings & Bushings

5106A Ball bearing, black rubber sealed (15x24x5mm) (2)
5107A Ball bearing, black rubber sealed (17x26x5mm) (2)
5196A Ball bearing, black rubber sealed (20x32x7mm) (2)
5099A Ball bearing, black rubber sealed (6x16x5mm) (2)
2728 Ball bearings (5x8x2.5mm) (2)
5119A Ball bearings, black rubber sealed (10x15x4mm) (2)
5120A Ball bearings, black rubber sealed (12x18x4mm) (2)
5101A Ball bearings, black rubber sealed (12x21x5mm) (2)
5098A Ball bearings, black rubber sealed (17x23x4mm) (2)
5180A Ball bearings, black rubber sealed (6x13x5mm) (2)
5118A Ball bearings, black rubber sealed (8x16x5mm) (2)
5101 Ball bearings, blue rubber sealed (12x21x5mm) (2)
7020 Ball bearings, blue rubber sealed (8x12x3.5mm) (2)

Body & Accessories

8915 Body mounts, front & rear/ 3x12mm BCS (1)/ 3x12mm shoulder screw (2)/ 3x8mm CS (2)/ 3x15mm flat-head machine screw (9)
8910 Body reinforcement set, Maxx® (fits #8911 body)
8913 Body support, rear/ 3x10mm CS (4) (fits #8911 body)
8911 Body, Maxx® (clear, requires painting)/ window masks/ decal sheet
8911G Body, Maxx®, green (painted)/ decal sheet
8914 Body, Maxx®, heavy duty (clear, requires painting)/ window masks/ decal sheet
8911T Body, Maxx®, orange (painted)/ decal sheet
8911X Body, Maxx®, ProGraphix® (graphics are printed, requires paint & final color application)/ decal sheet
8911P Body, Maxx®, red-x (painted)/ decal sheet
8917 Skid plate, roof (body) (black)/ 3x10mm CS (4)
8917X Skid plate, roof (body) (blue)/ 3x12mm CS (4)
8917G Skid plate, roof (body) (green)/ 3x12mm CS (4)
8917T Skid plate, roof (body) (orange)/ 3x12mm CS (4)
8917R Skid plate, roof (body) (red)/ 3x12mm CS (4)
8917A Skid plate, roof (body) (white)/ 3x12mm CS (4)
8912X Tailgate protector, blue/ 3x15mm flat-head screw (4)
8912G Tailgate protector, green/ 3x15mm flat-head screw (4)
8912T Tailgate protector, orange/ 3x15mm flat-head screw (4)
8912R Tailgate protector, red/ 3x15mm flat-head screw (4)
8912A Tailgate protector, white/ 3x15mm flat-head screw (4)
8912 Tailgate protector/ 3x15mm flat-head screw (4)

Bumpers & Skidplates

8933 Bumper mount, front
8934 Bumper mount, rear
8935 Bumper, front
8935X Bumper, front (for use with #8990 LED light kit)
8936 Bumper, rear
8936X Bumper, rear (for use with #8990 LED light kit)
8945 Skidplate, center
8944 Skidplate, front (1), rear (1)

Chassis & Attachments

8919X Battery expansion kit, Maxx® (allows for installation of taller battery packs)
8919 Battery hold-down/ mounts (front & rear)/ battery compartment spacers/ foam pads
8915 Body mounts, front & rear/ 3x12mm BCS (1)/ 3x12mm shoulder screw (2)/ 3x8mm CS (2)/ 3x15mm flat-head machine screw (9)
8924 Box, receiver (sealed)/ wire cover/ foam pads/ silicone grease/ 2.5x10 CS (2)/ 3x15 CCS (3)
8933 Bumper mount, front
8934 Bumper mount, rear
8935 Bumper, front
8936 Bumper, rear
8922 Chassis
8921 Chassis brace, front
8987 Covers, gear (2)
8923 Nerf bars, chassis (2)
8925 Seal kit, receiver box (includes o-ring, seals, and silicone grease)
8938 Shock tower, front (left & right halves)
8939 Shock tower, rear (left & right halves)
8945 Skidplate, center
8944 Skidplate, front (1), rear (1)
8976 Wheelie bar
8976X Wheelie bar, blue
8976G Wheelie bar, green
8976T Wheelie bar, orange
8976R Wheelie bar, red
8976A Wheelie bar, white

Cush Drive Components

6465 Cush drive key/ pin/ elastomer damper
7793X Housing, cush drive (front & rear halves)
6447 Spur gear, 46-tooth (1.0 metric pitch)
6448 Spur gear, 50-tooth (1.0 metric pitch)
6449 Spur gear, 54-tooth (1.0 metric pitch)
6449X Spur gear, 54-tooth, steel (1.0 metric pitch)

Differential Components

8981 Carrier, differential/ x-ring gasket/ o-ring (2)/ 10x19.5x0.5 TW
8980 Differential kit, center (complete)
5136X Differential oil kit (1 each: 10K, 30K, 50K weights)
8949 Differential output yoke assembly, front or rear (assembled with external-splined half shaft)
8982 Gear set, differential (output gears (2)/ spider gears (4)/ spider gear shaft (2)/ output shaft (2)/ 2.5X13.8 pin (2))
8988 Gear, center differential, 44-tooth
5041 Grease, premium high performance (20cc)
8985 Input gear, transmission, 22-tooth/ 2.5x12mm pin
8986 Input shaft, transmission
5130 Oil, differential (100K wt) (0.7 oz (20cc))
5135 Oil, differential (10K wt)
5040 Oil, differential (20M wt) (standard)
5136 Oil, differential (30K wt)
5137 Oil, differential (50K wt)
8989 Output gear, center differential, hardened steel (2)
8978 Ring gear, differential/ pinion gear, differential (front)
8977 Ring gear, differential/ pinion gear, differential (rear)
8953 Stub axle assembly, outer (front or rear) (assembled with internal-splined half shaft)

Driveline Components

8952X Carriers, stub axle (blue-anodized 6061-T6 aluminum) (rear) (2)
8952G Carriers, stub axle (green-anodized 6061-T6 aluminum) (rear) (2)
8952 Carriers, stub axle (left & right)
8952A Carriers, stub axle (orange-anodized 6061-T6 aluminum) (rear) (2)
8952R Carriers, stub axle (red-anodized 6061-T6 aluminum) (rear) (2)
8951 Drive cup (1)/ 4x15.8mm screw pin (for use only with #8950X, 8950A driveshaft)
8954 Drive hub, front (1)/ 3x10 screw pin (1)
8950 Driveshaft assembly, front or rear, Maxx® Duty (1) (left or right) (fully assembled, ready to install)/ screw pin (1)
8955 Driveshaft, center, aluminum
8950A Driveshaft, steel constant-velocity (shaft only, 89.5mm) (1) (for use only with #8951 drive cup)
8950X Driveshafts, steel constant-velocity (assembled), front or rear (4) (#8654, 8654G, or 8654R and #7758, 7758G, or 7758R required for a complete set)
8447A Nuts, 5mm flanged nylon locking (aluminum, black-anodized, serrated) (4)
8447X Nuts, 5mm flanged nylon locking (aluminum, blue-anodized, serrated) (4)
8447G Nuts, 5mm flanged nylon locking (aluminum, green-anodized, serrated) (4)
8447R Nuts, 5mm flanged nylon locking (aluminum, red-anodized, serrated) (4)
8447 Nuts, 5mm flanged nylon locking (steel, black serrated) (8)
5040 Oil, differential (20M wt) (standard)
8953 Stub axle assembly, outer (front or rear) (assembled with internal-splined half shaft)
8956 Wheel hubs, hex (2)/ 2.5x14 pins (2)
8956X Wheel hubs, hex, aluminum (blue-anodized) (4)/ 4x13mm screw pins (4)
8956G Wheel hubs, hex, aluminum (green-anodized) (4)/ 4x13mm screw pins (4)
8956T Wheel hubs, hex, aluminum (orange-anodized) (4)/ 4x13mm screw pins (4)
8956R Wheel hubs, hex, aluminum (red-anodized) (4)/ 4x13mm screw pins (4)
8654 Wheel hubs, splined, 17mm (blue-anodized) (4)/ 4x5 GS (4)/ 3x14mm pin (4)
8654G Wheel hubs, splined, 17mm (green-anodized) (4)/ 4x5 GS (4)/ 3x14mm pin (4)

8654A **Wheel hubs, splined, 17mm (orange-anodized) (4)/ 4x5 GS (4)/ 3x14mm pin (4)**
8654R **Wheel hubs, splined, 17mm (red-anodized) (4)/ 4x5 GS (4)/ 3x14mm pin (4)**
8957 **Wheel washers, black (4)**
8957X Wheel washers, blue (4)
8957G **Wheel washers, green (4)**
8957T **Wheel washers, orange (4)**
8957R Wheel washers, red (4)

Front Suspension & Steering

8926 Bulkhead tie bar, front, upper (1)/ lower (2) (steel)
8920 Bulkhead, front (upper and lower)
8932X **Caster blocks (c-hubs), 6061-T6 aluminum (blue-anodized), left & right/ 4x22mm pin (4)/ 3x6mm BCS (4)/ retainers (4)**
8932G **Caster blocks (c-hubs), 6061-T6 aluminum (green-anodized), left & right/ 4x22mm pin (4)/ 3x6mm BCS (4)/ retainers (4)**
8932A **Caster blocks (c-hubs), 6061-T6 aluminum (orange-anodized), left & right/ 4x22mm pin (4)/ 3x6mm BCS (4)/ retainers (4)**
8932R **Caster blocks (c-hubs), 6061-T6 aluminum (red-anodized), left & right/ 4x22mm pin (4)/ 3x6mm BCS (4)/ retainers (4)**
8932 Caster blocks (c-hubs), left & right
8916 Mount, tie bar, front (1)/ rear (1)/ suspension pin retainer, front or rear (2)
8958 **Rod ends (4) (assembled with steel pivot balls) (replacement ends for #8547A, 8547R, 8547X, 8948A, 8948G, 8948R, 8948X, 8997A, 8997G, 8997R, 8997X)**
8947 Servo horn, steering/ linkage, steering (46mm, assembled with pivot balls)
8938 Shock tower, front (left & right halves)
8946 Steering bellcranks/ bellcrank support/ servo saver/ servo saver spring/ draglink/ 3x20mm shoulder screws (2)
8937X **Steering blocks, 6061-T6 aluminum (blue-anodized), left & right**
8937G **Steering blocks, 6061-T6 aluminum (green-anodized), left & right**
8937A **Steering blocks, 6061-T6 aluminum (orange-anodized), left & right**
8937R **Steering blocks, 6061-T6 aluminum (red-anodized), left & right**
8937 Steering blocks, left & right
8930 Suspension arm, lower, black (left or right, front or rear) (2)
8930X **Suspension arm, lower, blue (left and right, front or rear) (2)**
8930G **Suspension arm, lower, green (left and right, front or rear) (2)**
8930T **Suspension arm, lower, orange (left and right, front or rear) (2)**
8930R **Suspension arm, lower, red (left and right, front or rear) (2)**
8930A **Suspension arm, lower, white (left and right, front or rear) (2)**
8929 Suspension arms, upper, black (left or right, front or rear) (2)
8929X **Suspension arms, upper, blue (left or right, front or rear) (2)**
8929G **Suspension arms, upper, green (left or right, front or rear) (2)**
8929T **Suspension arms, upper, orange (left or right, front or rear) (2)**
8929R **Suspension arms, upper, red (left or right, front or rear) (2)**
8929A **Suspension arms, upper, white (left or right, front or rear) (2)**
8940X **Suspension pin set, complete (hardened steel), 4x64mm (4), 4x22mm (4), 4x38mm (4), 4x33mm (4), 4x47mm (4)/ 3x8mm BCS (14)/ 3x6mm BCS (4)/ retainers (8)**
8942 **Suspension pin set, front (left or right) (hardened steel), 4x64mm (1), 4x22mm (2), 4x38mm (1), 4x33mm (1), 4x47mm (1)**
8941 Suspension pins, lower, inner (front or rear), 4x64mm (2) (hardened steel)
8940 Suspension screw pin set, front or rear (hardened steel), 4x18mm (4), 4x38mm (2), 4x33mm (2), 4x43mm (2)

Hardware

3642 Attachment screws, shock (3x12mm shoulder screws) (6)
1552 Backplate screws (3x8mm cap-head machine) (6)/washers (6)/ wrench
2584 Head screws, 3x12mm cap-head machine (hex drive) (6) (TRX 2.5, 2.5R, 3.3)
8447A **Nuts, 5mm flanged nylon locking (aluminum, black-anodized, serrated) (4)**
8447X **Nuts, 5mm flanged nylon locking (aluminum, blue-anodized, serrated) (4)**
8447G **Nuts, 5mm flanged nylon locking (aluminum, green-anodized, serrated) (4)**
8447R **Nuts, 5mm flanged nylon locking (aluminum, red-anodized, serrated) (4)**
8447 Nuts, 5mm flanged nylon locking (steel, black serrated) (8)
5147X **Nuts, 5mm flanged nylon locking (steel, serrated) (8)**
3236 Screws, 2.5x12mm cap-head machine (6)
2577 Screws, 3x10mm button-head machine (hex drive) (6)
2587 Screws, 3x10mm cap-head machine (6) (no washer)
2551 Screws, 3x10mm countersunk machine (6) (hex drive)
4859 Screws, 3x10mm flat-head machine (hex drive) (4)
2578 Screws, 3x12mm button-head machine (hex drive) (6)
2579 Screws, 3x15mm button-head machine (hex drive) (6)
2553 Screws, 3x15mm countersunk machine (6) (hex drive)
3646 Screws, 3x15mm flat-head machine (hex drive) (6)
2583 Screws, 3x18mm button-head machine (hex drive) (6)
2581 Screws, 3x25mm button-head machine (hex drive) (6)
2582 Screws, 3x30mm button-head machine (hex drive) (6)
2550 Screws, 3x8mm countersunk machine (6) (hex drive)
3936 Screws, 4x10mm button-head machine (hex drive) (6)
2535 Screws, 4x10mm countersunk machine (hex drive) (6)
3937 Screws, 4x12mm button-head machine (hex drive) (6)
3938 Screws, 4x14mm button-head machine (hex drive) (6)
3933 Screws, 4x16mm button-head machine (hex drive) (6)
2589 Screws, 4x20mm button-head machine (hex drive) (6)
2596 Screws, 4x25mm button-head machine (hex drive) (6)
2595 Screws, 4x35mm button-head machine (hex drive) (6)
8940X **Suspension pin set, complete (hardened steel), 4x64mm (4), 4x22mm (4), 4x38mm (4), 4x33mm (4), 4x47mm (4)/ 3x8mm BCS (14)/ 3x6mm BCS (4)/ retainers (8)**
8942 **Suspension pin set, front (left or right) (hardened steel), 4x64mm (1), 4x22mm (2), 4x38mm (1), 4x33mm (1), 4x47mm (1)**
8943 **Suspension pin set, rear (left or right) (hardened steel), 4x64mm (1), 4x38mm (1), 4x33mm (1), 4x47mm (1)**

LED Lights

6590 **High-Voltage Power Amplifier**
7884 **LED light bar, front (high-voltage) (40 white LEDs (double row), 82mm wide) (fits X-Maxx® or Maxx®)**
7883 **LED light bar, rear, red (with white reverse light) (high-voltage) (24 red LEDs, 24 white LEDs, 100mm wide)/ light bar mount (fits X-Maxx® or Maxx®)**
8990 **LED light kit, Maxx®, complete (includes #6590 high-voltage power amplifier)**

Motors & Electronics

7749 **Adapter, standard servo (adapts standard servo to fit in X-Maxx® or Maxx®)**
3463 Cooling fan kit (with shroud), Velineon® 540XL motor
3475 Cooling fan, Velineon® VXL ESC (fits VXL-6s & VXL-8s)
8987 Covers, gear (2)
2092 Gear set (for 2090 servo)
3462 Heat sink, Velineon® 540XL motor
8960 Motor mounts (front and rear)/ pin (1)
8960X **Motor mounts (front and rear)/ pin (1) (for installation of #3481 motor into Maxx®)**
3461 Motor, Velineon® 540XL, 2400Kv 70mm, brushless (assembled with 12-gauge wire and gold-plated bullet connectors) (for Maxx®/Hoss™)
3464 Mount, motor cooling fan (fits #3461 motor)
2091 Servo case/ gaskets (for 2090 waterproof servo)
8947X **Servo horn, steel**
8947 Servo horn, steering/ linkage, steering (46mm, assembled with pivot balls)
2090 Servo, digital high-torque (ball bearing), waterproof
2085 **Servo, digital high-torque (ball bearing), waterproof (X-Maxx®/Maxx® mount)**
2085X **Servo, digital high-torque, metal gear (ball bearing), waterproof/ servo saver spring/ steering link**
3465 Velineon® VXL-4s High Output Electronic Speed Control, waterproof (brushless) (fwd/rev/brake)

Radio System, Batteries & Chargers

2849X **4000mAh 11.1v 3-Cell 25C LiPo Battery**
2872X **5000mAh 11.1v 3-Cell 25C LiPo Battery**
2889X **5000mAh 14.8v 4-Cell 25C LiPo Battery**
2857X **6400mAh 11.1v 3-Cell 25C LiPo Battery**
2938X **Adapter, Traxxas® iD® LiPo battery (adapts Traxxas iD batteries to separate balance ports)**
1926 Antenna caps, vinyl (2)/ antenna spool
1726 **Antenna, tube (1)/ vinyl antenna cap (1)/ wire retainer (1)**
1726A Antenna, tube, black (1)/ vinyl antenna cap (1)/ wire retainer (1)
2943 **Battery charge indicators (green (4), blue (4), grey (4))**
6548 Battery door, transmitter (replacement for #6516, 6517, 6528, 6529, 6530 transmitters)
8919X **Battery expansion kit, Maxx® (allows for installation of taller battery packs)**
2914 **Battery, Power Cell AA Alkaline (4)**
2996X **Battery/charger completer pack (includes #2971 iD charger (1), #2889X 5000mAh 14.8V 4-cell 25C LiPo battery (1))**
2990 **Battery/charger completer pack (includes #2972 Dual iD® charger (1), #2872X 5000mAh 11.1V 3-cell 25C LiPo battery (2))**
2972 **Charger, EZ-Peak® Dual, 100W, NiMH/LiPo with iD® Auto Battery Identification**
2973 **Charger, EZ-Peak® Live Dual, 200W, NiMH/LiPo with iD® Auto Battery Identification**
2971 **Charger, EZ-Peak® Live, 100W, NiMH/LiPo with iD® Auto Battery Identification**

2970 **Charger, EZ-Peak® Plus, 4 amp, NiMH/LiPo with iD® Auto Battery Identification**
6525 **Communication link, telemetry expander**
6541 **Connector, power tap (with cable) (long)/ wire tie**
2092 Gear set (for 2090 servo)
2968X **LiPo cell voltage checker/balancer (includes #2938X adapter for Traxxas® iD® batteries)**
2968 **LiPo cell voltage checker/balancer (requires #2938X adapter for Traxxas® iD® batteries)**
6535 **Mount, temperature sensor (electric motors)/ wire tie/ thermal pad**
6533 Receiver, micro, TQi 2.4GHz with telemetry & TSM (5-channel)
6552 **Seal kit, expander box (includes o-ring, seals, and silicone grease)**
6526 **Sensor, auto-detectable, temperature**
6527 **Sensor, auto-detectable, voltage**
6521 **Sensor, temperature and voltage (long)**
2091 Servo case/ gaskets (for 2090 waterproof servo)
2090 Servo, digital high-torque (ball bearing), waterproof
6553X **Telemetry expander 2.0 and GPS module 2.0, TQi radio system**
6550X **Telemetry expander 2.0, TQi radio system (for use only with #6551X GPS module)**
6551X **Telemetry GPS module 2.0, TQi radio system (for use only with #6550X telemetry expander)**
6509R TQi 2.4 GHz High Output radio system, 2-channel, Traxxas Link™ enabled, TSM (2-ch transmitter, 5-ch micro receiver)
6507R **TQi 2.4 GHz High Output radio system, 4-channel with Traxxas Link™ Wireless Module, TSM (4-ch transmitter, 5-ch micro receiver)**
6528 Transmitter, TQi Traxxas Link™ enabled, 2.4GHz high output, 2-channel (transmitter only)
6529 **Transmitter, TQi Traxxas Link™ enabled, 2.4GHz high output, 3-channel (transmitter only)**
6530 **Transmitter, TQi Traxxas Link™ enabled, 2.4GHz high output, 4-channel (transmitter only)**
6511 **Traxxas Link™ Wireless Module**

Ready-To-Race Model

89076-4 Maxx®: 1/10 Scale 4WD Brushless Electric Monster Truck with TQi Traxxas Link™ Enabled 2.4GHz Radio System & Traxxas Stability Management (TSM)®

Rear Suspension

8927 Bulkhead tie bar, rear, upper (1)/ lower front (1)/ lower rear (1) (steel)
8928 Bulkhead, rear (upper and lower)
8952X **Carriers, stub axle (blue-anodized 6061-T6 aluminum) (rear) (2)**
8952G **Carriers, stub axle (green-anodized 6061-T6 aluminum) (rear) (2)**
8952 Carriers, stub axle (left & right)
8952A **Carriers, stub axle (orange-anodized 6061-T6 aluminum) (rear) (2)**
8952R **Carriers, stub axle (red-anodized 6061-T6 aluminum) (rear) (2)**
8916 Mount, tie bar, front (1)/ rear (1)/ suspension pin retainer, front or rear (2)
8958 **Rod ends (4) (assembled with steel pivot balls) (replacement ends for #8547A, 8547R, 8547X, 8948A, 8948G, 8948R, 8948X, 8997A, 8997G, 8997R, 8997X)**
8939 Shock tower, rear (left & right halves)
8930 Suspension arm, lower, black (left or right, front or rear) (2)
8930X **Suspension arm, lower, blue (left and right, front or rear) (2)**
8930G **Suspension arm, lower, green (left and right, front or rear) (2)**
8930T **Suspension arm, lower, orange (left and right, front or rear) (2)**
8930R **Suspension arm, lower, red (left and right, front or rear) (2)**
8930A **Suspension arm, lower, white (left and right, front or rear) (2)**
8929 Suspension arms, upper, black (left or right, front or rear) (2)
8929X **Suspension arms, upper, blue (left or right, front or rear) (2)**
8929G **Suspension arms, upper, green (left or right, front or rear) (2)**
8929T **Suspension arms, upper, orange (left or right, front or rear) (2)**
8929R **Suspension arms, upper, red (left or right, front or rear) (2)**
8929A **Suspension arms, upper, white (left or right, front or rear) (2)**
8940X **Suspension pin set, complete (hardened steel), 4x64mm (4), 4x22mm (4), 4x38mm (4), 4x33mm (4), 4x47mm (4)/ 3x8mm BCS (14)/ 3x6mm BCS (4)/ retainers (8)**
8943 **Suspension pin set, rear (left or right) (hardened steel), 4x64mm (1), 4x38mm (1), 4x33mm (1), 4x47mm (1)**
8941 Suspension pins, lower, inner (front or rear), 4x64mm (2) (hardened steel)
8940 Suspension screw pin set, front or rear (hardened steel), 4x18mm (4), 4x38mm (2), 4x33mm (2), 4x43mm (2)

Shocks (GT-Maxx®)

8965X Body, GT-Maxx® shock (aluminum, blue-anodized) (1)
8965G **Body, GT-Maxx® shock (aluminum, green-anodized) (1)**
8965T Body, GT-Maxx® shock (aluminum, orange-anodized) (1)
8965R Body, GT-Maxx® shock (aluminum, red-anodized) (1)
8962 Rebuild kit, GT-Maxx® shocks (lower cartridge, assembled, pistons, piston nuts, bladders) (renews 2 shocks)
8964X **Shock caps, aluminum (blue-anodized), GT-Maxx® shocks (4)**
8964G **Shock caps, aluminum (green-anodized), GT-Maxx® shocks (4)**
8964T **Shock caps, aluminum (orange-anodized), GT-Maxx® shocks (4)**
8964R **Shock caps, aluminum (red-anodized), GT-Maxx® shocks (4)**
8964 Shock caps, GT-Maxx® shocks/ spring perch/ adjusters/ 2.5x14 CS (2) (for 2 shocks)
8963 Shock shaft, 72mm (GT-Maxx®) (steel, chrome finish) (2)/ rod ends (2)/ hollow balls (2)
8961 Shocks, GT-Maxx®, aluminum (blue-anodized) (fully assembled w/o springs) (2)
8961G Shocks, GT-Maxx®, aluminum (green-anodized) (fully assembled w/o springs) (2)
8961T Shocks, GT-Maxx®, aluminum (orange-anodized) (fully assembled w/o springs) (2)
8961R Shocks, GT-Maxx®, aluminum (red-anodized) (fully assembled w/o springs) (2)
1667 Silicone shock oil (30 wt), 60cc
8968X **Spring retainer (adjuster), blue-anodized aluminum, GT-Maxx® shocks (4) (assembled with o-ring)**
8968G **Spring retainer (adjuster), green-anodized aluminum, GT-Maxx® shocks (4) (assembled with o-ring)**
8968A **Spring retainer (adjuster), orange-anodized aluminum, GT-Maxx® shocks (4) (assembled with o-ring)**
8968R **Spring retainer (adjuster), red-anodized aluminum, GT-Maxx® shocks (4) (assembled with o-ring)**
8966 Springs, shock (natural finish) (GT-Maxx®) (1.210 rate) (2)
8967 Springs, shock (natural finish) (GT-Maxx®) (1.450 rate) (2)
8969 **Springs, shock (natural finish) (GT-Maxx®) (1.725 rate) (2)**

Spur Gears & Pinion Gears

6487X **Gear, 15-T pinion (1.0 metric pitch) (fits 5mm shaft)/ set screw (for use only with steel spur gears)**
6489X **Gear, 16-T pinion (1.0 metric pitch) (fits 5mm shaft)/ set screw (for use only with steel spur gears)**
6490X **Gear, 17-T pinion (1.0 metric pitch) (fits 5mm shaft)/ set screw (for use only with steel spur gears)**
6491X **Gear, 18-T pinion (1.0 metric pitch) (fits 5mm shaft)/ set screw (for use only with steel spur gears)**
6491R **Gear, 18-T pinion (machined) (1.0 metric pitch) (fits 5mm shaft)/ set screw (for use only with steel spur gears)**
6494X **Gear, 20-T pinion (1.0 metric pitch) (fits 5mm shaft)/ set screw (for use only with steel spur gears)**
6495X **Gear, 22-T pinion (1.0 metric pitch) (fits 5mm shaft)/ set screw (for use only with steel spur gears)**
6496X Gear, 24-T pinion (1.0 metric pitch) (fits 5mm shaft)/ set screw (for use only with steel spur gears)
6447 **Spur gear, 46-tooth (1.0 metric pitch)**
6447R **Spur gear, 46-tooth, steel (wide-face, 1.0 metric pitch)**
6448 Spur gear, 50-tooth (1.0 metric pitch)
6448R **Spur gear, 50-tooth, steel (wide-face, 1.0 metric pitch)**
6449 **Spur gear, 54-tooth (1.0 metric pitch)**
6449X **Spur gear, 54-tooth, steel (1.0 metric pitch)**

Steering Components

2728 Ball bearings (5x8x2.5mm) (2)
7020 Ball bearings, blue rubber sealed (8x12x3.5mm) (2)
8947X **Servo horn, steel**
8947 Servo horn, steering/ linkage, steering (46mm, assembled with pivot balls)
8946 Steering bellcranks/ bellcrank support/ servo saver/ servo saver spring/ draglink/ 3x20mm shoulder screws (2)
8948X **Toe links, front (TUBES blue-anodized, 7075-T6 aluminum, stronger than titanium) (88mm) (2)/ rod ends, rear (4)/ rod ends, front (4)/ aluminum wrench (1)**
8948G **Toe links, front (TUBES green-anodized, 7075-T6 aluminum, stronger than titanium) (88mm) (2)/ rod ends, rear (4)/ rod ends, front (4)/ aluminum wrench (1)**
8948A **Toe links, front (TUBES orange-anodized, 7075-T6 aluminum, stronger than titanium) (88mm) (2)/ rod ends, rear (4)/ rod ends, front (4)/ aluminum wrench (1)**
8948R **Toe links, front (TUBES red-anodized, 7075-T6 aluminum, stronger than titanium) (88mm) (2)/ rod ends, rear (4)/ rod ends, front (4)/ aluminum wrench (1)**
8948 Toe links, molded composite, 100mm (89mm center to center) (black) (2)

Suspension Linkage

8958 **Rod ends (4) (assembled with steel pivot balls) (replacement ends for #8547A, 8547R, 8547X, 8948A, 8948G, 8948R, 8948X, 8997A, 8997G, 8997R, 8997X)**
8942 **Suspension pin set, front (left or right) (hardened steel), 4x64mm (1), 4x22mm (2), 4x38mm (1), 4x33mm (1), 4x47mm (1)**

MAXX (89076-4)

8943	**Suspension pin set, rear (left or right) (hardened steel), 4x64mm (1), 4x38mm (1), 4x33mm (1), 4x47mm (1)**
8941	Suspension pins, lower, inner (front or rear), 4x64mm (2) (hardened steel)
8940	Suspension screw pin set, front or rear (hardened steel), 4x18mm (4), 4x38mm (2), 4x33mm (2), 4x43mm (2)
8948X	**Toe links, front (TUBES blue-anodized, 7075-T6 aluminum, stronger than titanium) (88mm) (2)/ rod ends, rear (4)/ rod ends, front (4)/ aluminum wrench (1)**
8948G	**Toe links, front (TUBES green-anodized, 7075-T6 aluminum, stronger than titanium) (88mm) (2)/ rod ends, rear (4)/ rod ends, front (4)/ aluminum wrench (1)**
8948A	**Toe links, front (TUBES orange-anodized, 7075-T6 aluminum, stronger than titanium) (88mm) (2)/ rod ends, rear (4)/ rod ends, front (4)/ aluminum wrench (1)**
8948R	**Toe links, front (TUBES red-anodized, 7075-T6 aluminum, stronger than titanium) (88mm) (2)/ rod ends, rear (4)/ rod ends, front (4)/ aluminum wrench (1)**
8948	Toe links, molded composite, 100mm (89mm center to center) (black) (2)

Team Traxxas Items

2514	Decal sheet, racing sponsors
9950	Official Team Traxxas® racing decal set (flag logo/ 6-color)
9909	Traxxas® racing banner, red & black (3x7 feet)

Tires & Wheels

8447A	**Nuts, 5mm flanged nylon locking (aluminum, black-anodized, serrated) (4)**
8447X	**Nuts, 5mm flanged nylon locking (aluminum, blue-anodized, serrated) (4)**
8447G	**Nuts, 5mm flanged nylon locking (aluminum, green-anodized, serrated) (4)**
8447R	**Nuts, 5mm flanged nylon locking (aluminum, red-anodized, serrated) (4)**
8447	Nuts, 5mm flanged nylon locking (steel, black serrated) (8)
5147X	**Nuts, 5mm flanged nylon locking (steel, serrated) (8)**
8973	**Tires & wheels, assembled, glued (black wheels, dual profile (2.8" outer, 3.6" inner), Sledgehammer™ tires, foam inserts) (2) (17mm splined) (TSM® rated)**
8972	Tires & wheels, assembled, glued (black wheels, Maxx® All-Terrain tires, foam inserts) (2) (17mm splined) (TSM® rated)
8972A	**Tires & wheels, assembled, glued (black, blue beadlock style wheels, Maxx® MT tires, foam inserts) (2) (17mm splined) (TSM® rated)**
8972T	**Tires & wheels, assembled, glued (black, orange beadlock style wheels, Maxx® MT tires, foam inserts) (2) (17mm splined) (TSM® rated)**
8972R	**Tires & wheels, assembled, glued (black, red beadlock style wheels, Maxx® MT tires, foam inserts) (2) (17mm splined) (TSM® rated)**
8972X	**Tires & wheels, assembled, glued (black, satin chrome beadlock style wheels, Maxx® MT tires, foam inserts) (2) (17mm splined) (TSM® rated)**
8970	Tires, Maxx® All-Terrain 2.8" (2)/ foam inserts (2)
8956	Wheel hubs, hex (2)/ 2.5x14 pins (2)
8956X	**Wheel hubs, hex, aluminum (blue-anodized) (4)/ 4x13mm screw pins (4)**
8956G	**Wheel hubs, hex, aluminum (green-anodized) (4)/ 4x13mm screw pins (4)**
8956T	**Wheel hubs, hex, aluminum (orange-anodized) (4)/ 4x13mm screw pins (4)**
8956R	**Wheel hubs, hex, aluminum (red-anodized) (4)/ 4x13mm screw pins (4)**
8654	**Wheel hubs, splined, 17mm (blue-anodized) (4)/ 4x5 GS (4)/ 3x14mm pin (4)**
8654G	**Wheel hubs, splined, 17mm (green-anodized) (4)/ 4x5 GS (4)/ 3x14mm pin (4)**
8654A	**Wheel hubs, splined, 17mm (orange-anodized) (4)/ 4x5 GS (4)/ 3x14mm pin (4)**
8654R	**Wheel hubs, splined, 17mm (red-anodized) (4)/ 4x5 GS (4)/ 3x14mm pin (4)**
8957	**Wheel washers, black (4)**
8957X	Wheel washers, blue (4)
8957G	**Wheel washers, green (4)**
8957T	**Wheel washers, orange (4)**
8957R	Wheel washers, red (4)
8971	Wheels (black) (2)

Transmission Components

8987	Covers, gear (2)
8985	Input gear, transmission, 22-tooth/ 2.5x12mm pin
8986	Input shaft, transmission
5040	Oil, differential (20M wt) (standard)

Traxxas Tools

3433X	**Body reamer (aluminum handle)**
3433	**Body reamer (plastic handle)**
3436	**Cap, body reamer**
3432	**Scissors, curved tip**
3431	**Scissors, straight tip**
8712	**Speed Bit Essentials Set, hex and nut driver, 7-piece, includes premium handle (medium), travel pouch, hex drivers (straight: 1.5mm, 2.0mm, 2.5mm) and nut drivers (5.0mm, 5.5mm, 7.0mm, and 8.0mm), 1/4" drive**
8721	**Speed bit handle, medium (one piece)**
8720	**Speed bit handle, premium, large (rubber overmold)**
8722	**Speed bit handle, premium, medium (rubber overmold)**
8710	**Speed Bit Master Set, hex and nut driver, 13-piece, includes premium handle (medium), travel pouch, hex drivers (straight: 1.5mm, 2.0mm, 2.5mm, 3.0mm), (ball-end: 2.0mm, 2.5mm, 3.0mm), and nut drivers (4.00mm, 4.50mm, 5.00mm, 5.50mm, 7.00mm, 8.00mm),**
8711	**Speed Bit Master Set, hex driver, 7-piece straight and ball end, includes premium handle (medium), travel pouch, hex drivers (straight: 1.5mm, 2.0mm, 2.5mm, 3.0mm) (ball end: 2.0mm, 2.5mm, 3.0mm), 1/4" drive**
8719	**Speed Bit Master Set, nut driver, 6-piece, includes premium handle (medium), travel pouch, and nut drivers (4.0mm, 4.5mm, 5.0mm, 5.5mm, 7.0mm, 8.0mm), 1/4" drive**
8716	**Speed Bit Set, hex driver, 2-piece ball-end (2.0mm, 2.5mm), 1/4" drive**
8716X	**Speed Bit Set, hex driver, 3-piece ball-end (2.0mm, 2.5mm, 3.0mm), 1/4" drive**
8715	**Speed Bit Set, hex driver, 3-piece straight (1.5mm, 2.0mm, 2.5mm), 1/4" drive**
8715X	**Speed Bit Set, hex driver, 4-piece straight (1.5mm, 2.0mm, 2.5mm, 3.0mm), 1/4" drive**
3415	**Tool set with pouch (includes 1.5mm, 2.0mm, 2.5mm, 3.0mm, 3.5mm, 4mm drivers/ 4mm, 5mm, 5.5mm, 7mm and 8mm nut drivers/ 2mm, 4mm, and 5mm slotted screwdrivers/ #00 Phillips, #0 Phillips, and #1 Phillips screwdrivers/ 4mm and 8mm wrench/ driver handle**

Turnbuckles & Threaded Rods

8948X	**Toe links, front (TUBES blue-anodized, 7075-T6 aluminum, stronger than titanium) (88mm) (2)/ rod ends, rear (4)/ rod ends, front (4)/ aluminum wrench (1)**
8948G	**Toe links, front (TUBES green-anodized, 7075-T6 aluminum, stronger than titanium) (88mm) (2)/ rod ends, rear (4)/ rod ends, front (4)/ aluminum wrench (1)**
8948A	**Toe links, front (TUBES orange-anodized, 7075-T6 aluminum, stronger than titanium) (88mm) (2)/ rod ends, rear (4)/ rod ends, front (4)/ aluminum wrench (1)**
8948R	**Toe links, front (TUBES red-anodized, 7075-T6 aluminum, stronger than titanium) (88mm) (2)/ rod ends, rear (4)/ rod ends, front (4)/ aluminum wrench (1)**
8948	Toe links, molded composite, 100mm (89mm center to center) (black) (2)

WideMaxx™ Suspension Kit

8996R	**Driveshaft, steel constant velocity (shaft only, 109.5mm) (1) (replacement shaft for #8996X)**
8996A	**Driveshaft, steel constant-velocity (shaft only, 109.5mm) (4) (for conversion of #8950X driveshafts to WideMaxx™ suspension)**
8996X	**Driveshafts, steel constant-velocity (assembled), front or rear (4) (for use with #8995 WideMaxx™ suspension kit) (requires #8654 series 17mm splined wheel hubs and #7758 series 17mm nuts for a complete set)**
8999	**Suspension arms, lower, black (left and right, front or rear) (2) (for use with #8995 WideMaxx™ suspension kit)**
8999X	**Suspension arms, lower, blue (left and right, front or rear) (2) (for use with #8995 WideMaxx™ suspension kit)**
8999G	**Suspension arms, lower, green (left and right, front or rear) (2) (for use with #8995 WideMaxx™ suspension kit)**
8999T	**Suspension arms, lower, orange (left and right, front or rear) (2) (for use with #8995 WideMaxx™ suspension kit)**
8999R	**Suspension arms, lower, red (left and right, front or rear) (2) (for use with #8995 WideMaxx™ suspension kit)**
8999A	**Suspension arms, lower, white (left and right, front or rear) (2) (for use with #8995 WideMaxx™ suspension kit)**
8998	**Suspension arms, upper, black (left or right, front or rear) (2) (for use with #8995 WideMaxx™ suspension kit)**
8998X	**Suspension arms, upper, blue (left or right, front or rear) (2) (for use with #8995 WideMaxx™ suspension kit)**
8998G	**Suspension arms, upper, green (left or right, front or rear) (2) (for use with #8995 WideMaxx™ suspension kit)**
8998T	**Suspension arms, upper, orange (left or right, front or rear) (2) (for use with #8995 WideMaxx™ suspension kit)**

8998R	Suspension arms, upper, red (left or right, front or rear) (2) (for use with #8995 WideMaxx™ suspension kit)
8998A	Suspension arms, upper, white (left or right, front or rear) (2) (for use with #8995 WideMaxx™ suspension kit)
8995	Suspension kit, WideMaxx™, black (includes front & rear suspension arms, front toe links, outer half shafts (extended), rear shock springs)
8995X	Suspension kit, WideMaxx™, blue (includes front & rear suspension arms, front toe links, outer half shafts (extended), rear shock springs)
8995G	Suspension kit, WideMaxx™, green (includes front & rear suspension arms, front toe links,outer half shafts (extended), rear shock springs)
8995T	Suspension kit, WideMaxx™, orange (includes front & rear suspension arms, front toe links, outer half shafts (extended), rear shock springs)
8995A	Suspension kit, WideMaxx™, white (includes front & rear suspension arms, front toe links, outer half shafts (extended), rear shock springs)
8997	Toe links, 119.8mm (108.6mm center to center) (black) (2) (for use with #8995 WideMaxx™ suspension kit)
8997X	Toe links, front (TUBES blue-anodized, 6061-T6 aluminum) (2) (for use with #8995 WideMaxx™ suspension kit)
8997G	Toe links, front (TUBES green-anodized, 6061-T6 aluminum) (2) (for use with #8995 WideMaxx™ suspension kit)
8997A	Toe links, front (TUBES orange-anodized, 6061-T6 aluminum) (2) (for use with #8995 WideMaxx™ suspension kit)
8997R	Toe links, front (TUBES red-anodized, 6061-T6 aluminum) (2) (for use with #8995 WideMaxx™ suspension kit)

If you have questions or need technical assistance, call Traxxas at:

1-888-TRAXXAS

(1-888-872-9927) (U.S. residents only)

For orders, calls outside the U.S., and other information, call 972-549-3000,
or fax to 972-549-3011 e-mail Traxxas at support@Traxxas.com

TRAXXAS.com

Ford GT · Mustang GT · 4-Tec 2.0 Chassis





TAB PAGE
FILE





4-TEC 2.0 STYLE & INNOVATION

READY-TO-RACE®

The Traxxas 4-Tec 2.0 AWD Chassis combines insightful design touches with precision engineering to create a thoroughly modern platform. No aspect was overlooked. It's not just our most adjustable chassis ever; it's built to be driven! Traxxas has captured the Ford GT in a stunning 1/10 scale replica that is faithful to the beautiful and functional styling of the the incredible flying buttress design. Every detail is there including the taillights and exhaust tips. Built to be driven, this Ford GT replica rests on the Traxxas 4-Tec 2.0 chassis that's all-new from the ground up.

TRAXXAS®
The Fastest Name In Radio Control®

WORLD'S FASTEST **SUPERCAR**

XO-1

MODEL 64077-3

100+ MPH 4WD ELECTRIC
SUPER CAR



100+ mph*

BELTED SLICK TIRES MOUNTED ON 3.3" SPLIT-SPOKE™ WHEELS

TRAXXAS BIG BLOCK BRUSHLESS MOTOR AND CASTLE CREATIONS MAMBA MONSTER EXTREME SPEED CONTROL

TQi 2.4GHz TRANSMITTER WITH TRAXXAS LINK WIRELESS MODULE

THE WORLD'S FASTEST READY-TO-RACE® SUPERCAR

Traxxas® is The Fastest Name In Radio Control®. For over 30 years, we have made it our mission to innovate. To lead. To find the next level of performance and capability. We are driven by a passion for speed and power, and now Traxxas has redefined the meaning of both. State-of-the-art technology. Cutting edge design. A total focus on quality and precision. All have been distilled into one vehicle that could only come from Traxxas. 0-60 in 2.3 seconds. 0-100 in 4.92 seconds. Top speed over 100mph! Unparalleled control thanks to Traxxas Stability Management. Simply put, the XO-1 is the world's fastest Ready-To-Race® radio controlled Supercar.

*With included optional pinion gear

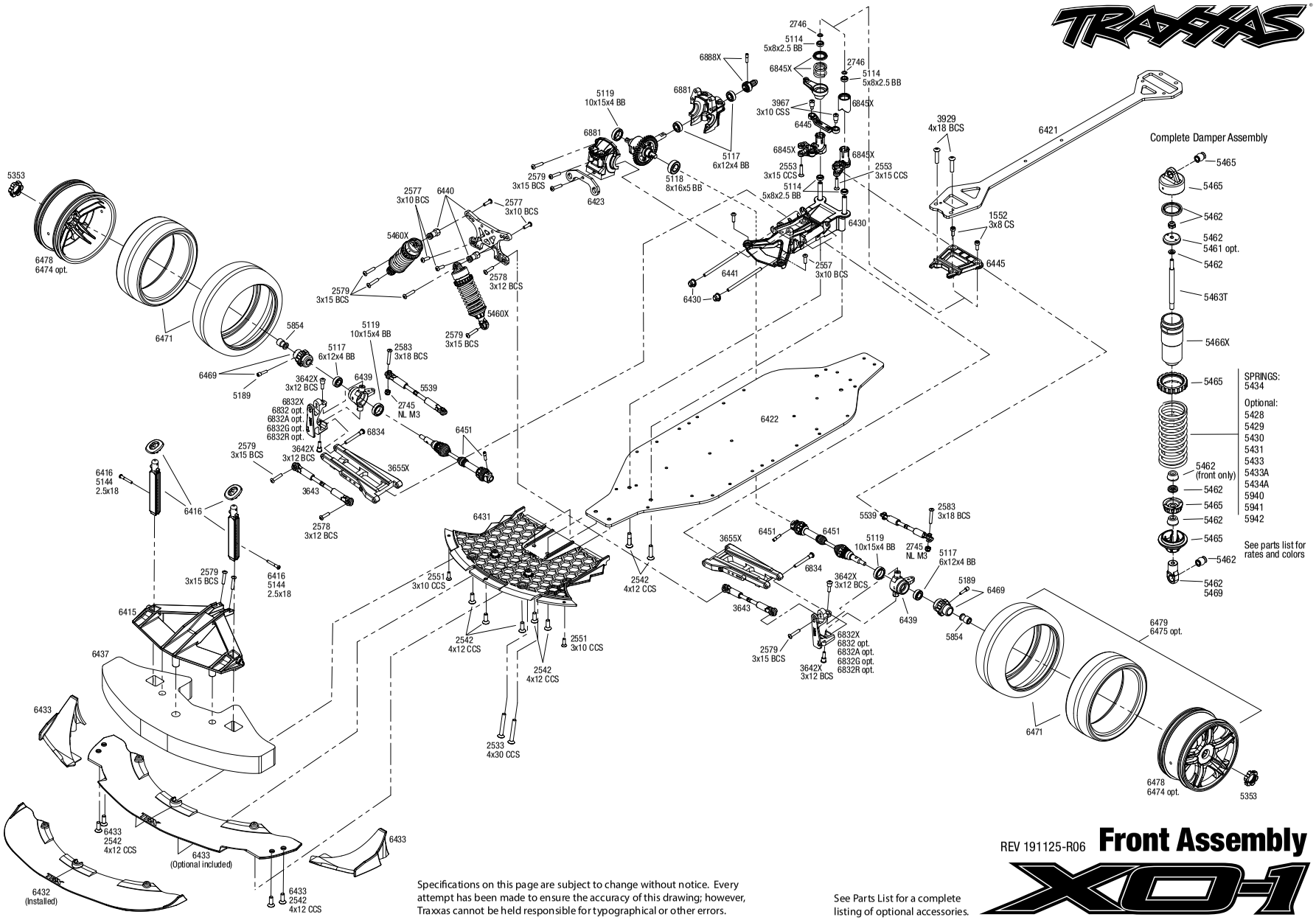

REV 191125-R06

Front Assembly

XO-1

Specifications on this page are subject to change without notice. Every attempt has been made to ensure the accuracy of this drawing; however, Traxxas cannot be held responsible for typographical or other errors.

See Parts List for a complete listing of optional accessories.

Questions? Call toll-free, 1-888-TRAXXAS

XO-1 Chassis Assembly

Telemetry Sensors

6524 - Plug grey plug into V/T slot on receiver (6533). Note that the red plug will be used to plug in the power tap from the ESC.

6520 - Plug into RPM slot on Receiver (6533)

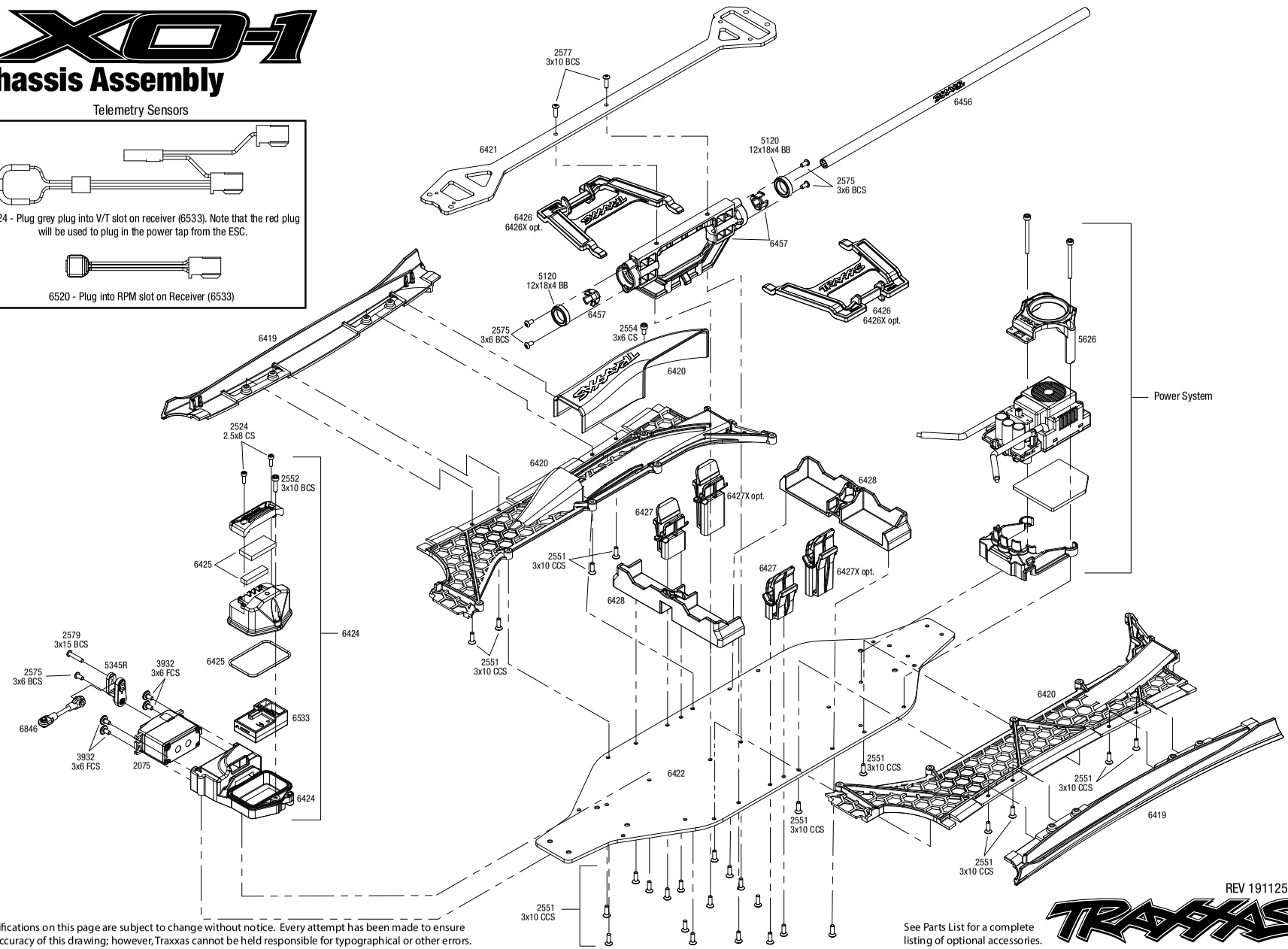

REV 191125-R06

Specifications on this page are subject to change without notice. Every attempt has been made to ensure the accuracy of this drawing; however, Traxxas cannot be held responsible for typographical or other errors.

See Parts List for a complete listing of optional accessories.

TRAXXAS®

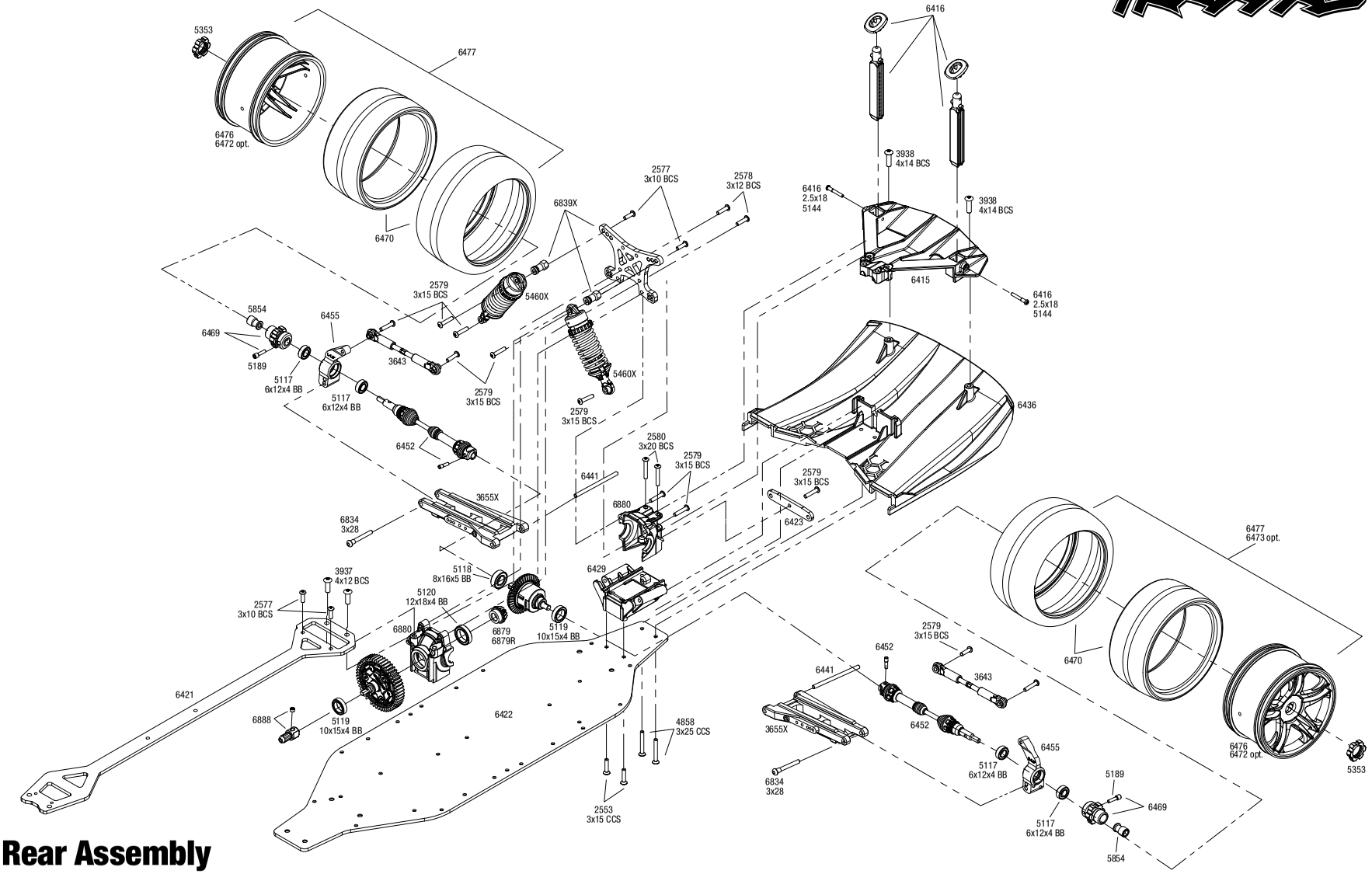

Rear Assembly

XO-1

See Parts List for a complete listing of optional accessories.

REV 191125-R06

Specifications on this page are subject to change without notice. Every attempt has been made to ensure the accuracy of this drawing; however, Traxxas cannot be held responsible for typographical or other errors.

XO-1® (64077-3)

EXPLODED **VIEWS**

XO-1 Transmission Assembly

Front Differential

Rear Differential

REV 191125-R06

Specifications on this page are subject to change without notice. Every attempt has been made to ensure the accuracy of this drawing; however, Traxxas cannot be held responsible for typographical or other errors.

See Parts List for a complete listing of optional accessories.

TRAXXAS®

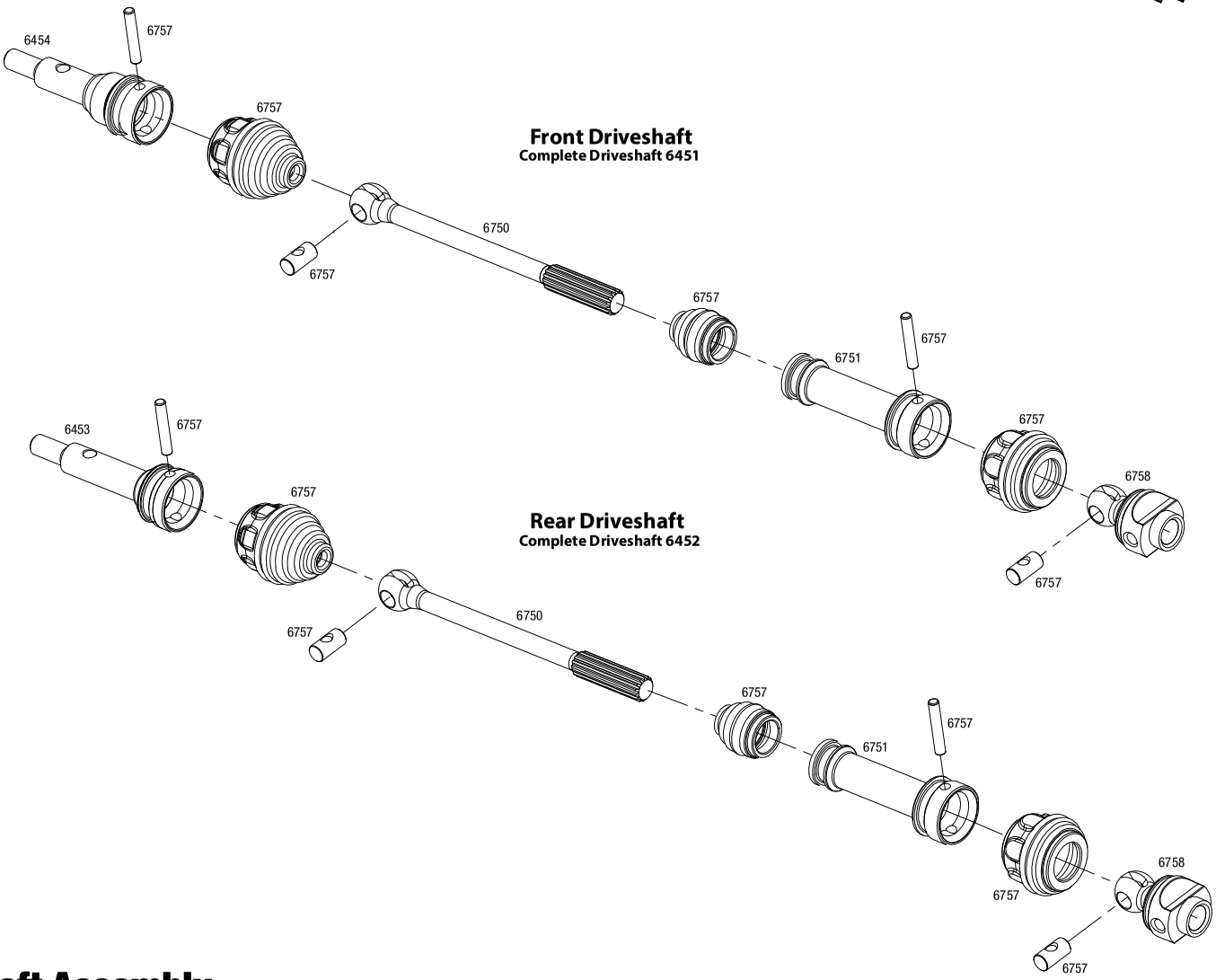

Driveshaft Assembly

XO-1

REV 191125-R06

Specifications on this page are subject to change without notice.
Every attempt has been made to ensure the accuracy of this drawing; however, Traxxas cannot be held responsible for typographical or other errors. See Parts List for a complete listing of optional accessories.

XO-1® (64077-3)

XO-1 Body & Wing Assembly

REV 191125-R06

Specifications on this page are subject to change without notice. Every attempt has been made to ensure the accuracy of this drawing; however, Traxxas cannot be held responsible for typographical or other errors.

See Parts List for a complete listing of optional accessories.

PARTS SHOWN IN BOLD ARE OPTIONAL ACCESSORIES.

Part categories and individual part listings are arranged alphabetically.

Bearings & Bushings

4607 **Ball bearings (5x11x4mm) (8)**
4612 **Ball bearings (10x15x4mm) (2)**
2728 **Ball bearings (5x8x2.5mm) (2)**
4614 **Ball bearings (6x12x4mm) (2)**
5119 Ball bearings, blue rubber sealed (10x15x4mm) (2)
5120 Ball bearings, blue rubber sealed (12x18x4mm) (2)
5114 Ball bearings, blue rubber sealed (5x8x2.5mm) (2)
5117 Ball bearings, blue rubber sealed (6x12x4mm) (2)
5118 Ball bearings, blue rubber sealed (8x16x5mm) (2)

Body & Accessories

1926 Antenna caps, vinyl (2)/ antenna spool
1726 Antenna, tube (1)/ vinyl antenna cap (1)/ wire retainer (1)
3934 Body clips, heavy duty (12)
6416 Body mount posts (2)/ body post pivot (2)/ screw pins, 2.5x18mm (2)
6415 Body mounts, front & rear
6716 **Body washers, foam, 2mm (2)/ 3mm (2)/ 4mm (4)**
6411 **Body, XO-1® (clear, requires painting)/ wing/ wing uprights (2)/ washers (2)/ decals**
6411X **Body, XO-1®, black (painted, decals applied, assembled with wing)**
6412 Body, XO-1®, ProGraphix® (graphics are printed, requires paint & final color application) / wing / wing uprights (2) / washers (2) / decals
6411R **Body, XO-1®, red (painted, decals applied, assembled with wing)**
2514 **Decal sheet, racing sponsors**
9950 **Official Team Traxxas® racing decal set (flag logo/ 6-color)**
5144 Screw pin, 2.5x18mm (6)
6414G **Wing (exocarbon)/ wing mounts (2)/ washers (2)**
6414 Wing/ wing mounts (2)/ washers (2)

Center Driveline

5119 Ball bearings, blue rubber sealed (10x15x4mm) (2)
5120 Ball bearings, blue rubber sealed (12x18x4mm) (2)
5117 Ball bearings, blue rubber sealed (6x12x4mm) (2)
6457 Center bearing carrier/ bushings (2)
6465 Cush drive key/ pin/ elastomer damper
6888 Drive hub, center, rear (1)/ 4x3 GS (1)
6888X Drive hub, front, hardened steel (1)/ screw pin (1)
6456 Driveshaft, center, 6061-T6 aluminum (blue-anodized)
5148 Grease, white lithium
6464 Housing, cush drive (front & rear halves)
6466 Input shaft (cush drive)/ pin
6461 Motor adapter/ GS 3x30mm
6460 Motor mount
6879R **Ring gear, differential/ pinion gear, differential (machined, spiral cut) (rear)**
6879 Ring gear, differential/ pinion gear, differential (rear)
2577X Screws, 3x10 button-head machine (hex drive) (stainless steel) (6)
2551 Screws, 3x10mm countersunk machine (6) (hex drive)
2575 Screws, 3x6mm button-head machine (hex drive) (6)
1647 Silicone grease

Chassis & Attachments

6428 Battery cups (2)
6427 Battery hold-down retainer (2)
6427X **Battery hold-down retainer, tall (2) (allows for installation of taller, multi-cell batteries)**
6426 Battery hold-downs (2)
6426X **Battery hold-downs, tall (2) (allows for installation of taller, multi-cell batteries)**
6437 Body bumper, foam
6416 Body mount posts (2)/ body post pivot (2)/ screw pins, 2.5x18mm (2)
6415 Body mounts, front & rear
6424 Box, receiver (sealed) (servo mount)/ foam (2)/ BCS 3x10mm/ CS 2.5x8mm (2)/ GS 3x4mm/ silicone grease
6423 Bulkhead tie bars, front & rear, aluminum (blue-anodized)
6430 Bulkhead, front/ tie bar bushings (2)
6429 Bulkhead, rear
6457 Center bearing carrier/ bushings (2)
6421 Chassis brace, 6061-T6 aluminum (dark titanium anodized)
6422 Chassis, 6061-T6 aluminum (dark titanium anodized)
6436 Diffuser, rear
6461 Motor adapter/ GS 3x30mm
6460 Motor mount
6425 Seal kit, receiver box (includes o-ring, seals, and silicone grease)
6432 Splitter extension (universal)/ 3x10mm CC (2)
6433 Splitter extension / canards, left and right / 4x12mm CCS (4)/ 3x10mm CC (2)
6431 Splitter mount
6419 Tunnel extensions, left & right
6420 Tunnels, left & right/ vent cover/ 3x8mm CS (1)

Cush Drive Components

6465 Cush drive key/ pin/ elastomer damper
6464 Housing, cush drive (front & rear halves)
6466 Input shaft (cush drive)/ pin
6447 Spur gear, 46-tooth (1.0 metric pitch)
6448 Spur gear, 50-tooth (1.0 metric pitch)
6449 Spur gear, 54-tooth (1.0 metric pitch)

Differential Components

5119 Ball bearings, blue rubber sealed (10x15x4mm) (2)
5120 Ball bearings, blue rubber sealed (12x18x4mm) (2)
5117 Ball bearings, blue rubber sealed (6x12x4mm) (2)
5118 Ball bearings, blue rubber sealed (8x16x5mm) (2)
3978 Carrier, differential (heavy duty)/ x-ring gaskets (2)/ ring gear gasket/ bushings (2)/ 6x10x0.5 TW
5136X **Differential oil kit (1 each: 10K, 30K, 50K weights)**
6882X Gear set, differential (output gears (2)/ spider gears (2)/ spider gear shaft, carrier support)
6881 Housings, differential, front
6880 Housings, differential, rear
5130 Oil, differential (100K weight) (.7 oz (20cc))
5135 Oil, differential (10K weight)
5136 **Oil, differential (30K weight)**
5039 **Oil, differential (500K weight)**
5137 **Oil, differential (50K weight)**
5379X Ring gear, differential/ pinion gear, differential
5379R **Ring gear, differential/ pinion gear, differential (machined, spiral cut) (front)**
6879R **Ring gear, differential/ pinion gear, differential (machined, spiral cut) (rear)**
6879 Ring gear, differential/ pinion gear, differential (rear)
3236 Screws, 2.5x12mm cap-head machine (6)
2579 Screws, 3x15mm button-head machine (hex drive) (6)

Driveline Components

5119 Ball bearings, blue rubber sealed (10x15x4mm) (2)
5117 Ball bearings, blue rubber sealed (6x12x4mm) (2)
6457 Center bearing carrier/ bushings (2)
6758 Differential output shaft (for steel constant-velocity driveshafts) (2)
6456 Driveshaft, center, 6061-T6 aluminum (blue-anodized)
6451 Driveshaft, front (steel-spline constant-velocity) (complete assembly) (1)
6452 Driveshaft, rear (steel-spline constant-velocity) (complete assembly) (1)
6750 Half shaft, external splined (steel-spline constant-velocity) (1)
6751 Half shaft, internal splined (steel-spline constant-velocity) (1)
5854 Hub retainer, 17mm hubs, M4 X 0.7 (4) (use with #5853X, #6856X, #6469)
6757 Rebuild kit, steel-splined constant-velocity driveshafts (includes pins, dustboots, lube, and hardware)
5189 Screw pins, 4x13mm (with threadlock) (4)
6454 Stub axle, front, 6mm (steel-splined constant-velocity driveshaft) (2)
6453 Stub axle, rear, 6mm (steel-splined constant-velocity driveshaft) (2)
6469 Wheel hub, splined, 17mm, 6061-T6 aluminum (blue-anodized) (4)/ screw pin, 4x13mm (with threadlock) (4) (for 6mm axles)
5353 Wheel nuts, splined, 17mm (blue-anodized) (4)

Front Suspension & Steering

1552 Screws, 3x8mm cap-head machine (hex drive) (6)/washers (6)/ wrench
5114 Ball bearings, blue rubber sealed (5x8x2.5mm) (2)
6445 Bellcrank brace/ draglink
6423 Bulkhead tie bars, front & rear, aluminum (blue-anodized)
6430 Bulkhead, front/ tie bar bushings (2)
3643X **Camber links, front (TUBES blue-anodized, 7075-T6 aluminum, stronger than titanium) (83mm) (2)/ rod ends, rear (4)/ rod ends, front (4)/ aluminum wrench (1)**
3643G **Camber links, front (TUBES green-anodized, 7075-T6 aluminum, stronger than titanium) (83mm) (2)/ rod ends, rear (4)/ rod ends, front (4)/ aluminum wrench (1)**
3643R **Camber links, front (TUBES red-anodized, 7075-T6 aluminum, stronger than titanium) (83mm) (2)/ rod ends, rear (4)/ rod ends, front (4)/ aluminum wrench (1)**

XO-1® (64077-3)

6832X	Caster blocks (c-hubs), 6061-T6 aluminum (blue-anodized), left & right
6832G	**Caster blocks (c-hubs), 6061-T6 aluminum (green-anodized), left & right**
6832A	**Caster blocks (c-hubs), 6061-T6 aluminum (orange-anodized), left & right**
6832R	**Caster blocks (c-hubs), 6061-T6 aluminum (red-anodized), left & right**
6832	**Caster blocks (c-hubs), left & right**
6881	Housings, differential, front
2553	Screws, 3x15mm countersunk machine (6) (hex drive)
3932	Screws, 3x6mm flat-head machine (hex drive) (6)
5345R	Servo horns, steering, long (2), short (2)/ linkage, steering (3x20mm turnbuckle) (2)/ rod ends (short) (4)/ hollow balls (4)
6440	Shock tower, front, 7075-T6 aluminum (blue-anodized)
6845X	Steering bellcranks/ servo saver/ servo saver spring/ servo spring retainer/servo horn, steering
6439	Steering blocks, 6061-T6 aluminum, left & right (blue-anodized)
6454	Stub axle, front, 6mm (steel-splined constant-velocity driveshaft) (2)
3655X	Suspension arms, left & right
6834	Suspension pin set, complete (front and rear)
6441	Suspension pins, font & rear (4)/ tie bar bushings
6498	**Sway bar kit, XO-1® (front and rear) (includes front and rear sway bars and adjustable linkages)**
3643	Turnbuckles, camber link, 49mm (82mm center to center) (assembled with rod ends and hollow balls) (1 left, 1 right)
5539	Turnbuckles, camber links, 58mm (assembled with rod ends and hollow balls) (2)

Hardware

1926	Antenna caps, vinyl (2)/ antenna spool
1726	Antenna, tube (1)/ vinyl antenna cap (1)/ wire retainer (1)
1552	Screws, 3x8mm cap-head machine (hex drive) (6)/washers (6)/ wrench
3934	Body clips, heavy duty (12)
5476X	Hex wrenches; 1.5mm, 2mm, 2.5mm, 3mm, 2.5mm ball
5475	Multi-tool (plastic)
2745	Nuts, 3mm nylon locking (12)
5144	Screw pin, 2.5x18mm (6)
5189	Screw pins, 4x13mm (with threadlock) (4)
3236	Screws, 2.5x12mm cap-head machine (6)
2524	Screws, 2.5x8mm countersunk machine (hex drive) (6)
2577X	Screws, 3x10 button-head machine (hex drive) (stainless steel) (6)
2577	Screws, 3x10mm button-head machine (hex drive) (6)
2551	Screws, 3x10mm countersunk machine (6) (hex drive)
2578	Screws, 3x12mm button-head machine (hex drive) (6)
2552	Screws, 3x12mm countersunk machine (6) (hex drive)
2579	Screws, 3x15mm button-head machine (hex drive) (6)
5142	Screws, 3x15mm cap-head machine (hex drive) (with split and flat washers) (6)
2553	Screws, 3x15mm countersunk machine (6) (hex drive)
2583	Screws, 3x18mm button-head machine (hex drive) (6)
2580	Screws, 3x20mm button-head machine (hex drive) (6)
2575	Screws, 3x6mm button-head machine (hex drive) (6)
2554	Screws, 3x6mm cap-head machine (hex drive) (6)
3932	Screws, 3x6mm flat-head machine (hex drive) (6)
3937	Screws, 4x12mm button-head machine (hex drive) (6)
2542	Screws, 4x12mm countersunk machine (hex drive) (6)
3938	Screws, 4x14mm button-head machine (hex drive) (6)
2546	Screws, 4x15mm countersunk machine (hex drive) (6)
3929	Screws, 4x18mm button-head machine (hex drive) (6)
2533	Screws, 4x30mm countersunk machine (hex drive) (6)
3967	Shoulder screws 3x10 (6) (without threadlock)
6834	Suspension pin set, complete (front and rear)
5480X	Wheel wrench, splined, 17mm

Manuals

6499	Owner's manual, XO-1®

Motors & Electronics

1726	Antenna, tube (1)/ vinyl antenna cap (1)/ wire retainer (1)
2072A	Gear set (for 2070, 2075 servos)
2252	**Gear set, metal (for 2250, 2255 servos)**
5626	Hold down bracket, electronic speed control
6461	Motor adapter/ GS 3x30mm
6460	Motor mount
5142	Screws, 3x15mm cap-head machine (hex drive) (with split and flat washers) (6)
2546	Screws, 4x15mm countersunk machine (hex drive) (6)
2254	**Servo case, aluminum (blue-anodized) (middle) (for 2250 servo)**
2253	**Servo case, aluminum (red-anodized) (middle) (for 2255 servo)**
2251	**Servo case, plastic (top, middle, bottom)/ gaskets/ hardware (for 2250, 2255 servos)**
2074	Servo case/gaskets (for 2056 and 2075 waterproof servos)
2075	Servo, digital high-torque (ball bearing), waterproof
2250	**Servo, digital high-torque 330 coreless, metal gear (ball bearing), waterproof**
2255	**Servo, digital high-torque 400 brushless, metal gear (ball bearing), waterproof**

Radio System, Batteries & Chargers

2854X	**10000mAh 7.4v 2-Cell 25C LiPo Battery**
2872X	**5000mAh 11.1v 3-Cell 25C LiPo Battery**
2842X	**5000mAh 7.4v 2-Cell 25C LiPo Battery**
2843X	**5800mAh 7.4v 2-Cell 25C LiPo Battery**
2857X	**6400mAh 11.1v 3-Cell 25C LiPo Battery**
2869X	**7600mAh 7.4v 2-Cell 25C LiPo Battery**
2878X	**8400mAh 11.1v 3-Cell 25C LiPo Battery**
2943	**Battery charge indicators (green (4), blue (4), grey (4))**
6428	Battery cups (2)
6548	Battery door, transmitter (replacement for #6516, 6517, 6528, 6529, 6530 transmitters)
6427	Battery hold-down retainer (2)
6427X	**Battery hold-down retainer, tall (2) (allows for installation of taller, multi-cell batteries)**
6426	Battery hold-downs (2)
6426X	**Battery hold-downs, tall (2) (allows for installation of taller, multi-cell batteries)**
2914	**Battery, Power Cell AA Alkaline (4)**
2991	**Battery/charger completer pack (includes #2972 Dual iD® charger (1), #2869X 7600mAh 7.4V 2-cell 25C LiPo battery (2))**
2990	**Battery/charger completer pack (includes #2972 Dual iD® charger (1), #2872X 5000mAh 11.1V 3-cell 25C LiPo battery (2))**
2972	**Charger, EZ-Peak® Dual, 100W, NiMH/LiPo with iD® Auto Battery Identification**
2973	**Charger, EZ-Peak® Live Dual, 200W, NiMH/LiPo with iD® Auto Battery Identification**
2971	**Charger, EZ-Peak® Live, 100W, NiMH/LiPo with iD® Auto Battery Identification**
2970	**Charger, EZ-Peak® Plus, 4 amp, NiMH/LiPo with iD® Auto Battery Identification**
6525	**Communication link, telemetry expander**
2072A	Gear set (for 2070, 2075 servos)
2252	**Gear set, metal (for 2250, 2255 servos)**
2968X	**LiPo cell voltage checker/balancer (includes #2938X adapter for Traxxas® iD® batteries)**
2968	**LiPo cell voltage checker/balancer (requires #2938X adapter for Traxxas® iD® batteries)**
6556	**Mount, telemetry expander (fits XO-1®, E-Revo®*, Summit*, all Maxx® trucks, Revo® 3.3, Slayer Pro 4X4) (*requires rear chassis brace #5632)**
6535	**Mount, temperature sensor (electric motors)/ wire tie/ thermal pad**
6533	Receiver, micro, TQi 2.4GHz with telemetry & TSM (5-channel)
6552	**Seal kit, expander box (includes o-ring, seals, and silicone grease)**
6526	**Sensor, auto-detectable, temperature**
6527	**Sensor, auto-detectable, voltage**
6520	Sensor, RPM (long)/ 3x4mm BCS (2)/ 3x4 GS (1)
6524	Sensor, temperature & voltage (fits XO-1®)
6521	Sensor, temperature and voltage (long)
2254	**Servo case, aluminum (blue-anodized) (middle) (for 2250 servo)**
2253	**Servo case, aluminum (red-anodized) (middle) (for 2255 servo)**
2251	**Servo case, plastic (top, middle, bottom)/ gaskets/ hardware (for 2250, 2255 servos)**
2074	Servo case/gaskets (for 2056 and 2075 waterproof servos)
2075	Servo, digital high-torque (ball bearing), waterproof
2250	**Servo, digital high-torque 330 coreless, metal gear (ball bearing), waterproof**
2255	**Servo, digital high-torque 400 brushless, metal gear (ball bearing), waterproof**
6553X	**Telemetry expander 2.0 and GPS module 2.0, TQi radio system**
6550X	**Telemetry expander 2.0, TQi radio system (compatible only with #6551X GPS module)**
6550	**Telemetry expander, TQi radio system**
6551X	**Telemetry GPS module 2.0, TQi radio system (compatible only with #6550X telemetry expander)**
6540	Telemetry trigger magnet, 5X2mm (1)
6509R	TQi 2.4 GHz High Output radio system, 2-channel, Traxxas Link™ enabled, TSM (2-ch transmitter, 5-ch micro receiver)
6507R	**TQi 2.4 GHz High Output radio system, 4-channel with Traxxas Link™ Wireless Module, TSM (4-ch transmitter, 5-ch micro receiver)**
6528	Transmitter, TQi Traxxas Link™ enabled, 2.4GHz high output, 2-channel (transmitter only)

6529	**Transmitter, TQi Traxxas Link™ enabled, 2.4GHz high output, 3-channel (transmitter only)**
6530	**Transmitter, TQi Traxxas Link™ enabled, 2.4GHz high output, 4-channel (transmitter only)**
6511	Traxxas Link™ Wireless Module

Ready-To-Race Model

64077-3	XO-1®: 1/7 Scale AWD Supercar with TQi 2.4GHz Radio System, Traxxas Link™ Wireless Module, & Traxxas Stability Management (TSM)®

Rear Suspension

6455	Axle carriers, rear, 6061-T6 aluminum, left & right (blue-anodized)
6423	Bulkhead tie bars, front & rear, aluminum (blue-anodized)
6429	Bulkhead, rear
3643X	**Camber links, front (TUBES blue-anodized, 7075-T6 aluminum, stronger than titanium) (83mm) (2)/ rod ends, rear (4)/ rod ends, front (4)/ aluminum wrench (1)**
3643G	**Camber links, front (TUBES green-anodized, 7075-T6 aluminum, stronger than titanium) (83mm) (2)/ rod ends, rear (4)/ rod ends, front (4)/ aluminum wrench (1)**
3643R	**Camber links, front (TUBES red-anodized, 7075-T6 aluminum, stronger than titanium) (83mm) (2)/ rod ends, rear (4)/ rod ends, front (4)/ aluminum wrench (1)**
6880	Housings, differential, rear
6839X	Shock tower, front, 7075-T6 aluminum (blue-anodized)
6453	Stub axle, rear, 6mm (steel-splined constant-velocity driveshaft) (2)
3655X	Suspension arms, left & right
6834	Suspension pin set, complete (front and rear)
6441	Suspension pins, font & rear (4)/ tie bar bushings
6498	**Sway bar kit, XO-1® (front and rear) (includes front and rear sway bars and adjustable linkages)**
3643	Turnbuckles, camber link, 49mm (82mm center to center) (assembled with rod ends and hollow balls) (1 left, 1 right)

Shocks (GTR)

5466	**Body, GTR shock (aluminum) (1)**
5467A	**Body, GTR shock (aluminum, blue-anodized) (1)**
5467R	**Body, GTR shock (aluminum, red-anodized) (1)**
5466X	Body, GTR shock (hard-anodized, PTFE-coated aluminum) (1)
5467	**Body, GTR shock (molded composite) (2)**
5465	Caps and spring retainers, GTR shock (upper cap (2)/ hollow balls (2)/ bottom cap (2)/ upper retainer (2)/ lower retainer (2))
5464	**Dust boot, shock (expandable, seals and protects shock shaft)(1 pair)**
5475	Multi-tool (plastic)
5158	Nuts, 2.5mm nylon locking (12)
5562	**Rebuild kit, GTR composite shocks (x-rings, bladders, all pistons, piston nuts, shock rod ends) renews 2 shocks**
5462	Rebuild kit, GTR shock (x-rings, bump stops, bladders, all pistons, piston nuts, shock rod ends) renews 2 shocks
5469	Rod ends (GTR shocks) (6)
5463	**Shaft, GTR shock (2) (stainless)**
5463T	Shaft, GTR shock, TiN-coated (2)
5460	**Shocks, GTR aluminum (assembled) (2) (without springs)**
5460A	**Shocks, GTR aluminum, blue-anodized (fully assembled w/o springs) (4)**
5460R	**Shocks, GTR aluminum, red-anodized (fully assembled w/o springs) (4)**
5561	**Shocks, GTR composite (assembled) (2) (without springs)**
5460X	Shocks, GTR hard-anodized, PTFE-coated aluminum bodies with TiN shafts (fully assembled w/o springs) (4)
1666	Silicone shock oil (30 wt)
5461	**Variable damping kit, GTR shocks (includes #1, #2, #3 pistons and stainless steel valves)**

Springs

5433A	**Spring, shock (red) (GTR) (1.4 rate double pink stripe)**
5434A	**Spring, shock (red) (GTR) (1.6 rate double blue stripe) (1 pair)**
5940	**Spring, shock (red) (GTR) (1.8 rate double green stripe) (1 pair)**
5941	**Spring, shock (red) (GTR) (2.0 rate double black stripe) (1 pair)**
5942	**Spring, shock (red) (GTR) (2.3 rate double purple stripe) (1 pair)**
5434	Spring, shock (white) (GTR) (1.6 rate blue) (1 pair)
5427	**Spring, shock (white) (GTR) (front 0.7 yellow) (1 pair)**
5428	**Spring, shock (white) (GTR) (front) (0.9 rate orange) (1 pair)**
5429	**Spring, shock (white) (GTR) (rear) (1.0 rate tan) (1 pair)**
5431	**Spring, shock (white) (GTR) (rear) (1.2 rate silver) (1 pair)**
5430	**Spring, shock (white) (GTR) (std. front) (1.1 rate green) (1 pair)**
5433	**Spring, shock (white) (GTR) (std. rear) (1.4 rate pink) (1 pair)**

Spur Gears & Pinion Gears

6492	**Gear, 29-T pinion (1.0 metric pitch) (fits 5mm shaft)/ set screw**
6493	Gear, 34-T pinion (1.0 metric pitch) (fits 5mm shaft)/ set screw
2577X	Screws, 3x10 button-head machine (hex drive) (stainless steel) (6)
6447	Spur gear, 46-tooth (1.0 metric pitch)
6448	Spur gear, 50-tooth (1.0 metric pitch)
6449	Spur gear, 54-tooth (1.0 metric pitch)

Steering Components

1552	Screws, 3x8mm cap-head machine (hex drive) (6)/washers (6)/ wrench
2728	Ball bearings (5x8x2.5mm) (2)
6445	Bellcrank brace/ draglink
2742	Rod ends, long (6)/ hollow ball connectors (6)
2746	Washers, 3x6mm metal (12)

Suspension Linkage

5525	Rod ends (12)/ hollow balls (12)
6834	Suspension pin set, complete (front and rear)
6441	Suspension pins, font & rear (4)/ tie bar bushings

Tires & Wheels

5854	Hub retainer, 17mm hubs, M4 X 0.7 (4) (use with #5853X, #6856X, #6469)
6468	**Tire glue, TRX® ultra premium**
6475	**Tires & wheels, assembled, glued (black, dished wheels, slick tires (S1 compound), foam inserts) (front) (2)**
6473	**Tires & wheels, assembled, glued (black, dished wheels, slick tires (S1 compound), foam inserts) (rear) (2)**
6479	Tires & wheels, assembled, glued (split-spoke, black chrome wheels, slick tires (S1 compound), foam inserts) (front) (2)
6477	Tires & wheels, assembled, glued (split-spoke, black chrome wheels, slick tires (S1 compound), foam inserts) (rear) (2)
6471	Tires, slicks (S1 compound) (front) (2)/ foam inserts (2)
6470	Tires, slicks (S1 compound) (rear) (2)/ foam inserts (2)
6469	Wheel hub, splined, 17mm, 6061-T6 aluminum (blue-anodized) (4)/ screw pin, 4x13mm (with threadlock) (4) (for 6mm axles)
5353	Wheel nuts, splined, 17mm (blue-anodized) (4)
6474	**Wheels, dished (white, dyeable) (front) (2)**
6472	**Wheels, dished (white, dyeable) (rear) (2)**
6478	Wheels, split-spoke (black chrome) (front) (2)
6476	Wheels, split-spoke (black chrome) (rear) (2)

Traxxas Team Items

2514	**Decal sheet, racing sponsors**
6160X	**DVD, Maxx® Power! Full Throttle Action (sleeve)**
9950	**Official Team Traxxas® racing decal set (flag logo/ 6-color)**
9909	**Traxxas® racing banner, red & black (3x7 feet)**

Traxxas Tools

3433X	**Body reamer (aluminum handle)**
3433	**Body reamer (plastic handle)**
3436	**Cap, body reamer**
3432	**Scissors, curved tip**
3431	**Scissors, straight tip**
8712	**Speed Bit Essentials Set, hex and nut driver, 7-piece, includes premium handle (medium), travel pouch, hex drivers (straight: 1.5mm, 2.0mm, 2.5mm) and nut drivers (5.0mm, 5.5mm, 7.0mm, and 8.0mm), 1/4" drive**
8721	**Speed bit handle, medium (one piece)**
8720	**Speed bit handle, premium, large (rubber overmold)**
8722	**Speed bit handle, premium, medium (rubber overmold)**
8710	**Speed Bit Master Set, hex and nut driver, 13-piece, includes premium handle (medium), travel pouch, hex drivers (straight: 1.5mm, 2.0mm, 2.5mm, 3.0mm), (ball-end: 2.0mm, 2.5mm, 3.0mm), and nut drivers (4.00mm, 4.50mm, 5.00mm, 5.50mm, 7.00mm, 8.00mm),**
8711	**Speed Bit Master Set, hex driver, 7-piece straight and ball end, includes premium handle (medium), travel pouch, hex drivers (straight: 1.5mm, 2.0mm, 2.5mm, 3.0mm) (ball end: 2.0mm, 2.5mm, 3.0mm), 1/4" drive**
8719	**Speed Bit Master Set, nut driver, 6-piece, includes premium handle (medium), travel pouch, and nut drivers (4.0mm, 4.5mm, 5.0mm, 5.5mm, 7.0mm, 8.0mm), 1/4" drive**
8716	**Speed Bit Set, hex driver, 2-piece ball-end (2.0mm, 2.5mm), 1/4" drive**
8716X	**Speed Bit Set, hex driver, 3-piece ball-end (2.0mm, 2.5mm, 3.0mm), 1/4" drive**
8715	**Speed Bit Set, hex driver, 3-piece straight (1.5mm, 2.0mm, 2.5mm), 1/4" drive**
8715X	**Speed Bit Set, hex driver, 4-piece straight (1.5mm, 2.0mm, 2.5mm, 3.0mm), 1/4" drive**

3415	**Tool set with pouch (includes 1.5mm, 2.0mm, 2.5mm, 3.0mm, 3.5mm, 4mm drivers/ 4mm, 5mm, 5.5mm, 7mm and 8mm nut drivers/ 2mm, 4mm, and 5mm slotted screwdrivers/ #00 Phillips, #0 Phillips, and #1 Phillips screwdrivers/ 4mm and 8mm wrench/ driver handle**

Turnbuckles & Threaded Rods

3643X	**Camber links, front (TUBES blue-anodized, 7075-T6 aluminum, stronger than titanium) (83mm) (2)/ rod ends, rear (4)/ rod ends, front (4)/ aluminum wrench (1)**
3643G	**Camber links, front (TUBES green-anodized, 7075-T6 aluminum, stronger than titanium) (83mm) (2)/ rod ends, rear (4)/ rod ends, front (4)/ aluminum wrench (1)**
3643R	**Camber links, front (TUBES red-anodized, 7075-T6 aluminum, stronger than titanium) (83mm) (2)/ rod ends, rear (4)/ rod ends, front (4)/ aluminum wrench (1)**
5525	Rod ends (12)/ hollow balls (12)
3643	Turnbuckles, camber link, 49mm (82mm center to center) (assembled with rod ends and hollow balls) (1 left, 1 right)
5539	Turnbuckles, camber links, 58mm (assembled with rod ends and hollow balls) (2)

If you have questions or need technical assistance, call Traxxas at:

1-888-TRAXXAS

(1-888-872-9927) (U.S. residents only)

For orders, calls outside the U.S., and other information, call 972-549-3000, or fax to 972-549-3011 e-mail Traxxas at support@Traxxas.com

TRAXXAS.com

4TEC 2.0 AWD CHASSIS

MODEL 83076-4/83024-4

1/10 SCALE ON-ROAD CHASSIS



70+ mph*



ALL-WHEEL DRIVE SYSTEM



VELINEON BRUSHLESS POWER SYSTEM



TQi 2.4GHz TRANSMITTER

EXTREME ON-ROAD PERFORMANCE

The Traxxas 4-Tec 2.0 AWD Chassis combines insightful design touches with precision engineering to create a thoroughly modern platform. No aspect was overlooked. It's not just our most adjustable chassis ever; it's built to be driven! A highly efficient shaft driven all-wheel drive system rides on sealed bearings and provides maximum acceleration and responsiveness.

*With included optional pinion gear

4TEC 2.0 AWD CHASSIS

Velineon EXTREME BRUSHLESS POWER SYSTEM

Front Assembly

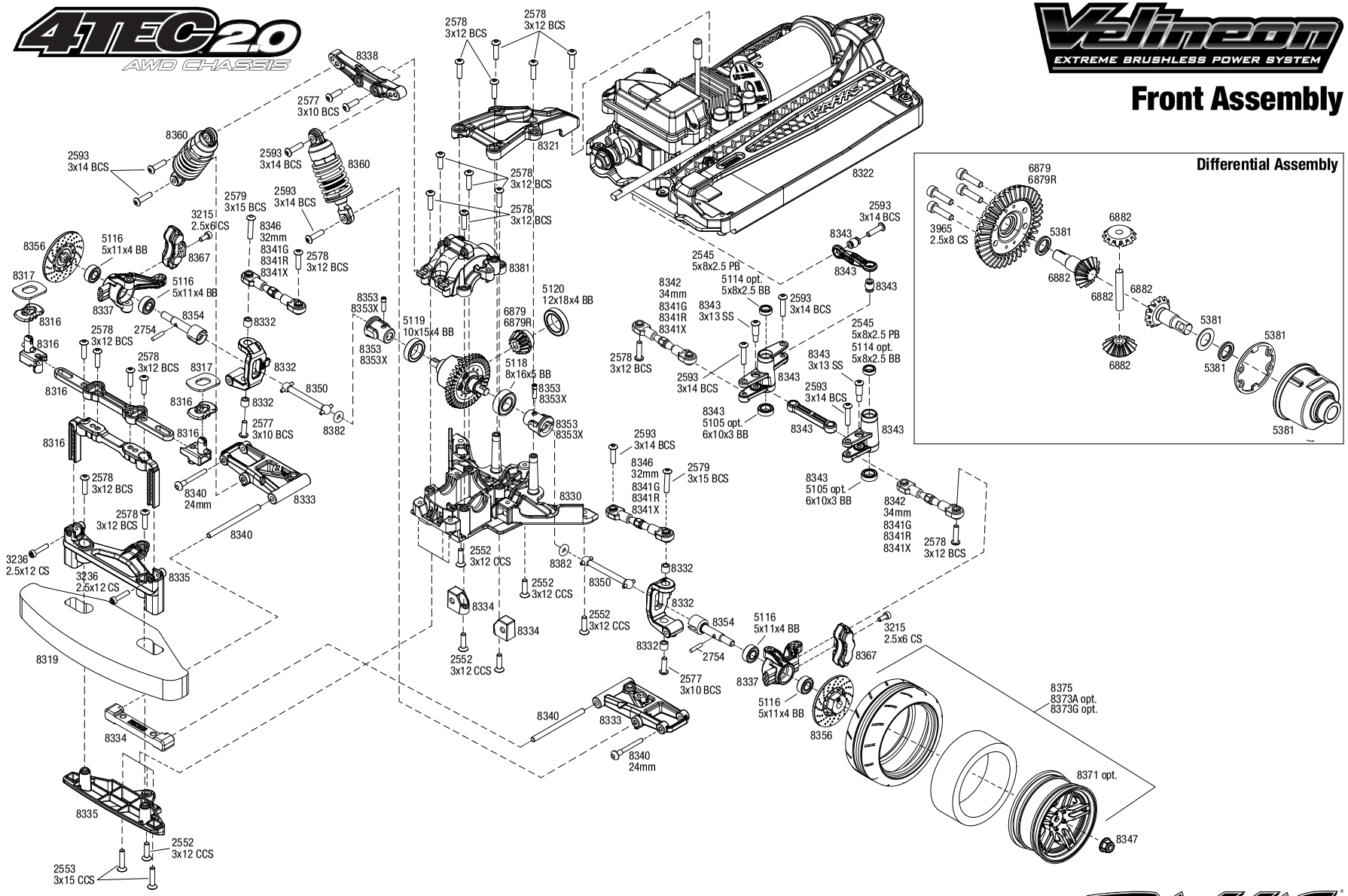

REV 180906-R06

Specifications on this page are subject to change without notice. Every attempt has been made to ensure the accuracy of this drawing; however, Traxxas cannot be held responsible for typographical or other errors.

See Parts List for a complete listing of optional accessories.

Questions? **Call toll-free, 1-888-TRAXXAS**

Velineon EXTREME BRUSHLESS POWER SYSTEM

4TEC 2.0 AWD CHASSIS

Chassis Assembly

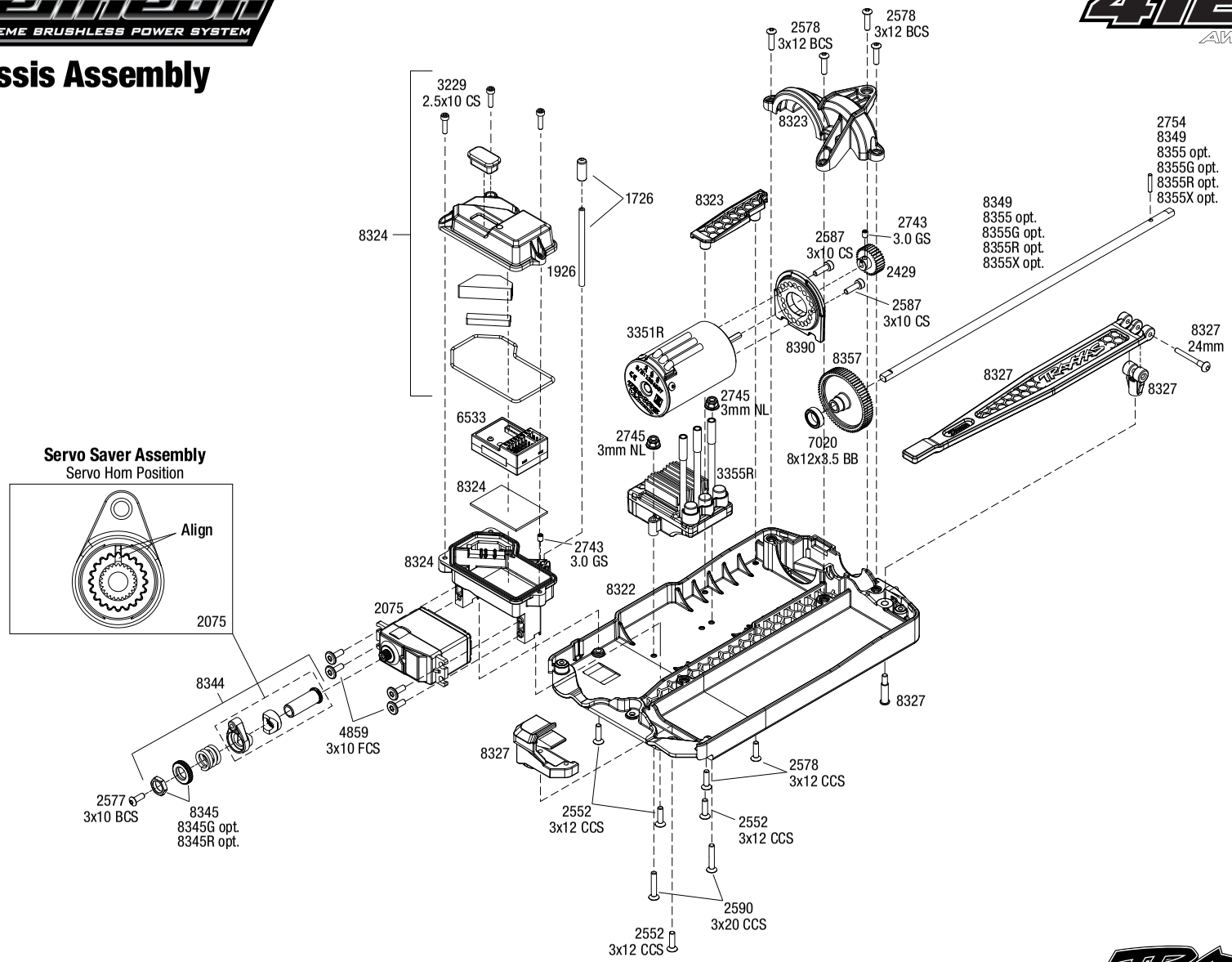

See Parts List for a complete listing of optional accessories.

Specifications on this page are subject to change without notice. Every attempt has been made to ensure the accuracy of this drawing; however, Traxxas cannot be held responsible for typographical or other errors.

REV 180906-R06

TRAXXAS

Rear Assembly

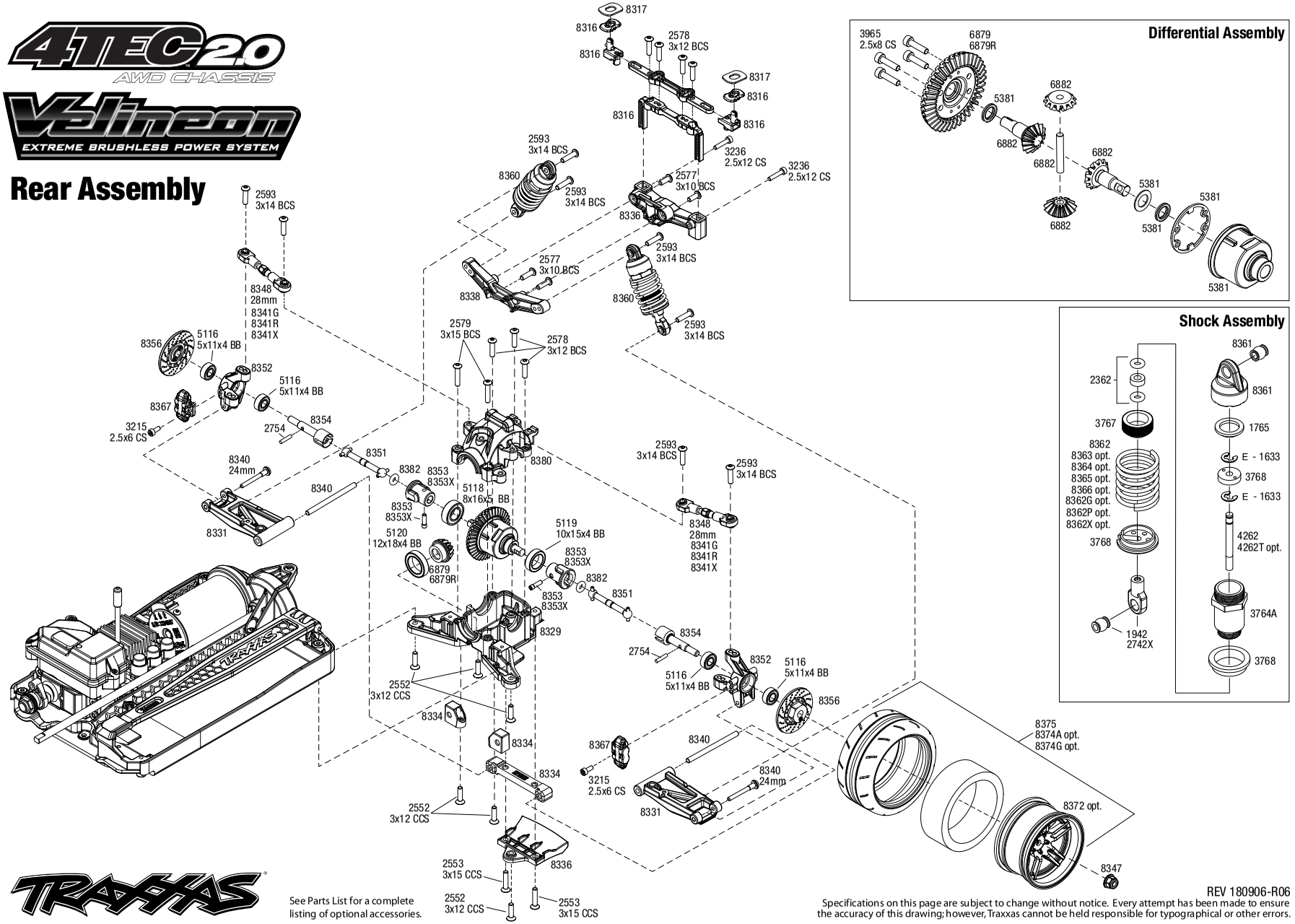

Differential Assembly

Shock Assembly

See Parts List for a complete listing of optional accessories.

REV 180906-R06

Specifications on this page are subject to change without notice. Every attempt has been made to ensure the accuracy of this drawing; however, Traxxas cannot be held responsible for typographical or other errors.

4-TEC 2.0 (83076-4/ 83024-4)

4-TEC 2.0 AWD CHASSIS

Modular Assembly

REV 180906-R06

TRAXXAS

Specifications on this page are subject to change without notice. Every attempt has been made to ensure the accuracy of this drawing; however, Traxxas cannot be held responsible for typographical or other errors.

See Parts List for a complete listing of optional accessories.

PARTS SHOWN IN BOLD ARE OPTIONAL ACCESSORIES.

Part categories and individual part listings are arranged alphabetically.

Bearings & Bushings

5119 Ball bearings, blue rubber sealed (10x15x4mm) (2)
5120 Ball bearings, blue rubber sealed (12x18x4mm) (2)
5116 Ball bearings, blue rubber sealed (5x11x4mm) (2)
5114 Ball bearings, blue rubber sealed (5x8x2.5mm) (2)
5105 Ball bearings, blue rubber sealed (6x10x3mm) (2)
5118 Ball bearings, blue rubber sealed (8x16x5mm) (2)

Body & Accessories

8319 Body bumper, foam
1834A Body clips, black (12) (standard size)
8315 Body mounts, front & rear (fits #8311 body) (2)
8316 Body mounts, front & rear/ body mount posts/ body mount sliders
8317 Body washers, foam
8391 Body, Cadillac CTS-V (clear, requires painting)/ decal sheet (includes side mirrors, spoiler, & mounting hardware)
8391A Body, Cadillac CTS-V, blue (painted, decals applied)
8391X Body, Cadillac CTS-V, silver (painted, decals applied)
8386 Body, Chevrolet Corvette Z06 (clear, requires painting)/ decal sheet (includes side mirrors, spoiler, & mounting hardware)
8386X Body, Chevrolet Corvette Z06, blue (painted, decals applied)
8386A Body, Chevrolet Corvette Z06, graphite (painted, decals applied)
8386R Body, Chevrolet Corvette Z06, red (painted, decals applied)
8311 Body, Ford GT® (clear, requires painting)/ decal sheet (includes tail lights, exhaust tips, & mounting hardware)
8311X Body, Ford GT®, black (painted, decals applied) (tail lights, exhaust tips, & mounting hardware (part #8314) sold separately)
8311A Body, Ford GT®, blue (painted, decals applied) (tail lights, exhaust tips, & mounting hardware (part #8314) sold separately)
8311R Body, Ford GT®, red (painted, decals applied) (tail lights, exhaust tips, & mounting hardware (part #8314) sold separately)
8312 Body, Ford Mustang (clear, requires painting)/ window masks/ decal sheet
8312X Body, Ford Mustang, black (painted, decals applied)
8336 Bumper, rear (1)/ rear body mount (1)
8393 Decal sheet, Cadillac CTS-V
8387 Decal sheets, Chevrolet Corvette Z06
8392 Mirrors, side, black (left & right)/ mirror retainers (2)/ body clips (4)/ o-rings (4)/ spoiler, black/ spoiler retainer (1)/ 1.6x5 BCS (self-tapping) (3) (fits #8391 body)
8388 Mirrors, side, black (left & right)/ mirror retainers (2)/ spoiler, black/ spoiler retainer (1)/ 1.6x5 BCS (self-tapping) (3)/ 2.6x8 BCS (self-tapping) (2) (fits #8386 body)
8314 Tail lights (2)/ tail light mounts (4) / exhaust tips (2)/ exhaust tip mount (1)/ 3x10 flat-head screws (2)/ 3x8 BCS (2)

Brake Components

8367 Brake calipers (red), front (2)/ rear (2)
8356 Wheel hubs, hex (disc brake rotors) (4)

Center Driveline

8381 Housing, differential (front)
8380 Housing, differential (rear)

Chassis & Attachments

8327 Battery hold-down/ battery clip/ hold-down post/ screw pin/ pivot post screw
8319 Body bumper, foam
8324 Box, receiver (sealed) (steering servo mount)/ receiver cover/ access plug/ foam pads/ silicone grease/ 2.5x10 CS (3)
8335 Bumper, front (1 each, upper & lower)
8336 Bumper, rear (1)/ rear body mount (1)
8322 Chassis
8321 Chassis brace (front)
8323 Gear cover (rear chassis brace)/ wire retainer

Differential Components

5381 Carrier, differential/ x-ring gaskets (2)/ ring gear gasket/ 6x10x0.5 TW
5136X Differential oil kit (1 each: 10K, 30K, 50K weights)
8381 Housing, differential (front)
8380 Housing, differential (rear)
8379 Housing, spool / spool shaft/ bushing
6879R Ring gear, differential/ pinion gear, differential (machined, spiral cut) (rear)
6879 Ring gear, differential/ pinion gear, differential (rear)

Driveline Components

8353X Drive cups, inner (2) (steel constant-velocity driveshafts)/ screw pins (2)
8353 Drive cups, inner (2)/ screw pins (2)
8355X Driveshaft, center, aluminum (blue-anodized)
8355G Driveshaft, center, aluminum (green-anodized)
8355R Driveshaft, center, aluminum (red-anodized)
8355 Driveshaft, center, aluminum / pin
8349 Driveshaft, center, steel/ pin
8350 Driveshaft, front (2)
8351 Driveshaft, rear (2)
8350X Driveshafts, steel constant-velocity (assembled), front (2)
8351X Driveshafts, steel constant-velocity (assembled), rear (2)
8382 O-rings (12)
2754 Stub axle pins (4)
8354 Stub axles (front or rear) (2)
8356 Wheel hubs, hex (disc brake rotors) (4)

Front Suspension & Steering

8330 Bulkhead, front
8332 Caster blocks (c-hubs) (2)/ kingpin bushings (4)
8334 Mounts, suspension arms (front & rear)/ hinge pin retainers (4)
8334X Mounts, suspension arms, aluminum (blue-anodized) (front & rear)/ hinge pin retainers (12)/ inserts (6)
8334G Mounts, suspension arms, aluminum (green-anodized) (front & rear)/ hinge pin retainers (12)/ inserts (6)
8334R Mounts, suspension arms, aluminum (red-anodized) (front & rear)/ hinge pin retainers (12)/ inserts (6)
5347 Rod ends, Revo® (large) with hollow balls (12)
8345 Servo saver nuts, aluminum, blue-anodized (hex (1), serrated (1))
8345G Servo saver nuts, aluminum, green-anodized (hex (1), serrated (1))
8345R Servo saver nuts, aluminum, red-anodized (hex (1), serrated (1))
8344 Servo saver/ servo saver spring/ servo horn, steering
8338 Shock towers, front & rear
8343 Steering bellcranks/ hardware
8337 Steering block (2)
2754 Stub axle pins (4)
8354 Stub axles (front or rear) (2)
8333 Suspension arms, front (left & right)
8340 Suspension pin set, complete (front & rear)
8398 Sway bar kit, 4-Tec® 2.0 (front and rear) (includes front and rear sway bars and adjustable linkage)
8342 Toe links, steel (34mm) (2)
8341X Turnbuckles, aluminum (blue-anodized), camber links, 32mm (front) (2)/ camber links, 28mm (rear) (2)/ toe links, 34mm (2)/ aluminum wrench
8341G Turnbuckles, aluminum (green-anodized), camber links, 32mm (front) (2)/ camber links, 28mm (rear) (2)/ toe links, 34mm (2)/ aluminum wrench
8341R Turnbuckles, aluminum (red-anodized), camber links, 32mm (front) (2)/ camber links, 28mm (rear) (2)/ toe links, 34mm (2)/ aluminum wrench

Hardware

1834A Body clips, black (12) (standard size)
8347 Nuts, 4mm flanged nylon locking, serrated (black) (10)
5347 Rod ends, Revo® (large) with hollow balls (12)
3229 Screws, 2.5x10mm cap-head machine (hex drive) (6)
3236 Screws, 2.5x12mm cap-head machine (6)
3215 Screws, 2.5x6mm cap-head machine (hex drive) (6)
2577 Screws, 3x10mm button-head machine (hex drive) (6)
2587 Screws, 3x10mm cap-head machine (6) (no washer)
2551 Screws, 3x10mm countersunk machine (6) (hex drive)
4859 Screws, 3x10mm flat-head machine (hex drive) (4)
2578 Screws, 3x12mm button-head machine (hex drive) (6)
2552 Screws, 3x12mm countersunk machine (6) (hex drive)
2593 Screws, 3x14mm button-head machine (hex drive) (6)
2579 Screws, 3x15mm button-head machine (hex drive) (6)
2553 Screws, 3x15mm countersunk machine (6) (hex drive)
8356 Wheel hubs, hex (disc brake rotors) (4)

Motors & Electronics

2260 BEC assembly (complete)
3340 Cooling fan, Velineon® VXL-3s ESC
2072A Gear set (for 2070, 2075 servos)
3354R Motor cover, endbell (Velineon® 3500)

4-TEC 2.0 (83076-4/ 83024-4)

3351R Motor, Velineon® 3500, brushless (assembled with 12-gauge wire and gold-plated bullet connectors)
8390 Plate, motor
3352R Rebuild kit, Velineon® 3500 (includes plastic endbell, 5x11x4mm ball bearings (2), 2.5x5mm BCS (with threadlock) (4), rear bushing)
2074 Servo case/gaskets (for 2056 and 2075 waterproof servos)
8345 Servo saver nuts, aluminum, blue-anodized (hex (1), serrated (1))
8345G Servo saver nuts, aluminum, green-anodized (hex (1), serrated (1))
8345R Servo saver nuts, aluminum, red-anodized (hex (1), serrated (1))
8344 Servo saver/ servo saver spring/ servo horn, steering
2075R Servo, digital high-speed, metal gear (ball bearing), waterproof
2075 Servo, digital high-torque (ball bearing), waterproof
2075X Servo, digital high-torque, metal gear (ball bearing), waterproof
3350R Velineon® VXL-3s Brushless Power System, waterproof (includes VXL-3s waterproof ESC, Velineon 3500 motor, and speed control mounting plate (part #3725R))
3355R Velineon® VXL-3s Electronic Speed Control, waterproof (brushless) (fwd/rev/brake)

Radio System, Batteries & Chargers

2849X 4000mAh 11.1v 3-Cell 25C LiPo Battery
2872X 5000mAh 11.1v 3-Cell 25C LiPo Battery
2842X 5000mAh 7.4v 2-Cell 25C LiPo Battery
2843X 5800mAh 7.4v 2-Cell 25C LiPo Battery
2869X 7600mAh 7.4v 2-Cell 25C LiPo Battery
2976 AC to DC converter, 40W
2938X Adapter, Traxxas® iD® LiPo battery (adapts Traxxas iD batteries to separate balance ports)
2943 Battery charge indicators (green (4), blue (4), grey (4))
6548 Battery door, transmitter (replacement for #6516, 6517, 6528, 6529, 6530 transmitters)
2914 Battery, Power Cell AA Alkaline (4)
2923X Battery, Power Cell, 3000mAh (NiMH, 7-C flat, 8.4V)
2940X Battery, Series 3 Power Cell, 3300mAh (NiMH, 7-C flat, 8.4V)
2950X Battery, Series 4 Power Cell, 4200mAh (NiMH, 7-C flat, 8.4V)
2960X Battery, Series 5 Power Cell, 5000mAh (NiMH, 7-C flat, 8.4V)
2983 Battery/charger completer pack (includes #2969 2-amp NiMH peak detecting AC charger (1), #2923X 3000mAh 8.4V 7-cell NiMH battery (1))
2992 Battery/charger completer pack (includes #2970 iD® charger (1), #2843X 5800mAh 7.4V 2-cell 25C LiPo battery (1))
2994 Battery/charger completer pack (includes #2970 iD® charger (1), #2849X 4000mAh 11.1v 3-Cell 25C LiPo Battery (1))
2260 BEC assembly (complete)
2975 Charger, DC, 4 amp (6 - 7 cell, 7.2 - 8.4 volt, NiMH)
2972 Charger, EZ-Peak® Dual, 100W, NiMH/LiPo with iD® Auto Battery Identification
2973 Charger, EZ-Peak® Live Dual, 200W, NiMH/LiPo with iD® Auto Battery Identification
2971 Charger, EZ-Peak® Live, 100W, NiMH/LiPo with iD® Auto Battery Identification
2970 Charger, EZ-Peak® Plus, 4 amp, NiMH/LiPo with iD® Auto Battery Identification
6525 Communication link, telemetry expander
6541 Connector, power tap (with cable) (long)/ wire tie
6512 Cover plate, Traxxas Link™ Wireless Module
2978 Fuse, charger, 5A (2) (for #2974, 2975, 2977)
2072A Gear set (for 2070, 2075 servos)
2968X LiPo cell voltage checker/balancer (includes #2938X adapter for Traxxas® iD® batteries)
2968 LiPo cell voltage checker/balancer (requires #2938X adapter for Traxxas® iD® batteries)
6560 Mount, telemetry expander (fits 4-Tec® 2.0)
6535 Mount, temperature sensor (electric motors)/ wire tie/ thermal pad
6533 Receiver, micro, TQi 2.4GHz with telemetry & TSM (5-channel)
6552 Seal kit, expander box (includes o-ring, seals, and silicone grease)
6526 Sensor, auto-detectable, temperature
6527 Sensor, auto-detectable, voltage
6521 Sensor, temperature and voltage (long)
2074 Servo case/gaskets (for 2056 and 2075 waterproof servos)
8345 Servo saver nuts, aluminum, blue-anodized (hex (1), serrated (1))
8345G Servo saver nuts, aluminum, green-anodized (hex (1), serrated (1))
8345R Servo saver nuts, aluminum, red-anodized (hex (1), serrated (1))
8344 Servo saver/ servo saver spring/ servo horn, steering
2075R Servo, digital high-speed, metal gear (ball bearing), waterproof
2075 Servo, digital high-torque (ball bearing), waterproof
2075X Servo, digital high-torque, metal gear (ball bearing), waterproof
6553X Telemetry expander 2.0 and GPS module 2.0, TQi radio system
6550X Telemetry expander 2.0, TQi radio system (for use only with #6551X GPS module)
6551X Telemetry GPS module 2.0, TQi radio system (for use only with #6550X telemetry expander)
6509R TQi 2.4 GHz High Output radio system, 2-channel, Traxxas Link™ enabled, TSM (2-ch transmitter, 5-ch micro receiver)
6507R TQi 2.4 GHz High Output radio system, 4-channel with Traxxas Link™ Wireless Module, TSM (4-ch transmitter, 5-ch micro receiver)
6528 Transmitter, TQi Traxxas Link™ enabled, 2.4GHz high output, 2-channel (transmitter only)
6529 Transmitter, TQi Traxxas Link™ enabled, 2.4GHz high output, 3-channel (transmitter only)
6530 Transmitter, TQi Traxxas Link™ enabled, 2.4GHz high output, 4-channel (transmitter only)
6511 Traxxas Link™ Wireless Module
3355R Velineon® VXL-3s Electronic Speed Control, waterproof (brushless) (fwd/rev/brake)

Rear Suspension

8329 Bulkhead, rear
8352 Carriers, stub axle (left & right)
8334 Mounts, suspension arms (front & rear)/ hinge pin retainers (4)
8334X Mounts, suspension arms, aluminum (blue-anodized) (front & rear)/ hinge pin retainers (12)/ inserts (6)
8334G Mounts, suspension arms, aluminum (green-anodized) (front & rear)/ hinge pin retainers (12)/ inserts (6)
8334R Mounts, suspension arms, aluminum (red-anodized) (front & rear)/ hinge pin retainers (12)/ inserts (6)
5347 Rod ends, Revo® (large) with hollow balls (12)
8338 Shock towers, front & rear
2754 Stub axle pins (4)
8354 Stub axles (front or rear) (2)
8331 Suspension arms, rear (left & right)
8340 Suspension pin set, complete (front & rear)
8398 Sway bar kit, 4-Tec® 2.0 (front and rear) (includes front and rear sway bars and adjustable linkage)
8341X Turnbuckles, aluminum (blue-anodized), camber links, 32mm (front) (2)/ camber links, 28mm (rear) (2)/ toe links, 34mm (2)/ aluminum wrench
8341G Turnbuckles, aluminum (green-anodized), camber links, 32mm (front) (2)/ camber links, 28mm (rear) (2)/ toe links, 34mm (2)/ aluminum wrench
8341R Turnbuckles, aluminum (red-anodized), camber links, 32mm (front) (2)/ camber links, 28mm (rear) (2)/ toe links, 34mm (2)/ aluminum wrench

Shocks (Pro-level Aluminum)

2658 Big Bore shocks (short) (hard-anodized & PTFE-coated T6 aluminum) (assembled with TiN shafts w/ springs)(f/r)(2) (Note: Assembled with 32mm shafts, 29mm shafts included)
2669 Piston head set (2-hole (2)/ 3-hole (2))/ shock mounting bushings & washers (2) (Big Bore Shocks)
1942 Rod ends (16 long & 4 short)/ hollow ball connectors (18)/ ball screws (2)
2742X Rod ends, short (6)/ hollow balls (6)
8361 Shock caps (black) (4) (assembled with hollow balls)
2667 Shock caps, aluminum (Big Bore Shocks) (2)
4261T Shock shafts, hardened steel, titanium nitride coated (29mm) (front) (2)
4262T Shock shafts, hardened steel, titanium nitride coated (32mm) (2)
4261 Shock shafts, steel, chrome finish (29mm) (front) (2)
4262 Shock shafts, steel, chrome finish (32mm) (2)
1765 Silicone diaphragms (4)
1666 Silicone shock oil (30 wt)
2668 Spring retainers, upper & lower (2)/ spring pre-load spacers: 1mm (4)/ 1.5mm (2)/ 2mm (2)/ 4mm (2)/ 8mm (2) (Big Bore Shocks)

Shocks (Ultra Shocks)

1942 Rod ends (16 long & 4 short)/ hollow ball connectors (18)/ ball screws (2)
2742X Rod ends, short (6)/ hollow balls (6)
8361 Shock caps (black) (4) (assembled with hollow balls)
8362X Spring, shock (blue) (3.7 rate) (2)
8362G Spring, shock (green) (3.7 rate) (2)
8362P Spring, shock (pink) (3.7 rate) (2)
8366 Spring, shock (red) (2.8 rate, white stripe) (2)
8365 Spring, shock (red) (3.325 rate, orange stripe) (2)
8362 Spring, shock (red) (3.7 rate) (2)
8363 Spring, shock (red) (4.075 rate, green stripe) (2)
8364 Spring, shock (red) (4.4 rate, black stripe) (2)
8360 Ultra Shocks (grey) (short) (includes spring pre-load spacers) (2)

Spur Gears & Pinion Gears

2728	Ball bearings (5x8x2.5mm) (2)
8323	Gear cover (rear chassis brace)/ wire retainer
2419	**Gear, 19-T pinion (48-pitch) / set screw**
2421	**Gear, 21-T pinion (48-pitch) / set screw**
2422	**Gear, 22-T pinion (48-pitch) / set screw**
2423	**Gear, 23-T pinion (48-pitch) / set screw**
2424	**Gear, 24-T pinion (48-pitch) / set screw**
2426	**Gear, 26-T pinion (48-pitch)/set screw**
2429	Gear, 29-T pinion (48-pitch)/ set screw
2435	Gear, 35-T pinion (48-pitch)/ set screw
4725	**Gear, pinion (25-tooth) (48-pitch) / set screw**
4728	**Gear, pinion (28-tooth) (48-pitch)/ set screw**
8358	Spur gear, 55-tooth
8359	**Spur gear, 62-tooth**
8357	Spur gear, 70-tooth

Steering Components

5347	Rod ends, Revo® (large) with hollow balls (12)
8345	Servo saver nuts, aluminum, blue-anodized (hex (1), serrated (1))
8345G	**Servo saver nuts, aluminum, green-anodized (hex (1), serrated (1))**
8345R	**Servo saver nuts, aluminum, red-anodized (hex (1), serrated (1))**
8344	Servo saver/ servo saver spring/ servo horn, steering
8343	Steering bellcranks/ hardware
8342	Toe links, steel (34mm) (2)

Suspension Linkage

5347	Rod ends, Revo® (large) with hollow balls (12)
8341X	**Turnbuckles, aluminum (blue-anodized), camber links, 32mm (front) (2)/ camber links, 28mm (rear) (2)/ toe links, 34mm (2)/ aluminum wrench**
8341G	**Turnbuckles, aluminum (green-anodized), camber links, 32mm (front) (2)/ camber links, 28mm (rear) (2)/ toe links, 34mm (2)/ aluminum wrench**
8341R	**Turnbuckles, aluminum (red-anodized), camber links, 32mm (front) (2)/ camber links, 28mm (rear) (2)/ toe links, 34mm (2)/ aluminum wrench**

Team Traxxas Items

2514	**Decal sheet, racing sponsors**
9950	**Official Team Traxxas® racing decal set (flag logo/ 6-color)**
9909	**Traxxas® racing banner, red & black (3x7 feet)**

Tires & Wheels

8375	Tires & wheels, assembled, glued (split-spoke black chrome wheels, 1.9" Response tires, foam inserts) (front (2), rear (extra wide) (2)) (VXL rated)
8378	**Tires and wheels, assembled, glued (split-spoke black chrome wheels, 1.9" Drift tires) (front and rear)**
8376G	**Tires and wheels, assembled, glued (split-spoke green wheels, 1.9" Drift tires) (front)**
8377G	**Tires and wheels, assembled, glued (split-spoke green wheels, 1.9" Drift tires) (rear)**
8374G	**Tires and wheels, assembled, glued (split-spoke green wheels, 1.9" Response tires) (extra wide, rear) (2) (VXL rated)**
8373G	**Tires and wheels, assembled, glued (split-spoke green wheels, 1.9" Response tires) (front) (2) (VXL rated)**
8376A	**Tires and wheels, assembled, glued (split-spoke orange wheels, 1.9" Drift tires) (front)**
8377A	**Tires and wheels, assembled, glued (split-spoke orange wheels, 1.9" Drift tires) (rear)**
8374A	**Tires and wheels, assembled, glued (split-spoke orange wheels, 1.9" Response tires) (extra wide, rear) (2) (VXL rated)**
8373A	**Tires and wheels, assembled, glued (split-spoke orange wheels, 1.9" Response tires) (front) (2) (VXL rated)**
8371	**Wheels, 1.9" split-spoke (black chrome) (front) (2)**
8372	**Wheels, 1.9" split-spoke (black chrome) (wide, rear) (2)**

Traxxas Tools

3433X	**Body reamer (aluminum handle)**
3433	**Body reamer (plastic handle)**
3436	**Cap, body reamer**
3432	**Scissors, curved tip**
3431	**Scissors, straight tip**
8712	**Speed Bit Essentials Set, hex and nut driver, 7-piece, includes premium handle (medium), travel pouch, hex drivers (straight: 1.5mm, 2.0mm, 2.5mm) and nut drivers (5.0mm, 5.5mm, 7.0mm, and 8.0mm), 1/4" drive**
8721	**Speed bit handle, medium (one piece)**
8720	**Speed bit handle, premium, large (rubber overmold)**
8722	**Speed bit handle, premium, medium (rubber overmold)**
8710	**Speed Bit Master Set, hex and nut driver, 13-piece, includes premium handle (medium), travel pouch, hex drivers (straight: 1.5mm, 2.0mm, 2.5mm, 3.0mm), (ball-end: 2.0mm, 2.5mm, 3.0mm), and nut drivers (4.00mm, 4.50mm, 5.00mm, 5.50mm, 7.00mm, 8.00mm),**
8711	**Speed Bit Master Set, hex driver, 7-piece straight and ball end, includes premium handle (medium), travel pouch, hex drivers (straight: 1.5mm, 2.0mm, 2.5mm, 3.0mm) (ball end: 2.0mm, 2.5mm, 3.0mm), 1/4" drive**
8719	**Speed Bit Master Set, nut driver, 6-piece, includes premium handle (medium), travel pouch, and nut drivers (4.0mm, 4.5mm, 5.0mm, 5.5mm, 7.0mm, 8.0mm), 1/4" drive**
8716	**Speed Bit Set, hex driver, 2-piece ball-end (2.0mm, 2.5mm), 1/4" drive**
8716X	**Speed Bit Set, hex driver, 3-piece ball-end (2.0mm, 2.5mm, 3.0mm), 1/4" drive**
8715	**Speed Bit Set, hex driver, 3-piece straight (1.5mm, 2.0mm, 2.5mm), 1/4" drive**
8715X	**Speed Bit Set, hex driver, 4-piece straight (1.5mm, 2.0mm, 2.5mm, 3.0mm), 1/4" drive**
3415	**Tool set with pouch (includes 1.5mm, 2.0mm, 2.5mm, 3.0mm, 3.5mm, 4mm drivers/ 4mm, 5mm, 5.5mm, 7mm and 8mm nut drivers/ 2mm, 4mm, and 5mm slotted screwdrivers/ #00 Phillips, #0 Phillips, and #1 Phillips screwdrivers/ 4mm and 8mm wrench/ driver handle**

Turnbuckles & Threaded Rods

8341	**Camber link/toe link set (plastic/ non-adjustable) (front & rear)**
8346	Camber links, steel, front (32mm) (2)
8348	Camber links, steel, rear (28mm) (2)
8342	Toe links, steel (34mm) (2)
8341X	**Turnbuckles, aluminum (blue-anodized), camber links, 32mm (front) (2)/ camber links, 28mm (rear) (2)/ toe links, 34mm (2)/ aluminum wrench**
8341G	**Turnbuckles, aluminum (green-anodized), camber links, 32mm (front) (2)/ camber links, 28mm (rear) (2)/ toe links, 34mm (2)/ aluminum wrench**
8341R	**Turnbuckles, aluminum (red-anodized), camber links, 32mm (front) (2)/ camber links, 28mm (rear) (2)/ toe links, 34mm (2)/ aluminum wrench**

If you have questions or need technical assistance, call Traxxas at:

1-888-TRAXXAS

(1-888-872-9927) (U.S. residents only)

For orders, calls outside the U.S., and other information, call 972-549-3000, or fax to 972-549-3011 e-mail Traxxas at support@Traxxas.com

TRAXXAS.com

REV. 201002 1230

MUSTANG GT

MODEL 83044-4

1/10 SCALE ON-ROAD CAR



30+ mph*

ALL-WHEEL DRIVE SYSTEM

TITAN 12T 550 MOTOR AND XL-5 ELECTRONIC SPEED CONTROL

TQ 2.4GHz TRANSMITTER

Official Licensed Product

All other copyrights or trademarks are the property of their respective owners and are being used under license.

Ford Motor Company Trademarks and Trade Dress used under license to Traxxas.

STYLE AND PERFORMANCE

Officially licensed from Ford Motor Company, a global automotive industry leader, Traxxas' new Ford Mustang GT puts you behind the wheel of this legendary car. Titan 550 horsepower stays true to the Mustang's performance heritage, cranking out tire-shredding torque for instant acceleration and exciting power slides. Hang it out in the turns and hustle down the straights with the perfect blend of power and traction—AWD makes it easy to ride the ragged edge of oversteer as though you had the pedal to the floor in a full-size Mustang GT.

*With included optional pinion gear

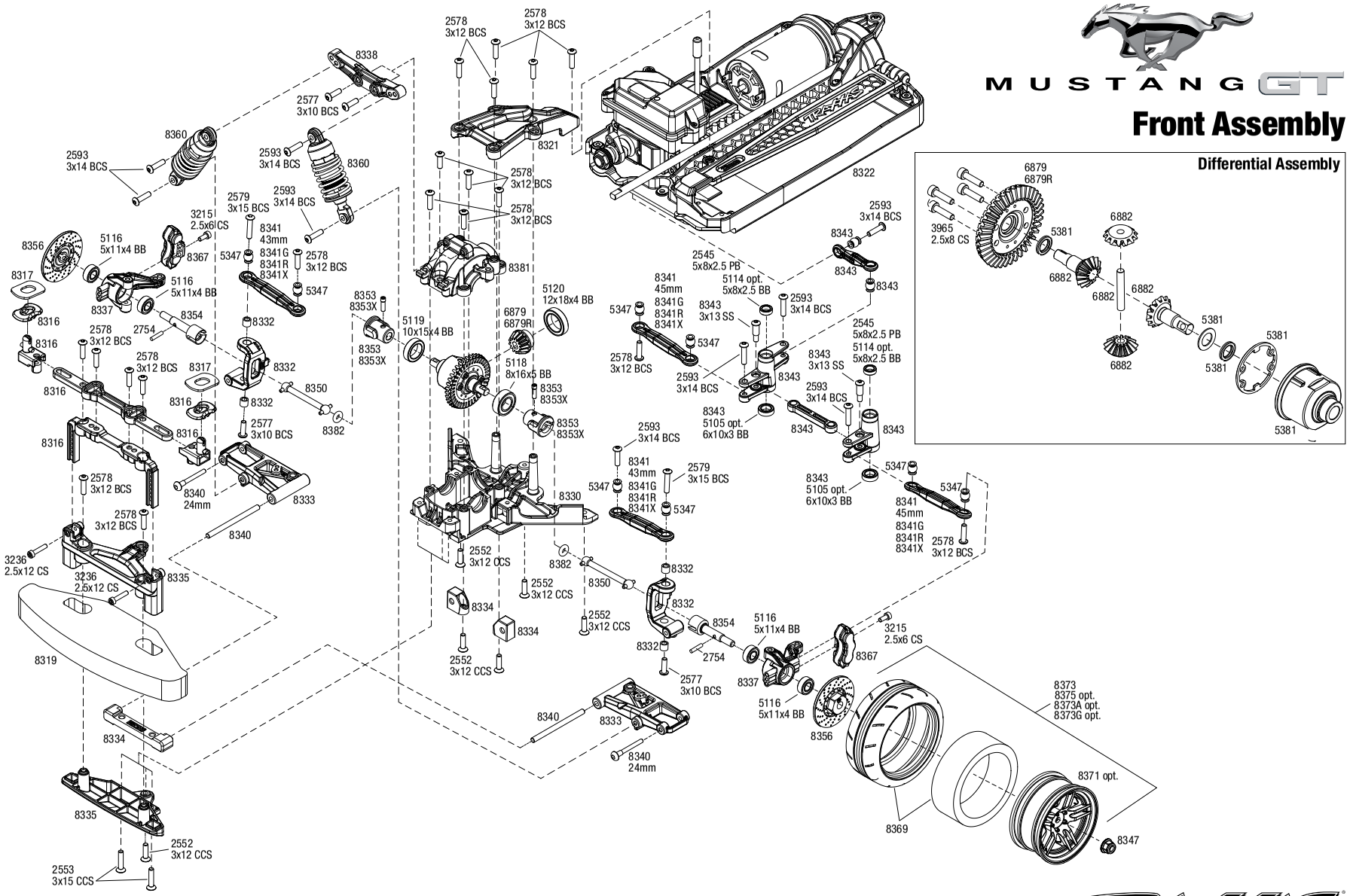

MUSTANG GT

Front Assembly

REV 201006-R07

Specifications on this page are subject to change without notice. Every attempt has been made to ensure the accuracy of this drawing; however, Traxxas cannot be held responsible for typographical or other errors.

See Parts List for a complete listing of optional accessories.

Questions? **Call toll-free, 1-888-TRAXXAS**

Questions? Call toll-free, 1-888-TRAXXAS

MUSTANG GT

Chassis Assembly

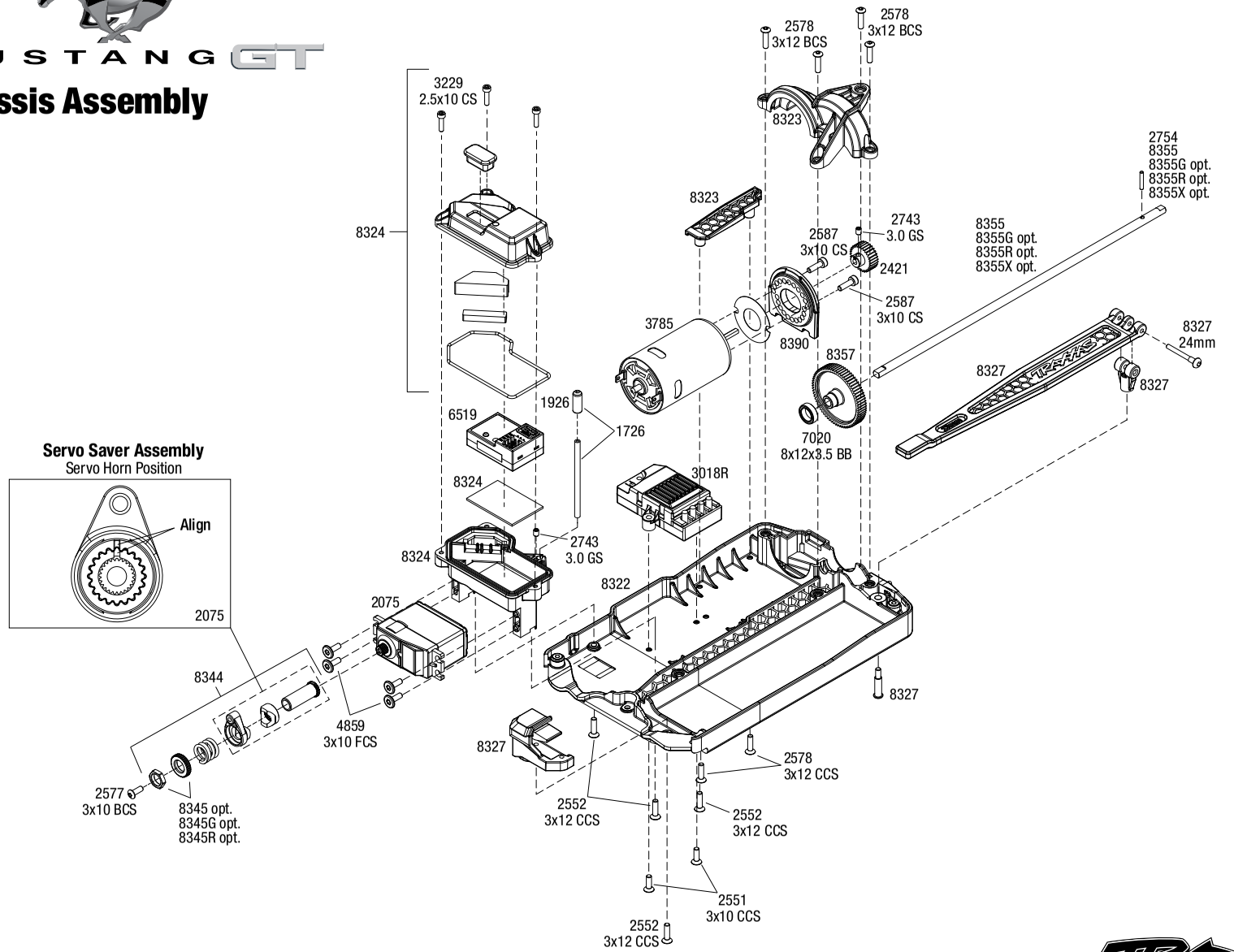

Servo Saver Assembly
Servo Horn Position

See Parts List for a complete listing of optional accessories.

Specifications on this page are subject to change without notice. Every attempt has been made to ensure the accuracy of this drawing; however, Traxxas cannot be held responsible for typographical or other errors.

REV 201006-R07

TRAXXAS

MUSTANG GT

Rear Assembly

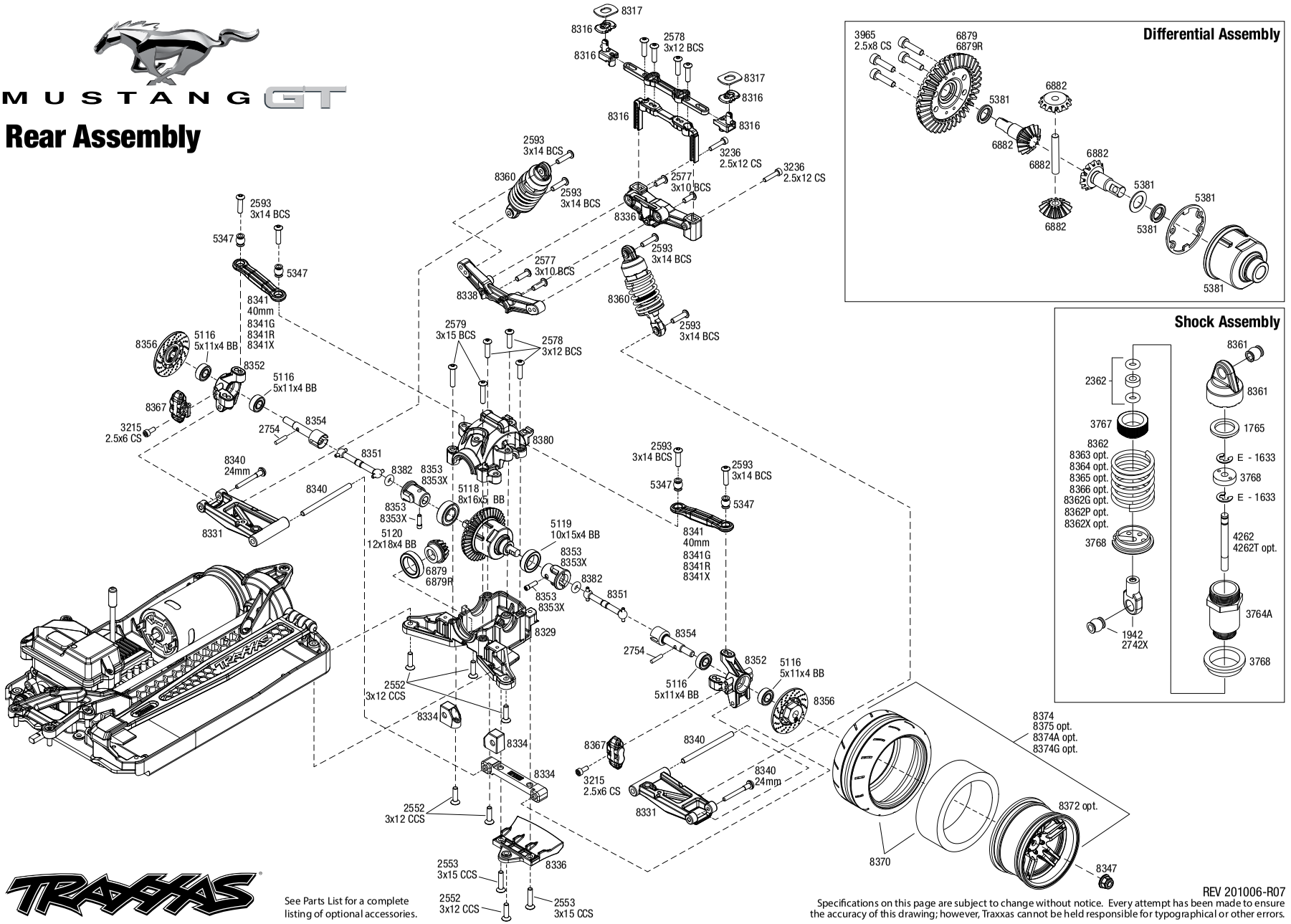

Differential Assembly

Shock Assembly

TRAXXAS

See Parts List for a complete listing of optional accessories.

REV 201006-R07

Specifications on this page are subject to change without notice. Every attempt has been made to ensure the accuracy of this drawing; however, Traxxas cannot be held responsible for typographical or other errors.

MUSTANG GT (83044-4)

MUSTANG GT

Modular Assembly

Questions? **Call toll-free, 1-888-TRAXXAS**

REV 201006-R07

Specifications on this page are subject to change without notice. Every attempt has been made to ensure the accuracy of this drawing; however, Traxxas cannot be held responsible for typographical or other errors.

See Parts List for a complete listing of optional accessories.

PARTS SHOWN IN BOLD ARE OPTIONAL ACCESSORIES.

Part categories and individual part listings are arranged alphabetically.

Bearings & Bushings

5119	Ball bearings, blue rubber sealed (10x15x4mm) (2)
5120	Ball bearings, blue rubber sealed (12x18x4mm) (2)
5116	Ball bearings, blue rubber sealed (5x11x4mm) (2)
5114	Ball bearings, blue rubber sealed (5x8x2.5mm) (2)
5105	Ball bearings, blue rubber sealed (6x10x3mm) (2)
5118	Ball bearings, blue rubber sealed (8x16x5mm) (2)

Body & Accessories

8319	Body bumper, foam
1834A	Body clips, black (12) (standard size)
8315	**Body mounts, front & rear (fits #8311 body) (2)**
8316	Body mounts, front & rear/ body mount posts/ body mount sliders
8317	Body washers, foam
8391	**Body, Cadillac CTS-V (clear, requires painting)/ decal sheet (includes side mirrors, spoiler, & mounting hardware)**
8391A	**Body, Cadillac CTS-V, blue (painted, decals applied)**
8391X	**Body, Cadillac CTS-V, silver (painted, decals applied)**
8386	**Body, Chevrolet Corvette Z06 (clear, requires painting)/ decal sheet (includes side mirrors, spoiler, & mounting hardware)**
8386X	**Body, Chevrolet Corvette Z06, blue (painted, decals applied)**
8386A	**Body, Chevrolet Corvette Z06, graphite (painted, decals applied)**
8386R	**Body, Chevrolet Corvette Z06, red (painted, decals applied)**
8311	**Body, Ford GT® (clear, requires painting)/ decal sheet (includes tail lights, exhaust tips, & mounting hardware)**
8311X	**Body, Ford GT®, black (painted, decals applied) (tail lights, exhaust tips, & mounting hardware (part #8314) sold separately)**
8311A	**Body, Ford GT®, blue (painted, decals applied) (tail lights, exhaust tips, & mounting hardware (part #8314) sold separately)**
8311R	**Body, Ford GT®, red (painted, decals applied) (tail lights, exhaust tips, & mounting hardware (part #8314) sold separately)**
8312	**Body, Ford Mustang (clear, requires painting)/ window masks/ decal sheet**
8312X	Body, Ford Mustang, black (painted, decals applied)
8336	Bumper, rear (1)/ rear body mount (1)
8393	**Decal sheet, Cadillac CTS-V**
8387	**Decal sheets, Chevrolet Corvette Z06**
8392	**Mirrors, side, black (left & right)/ mirror retainers (2)/ body clips (4)/ o-rings (4)/ spoiler, black/ spoiler retainer (1)/ 1.6x5 BCS (self-tapping) (3) (fits #8391 body)**
8388	**Mirrors, side, black (left & right)/ mirror retainers (2)/ spoiler, black/ spoiler retainer (1)/ 1.6x5 BCS (self-tapping) (3)/ 2.6x8 BCS (self-tapping) (2) (fits #8386 body)**
8314	**Tail lights (2)/ tail light mounts (4) / exhaust tips (2)/ exhaust tip mount (1)/ 3x10 flat-head screws (2)/ 3x8 BCS (2)**

Brake Components

8367	Brake calipers (red), front (2)/ rear (2)
8356	Wheel hubs, hex (disc brake rotors) (4)

Center Driveline

8381	Housing, differential (front)
8380	Housing, differential (rear)

Chassis & Attachments

8327	Battery hold-down/ battery clip/ hold-down post/ screw pin/ pivot post screw
8319	Body bumper, foam
8324	Box, receiver (sealed) (steering servo mount)/ receiver cover/ access plug/ foam pads/ silicone grease/ 2.5x10 CS (3)
8335	Bumper, front (1 each, upper & lower)
8336	Bumper, rear (1)/ rear body mount (1)
8322	Chassis
8321	Chassis brace (front)
8323	Gear cover (rear chassis brace)/ wire retainer

Differential Components

5381	Carrier, differential/ x-ring gaskets (2)/ ring gear gasket/ 6x10x0.5 TW
5136X	**Differential oil kit (1 each: 10K, 30K, 50K weights)**
8381	Housing, differential (front)
8380	Housing, differential (rear)
8379	Housing, spool / spool shaft/ bushing
6879R	**Ring gear, differential/ pinion gear, differential (machined, spiral cut) (rear)**
6879	Ring gear, differential/ pinion gear, differential (rear)

Driveline Components

8353X	**Drive cups, inner (2) (steel constant-velocity driveshafts)/ screw pins (2)**
8353	Drive cups, inner (2)/ screw pins (2)
8355X	**Driveshaft, center, aluminum (blue-anodized)**
8355G	**Driveshaft, center, aluminum (green-anodized)**
8355R	**Driveshaft, center, aluminum (red-anodized)**
8355	Driveshaft, center, aluminum / pin
8350	Driveshaft, front (2)
8351	Driveshaft, rear (2)
8350X	**Driveshafts, steel constant-velocity (assembled), front (2)**
8351X	**Driveshafts, steel constant-velocity (assembled), rear (2)**
8382	O-rings (12)
2754	Stub axle pins (4)
8354	Stub axles (front or rear) (2)
8356	Wheel hubs, hex (disc brake rotors) (4)

Front Suspension & Steering

8330	Bulkhead, front
8341	Camber link/toe link set (plastic/ non-adjustable) (front & rear)
8332	Caster blocks (c-hubs) (2)/ kingpin bushings (4)
8334	Mounts, suspension arms (front & rear)/ hinge pin retainers (4)
8334X	**Mounts, suspension arms, aluminum (blue-anodized) (front & rear)/ hinge pin retainers (12)/ inserts (6)**
8334G	**Mounts, suspension arms, aluminum (green-anodized) (front & rear)/ hinge pin retainers (12)/ inserts (6)**
8334R	**Mounts, suspension arms, aluminum (red-anodized) (front & rear)/ hinge pin retainers (12)/ inserts (6)**
5347	Rod ends, Revo® (large) with hollow balls (12)
8345	**Servo saver nuts, aluminum, blue-anodized (hex (1), serrated (1))**
8345G	**Servo saver nuts, aluminum, green-anodized (hex (1), serrated (1))**
8345R	**Servo saver nuts, aluminum, red-anodized (hex (1), serrated (1))**
8344	Servo saver/ servo saver spring/ servo horn, steering
8338	Shock towers, front & rear
8343	Steering bellcranks/ hardware
8337	Steering block (2)
2754	Stub axle pins (4)
8354	Stub axles (front or rear) (2)
8333	Suspension arms, front (left & right)
8340	Suspension pin set, complete (front & rear)
8398	**Sway bar kit, 4-Tec® 2.0 (front and rear) (includes front and rear sway bars and adjustable linkage)**
8342	**Toe links, steel (34mm) (2)**
8341X	**Turnbuckles, aluminum (blue-anodized), camber links, 32mm (front) (2)/ camber links, 28mm (rear) (2)/ toe links, 34mm (2)/ aluminum wrench**
8341G	**Turnbuckles, aluminum (green-anodized), camber links, 32mm (front) (2)/ camber links, 28mm (rear) (2)/ toe links, 34mm (2)/ aluminum wrench**
8341R	**Turnbuckles, aluminum (red-anodized), camber links, 32mm (front) (2)/ camber links, 28mm (rear) (2)/ toe links, 34mm (2)/ aluminum wrench**

Hardware

1834A	Body clips, black (12) (standard size)
8347	Nuts, 4mm flanged nylon locking, serrated (black) (10)
5347	Rod ends, Revo® (large) with hollow balls (12)
3229	Screws, 2.5x10mm cap-head machine (hex drive) (6)
3236	Screws, 2.5x12mm cap-head machine (6)
3215	Screws, 2.5x6mm cap-head machine (hex drive) (6)
2577	Screws, 3x10mm button-head machine (hex drive) (6)
2587	Screws, 3x10mm cap-head machine (6) (no washer)
2551	Screws, 3x10mm countersunk machine (6) (hex drive)
4859	Screws, 3x10mm flat-head machine (hex drive) (4)
2578	Screws, 3x12mm button-head machine (hex drive) (6)
2552	Screws, 3x12mm countersunk machine (6) (hex drive)
2593	Screws, 3x14mm button-head machine (hex drive) (6)
2579	Screws, 3x15mm button-head machine (hex drive) (6)
2553	Screws, 3x15mm countersunk machine (6) (hex drive)
8356	Wheel hubs, hex (disc brake rotors) (4)

Motors & Electronics

2260	**BEC assembly (complete)**
2072A	Gear set (for 2070, 2075 servos)
3354R	Motor cover, endbell (Velineon® 3500)

MUSTANG GT (83044-4)

3785	Motor, Titan® 12T (12-Turn, 550 size)
8390	Plate, motor
2074	Servo case/gaskets (for 2056 and 2075 waterproof servos)
8345	**Servo saver nuts, aluminum, blue-anodized (hex (1), serrated (1))**
8345G	**Servo saver nuts, aluminum, green-anodized (hex (1), serrated (1))**
8345R	**Servo saver nuts, aluminum, red-anodized (hex (1), serrated (1))**
8344	Servo saver/ servo saver spring/ servo horn, steering
2075R	**Servo, digital high-speed, metal gear (ball bearing), waterproof**
2075	Servo, digital high-torque (ball bearing), waterproof
2075X	**Servo, digital high-torque, metal gear (ball bearing), waterproof**
3350R	**Velineon® VXL-3s Brushless Power System, waterproof (includes VXL-3s waterproof ESC, Velineon 3500 motor, and speed control mounting plate (part #3725R))**
3355R	**Velineon® VXL-3s Electronic Speed Control, waterproof (brushless) (fwd/rev/brake)**
3018R	XL-5 Electronic Speed Control, waterproof (land version, low-voltage detection, fwd/rev/brake)

Radio System, Batteries & Chargers

2842X	**5000mAh 7.4v 2-Cell 25C LiPo Battery**
2843X	**5800mAh 7.4v 2-Cell 25C LiPo Battery**
2869X	**7600mAh 7.4v 2-Cell 25C LiPo Battery**
2976	**AC to DC converter, 40W**
2938X	**Adapter, Traxxas® iD® LiPo battery (adapts Traxxas iD batteries to separate balance ports)**
2943	**Battery charge indicators (green (4), blue (4), grey (4))**
6548	Battery door, transmitter (replacement for #6516, 6517, 6528, 6529, 6530 transmitters)
2914	**Battery, Power Cell AA Alkaline (4)**
2923X	**Battery, Power Cell, 3000mAh (NiMH, 7-C flat, 8.4V)**
2940X	**Battery, Series 3 Power Cell, 3300mAh (NiMH, 7-C flat, 8.4V)**
2950X	**Battery, Series 4 Power Cell, 4200mAh (NiMH, 7-C flat, 8.4V)**
2960X	**Battery, Series 5 Power Cell, 5000mAh (NiMH, 7-C flat, 8.4V)**
2983	**Battery/charger completer pack (includes #2969 2-amp NiMH peak detecting AC charger (1), #2923X 3000mAh 8.4V 7-cell NiMH battery (1))**
2992	**Battery/charger completer pack (includes #2970 iD® charger (1), #2843X 5800mAh 7.4V 2-cell 25C LiPo battery (1))**
2260	**BEC assembly (complete)**
2975	**Charger, DC, 4 amp (6 - 7 cell, 7.2 - 8.4 volt, NiMH)**
2972	**Charger, EZ-Peak® Dual, 100W, NiMH/LiPo with iD® Auto Battery Identification**
2973	**Charger, EZ-Peak® Live Dual, 200W, NiMH/LiPo with iD® Auto Battery Identification**
2971	**Charger, EZ-Peak® Live, 100W, NiMH/LiPo with iD® Auto Battery Identification**
2970	**Charger, EZ-Peak® Plus, 4 amp, NiMH/LiPo with iD® Auto Battery Identification**
6525	**Communication link, telemetry expander**
6541	**Connector, power tap (with cable) (long)/ wire tie**
6512	**Cover plate, Traxxas Link™ Wireless Module**
2978	**Fuse, charger, 5A (2) (for #2974, 2975, 2977)**
2072A	Gear set (for 2070, 2075 servos)
2968X	**LiPo cell voltage checker/balancer (includes #2938X adapter for Traxxas® iD® batteries)**
2968	**LiPo cell voltage checker/balancer (requires #2938X adapter for Traxxas® iD® batteries)**
6560	**Mount, telemetry expander (fits 4-Tec® 2.0)**
6535	**Mount, temperature sensor (electric motors)/ wire tie/ thermal pad**
6519	Receiver, micro, TQ 2.4GHz (3-channel)
6533	**Receiver, micro, TQi 2.4GHz with telemetry & TSM (5-channel)**
6552	**Seal kit, expander box (includes o-ring, seals, and silicone grease)**
6526	**Sensor, auto-detectable, temperature**
6527	**Sensor, auto-detectable, voltage**
6521	**Sensor, temperature and voltage (long)**
2074	Servo case/gaskets (for 2056 and 2075 waterproof servos)
8345	**Servo saver nuts, aluminum, blue-anodized (hex (1), serrated (1))**
8345G	**Servo saver nuts, aluminum, green-anodized (hex (1), serrated (1))**
8345R	**Servo saver nuts, aluminum, red-anodized (hex (1), serrated (1))**
8344	Servo saver/ servo saver spring/ servo horn, steering
2075R	**Servo, digital high-speed, metal gear (ball bearing), waterproof**
2075	Servo, digital high-torque (ball bearing), waterproof
2075X	**Servo, digital high-torque, metal gear (ball bearing), waterproof**
6553X	**Telemetry expander 2.0 and GPS module 2.0, TQi radio system**
6550X	**Telemetry expander 2.0, TQi radio system (for use only with #6551X GPS module)**
6551X	**Telemetry GPS module 2.0, TQi radio system (for use only with #6550X telemetry expander)**
6509R	**TQi 2.4 GHz High Output radio system, 2-channel, Traxxas Link™ enabled, TSM (2-ch transmitter, 5-ch micro receiver)**
6507R	**TQi 2.4 GHz High Output radio system, 4-channel with Traxxas Link™ Wireless Module, TSM (4-ch transmitter, 5-ch micro receiver)**
6516	Transmitter, TQ 2.4GHz, 2-channel (transmitter only)
6528	**Transmitter, TQi Traxxas Link™ enabled, 2.4GHz high output, 2-channel (transmitter only)**
6529	**Transmitter, TQi Traxxas Link™ enabled, 2.4GHz high output, 3-channel (transmitter only)**
6530	**Transmitter, TQi Traxxas Link™ enabled, 2.4GHz high output, 4-channel (transmitter only)**
6511	**Traxxas Link™ Wireless Module**
3018R	XL-5 Electronic Speed Control, waterproof (land version, low-voltage detection, fwd/rev/brake)

Ready-To-Race Model

83044-4	Ford Mustang GT®: 1/10 Scale AWD Supercar with TQ 2.4GHz radio system

Rear Suspension

8329	Bulkhead, rear
8352	Carriers, stub axle (left & right)
8334	Mounts, suspension arms (front & rear)/ hinge pin retainers (4)
8334X	**Mounts, suspension arms, aluminum (blue-anodized) (front & rear)/ hinge pin retainers (12)/ inserts (6)**
8334G	**Mounts, suspension arms, aluminum (green-anodized) (front & rear)/ hinge pin retainers (12)/ inserts (6)**
8334R	**Mounts, suspension arms, aluminum (red-anodized) (front & rear)/ hinge pin retainers (12)/ inserts (6)**
5347	Rod ends, Revo® (large) with hollow balls (12)
8338	Shock towers, front & rear
2754	Stub axle pins (4)
8354	Stub axles (front or rear) (2)
8331	Suspension arms, rear (left & right)
8340	Suspension pin set, complete (front & rear)
8398	**Sway bar kit, 4-Tec® 2.0 (front and rear) (includes front and rear sway bars and adjustable linkage)**
8341X	**Turnbuckles, aluminum (blue-anodized), camber links, 32mm (front) (2)/ camber links, 28mm (rear) (2)/ toe links, 34mm (2)/ aluminum wrench**
8341G	**Turnbuckles, aluminum (green-anodized), camber links, 32mm (front) (2)/ camber links, 28mm (rear) (2)/ toe links, 34mm (2)/ aluminum wrench**
8341R	**Turnbuckles, aluminum (red-anodized), camber links, 32mm (front) (2)/ camber links, 28mm (rear) (2)/ toe links, 34mm (2)/ aluminum wrench**

Shocks (Pro-level Aluminum)

2658	**Big Bore shocks (short) (hard-anodized & PTFE-coated T6 aluminum) (assembled with TiN shafts w/ springs)(f/r)(2) (Note: Assembled with 32mm shafts, 29mm shafts included)**
2669	**Piston head set (2-hole (2)/ 3-hole (2))/ shock mounting bushings & washers (2) (Big Bore Shocks)**
1942	Rod ends (16 long & 4 short)/ hollow ball connectors (18)/ ball screws (2)
2742X	Rod ends, short (6)/ hollow balls (6)
8361	Shock caps (black) (4) (assembled with hollow balls)
2667	**Shock caps, aluminum (Big Bore Shocks) (2)**
4261T	**Shock shafts, hardened steel, titanium nitride coated (29mm) (front) (2)**
4262T	**Shock shafts, hardened steel, titanium nitride coated (32mm) (2)**
4261	**Shock shafts, steel, chrome finish (29mm) (front) (2)**
4262	**Shock shafts, steel, chrome finish (32mm) (2)**
1765	Silicone diaphragms (4)
1666	**Silicone shock oil (30 wt)**
2668	**Spring retainers, upper & lower (2)/ spring pre-load spacers: 1mm (4)/ 1.5mm (2)/ 2mm (2)/ 4mm (2)/ 8mm (2) (Big Bore Shocks)**

Shocks (Ultra Shocks)

1942	Rod ends (16 long & 4 short)/ hollow ball connectors (18)/ ball screws (2)
2742X	Rod ends, short (6)/ hollow balls (6)
8361	Shock caps (black) (4) (assembled with hollow balls)
8362X	**Spring, shock (blue) (3.7 rate) (2)**
8362G	**Spring, shock (green) (3.7 rate) (2)**
8362P	**Spring, shock (pink) (3.7 rate) (2)**
8366	**Spring, shock (red) (2.8 rate, white stripe) (2)**
8365	**Spring, shock (red) (3.325 rate, orange stripe) (2)**
8362	Spring, shock (red) (3.7 rate) (2)
8363	**Spring, shock (red) (4.075 rate, green stripe) (2)**
8364	**Spring, shock (red) (4.4 rate, black stripe) (2)**
8360	Ultra Shocks (grey) (short) (includes spring pre-load spacers) (2)

Spur Gears & Pinion Gears

2728 Ball bearings (5x8x2.5mm) (2)
8323 Gear cover (rear chassis brace)/ wire retainer
2419 Gear, 19-T pinion (48-pitch) / set screw
2421 Gear, 21-T pinion (48-pitch) / set screw
2422 Gear, 22-T pinion (48-pitch) / set screw
2423 Gear, 23-T pinion (48-pitch) / set screw
2424 Gear, 24-T pinion (48-pitch) / set screw
2426 Gear, 26-T pinion (48-pitch)/set screw
4725 Gear, pinion (25-tooth) (48-pitch) / set screw
4728 Gear, pinion (28-tooth) (48-pitch)/ set screw
8359 Spur gear, 62-tooth
8357 Spur gear, 70-tooth

Steering Components

5347 Rod ends, Revo® (large) with hollow balls (12)
8345 Servo saver nuts, aluminum, blue-anodized (hex (1), serrated (1))
8345G Servo saver nuts, aluminum, green-anodized (hex (1), serrated (1))
8345R Servo saver nuts, aluminum, red-anodized (hex (1), serrated (1))
8344 Servo saver/ servo saver spring/ servo horn, steering
8343 Steering bellcranks/ hardware
8342 Toe links, steel (34mm) (2)

Suspension Linkage

8341 Camber link/toe link set (plastic/ non-adjustable) (front & rear)
5347 Rod ends, Revo® (large) with hollow balls (12)
8341X Turnbuckles, aluminum (blue-anodized), camber links, 32mm (front) (2)/ camber links, 28mm (rear) (2)/ toe links, 34mm (2)/ aluminum wrench
8341G Turnbuckles, aluminum (green-anodized), camber links, 32mm (front) (2)/ camber links, 28mm (rear) (2)/ toe links, 34mm (2)/ aluminum wrench
8341R Turnbuckles, aluminum (red-anodized), camber links, 32mm (front) (2)/ camber links, 28mm (rear) (2)/ toe links, 34mm (2)/ aluminum wrench

Team Traxxas Items

2514 Decal sheet, racing sponsors
9950 Official Team Traxxas® racing decal set (flag logo/ 6-color)
9909 Traxxas® racing banner, red & black (3x7 feet)

Tires & Wheels

8375 Tires & wheels, assembled, glued (split-spoke black chrome wheels, 1.9" Response tires, foam inserts) (front (2), rear (extra wide) (2)) (VXL rated)
8378 Tires and wheels, assembled, glued (split-spoke black chrome wheels, 1.9" Drift tires) (front and rear)
8373 Tires and wheels, assembled, glued (split-spoke black chrome wheels, 1.9" Response tires) (front) (2)
8374 Tires and wheels, assembled, glued (split-spoke black chrome wheels, 1.9" Response tires) (extra wide, rear) (2)
8376G Tires and wheels, assembled, glued (split-spoke green wheels, 1.9" Drift tires) (front)
8377G Tires and wheels, assembled, glued (split-spoke green wheels, 1.9" Drift tires) (rear)
8374G Tires and wheels, assembled, glued (split-spoke green wheels, 1.9" Response tires) (extra wide, rear) (2) (VXL rated)
8373G Tires and wheels, assembled, glued (split-spoke green wheels, 1.9" Response tires) (front) (2) (VXL rated)
8376A Tires and wheels, assembled, glued (split-spoke orange wheels, 1.9" Drift tires) (front)
8377A Tires and wheels, assembled, glued (split-spoke orange wheels, 1.9" Drift tires) (rear)
8374A Tires and wheels, assembled, glued (split-spoke orange wheels, 1.9" Response tires) (extra wide, rear) (2) (VXL rated)
8373A Tires and wheels, assembled, glued (split-spoke orange wheels, 1.9" Response tires) (front) (2) (VXL rated)
8370 Tires, Response 1.9" Touring (extra wide, rear)/ foam inserts (2) (fits #8372 wide wheel)
8369 Tires, Response 1.9" Touring (front) (2)/ foam inserts (2)
8371 Wheels, 1.9" split-spoke (black chrome) (front) (2)
8372 Wheels, 1.9" split-spoke (black chrome) (wide, rear) (2)

Traxxas Tools

3433X Body reamer (aluminum handle)
3433 Body reamer (plastic handle)
3436 Cap, body reamer
3432 Scissors, curved tip
3431 Scissors, straight tip
8712 Speed Bit Essentials Set, hex and nut driver, 7-piece, includes premium handle (medium), travel pouch, hex drivers (straight: 1.5mm, 2.0mm, 2.5mm) and nut drivers (5.0mm, 5.5mm, 7.0mm, and 8.0mm), 1/4" drive
8721 Speed bit handle, medium (one piece)
8720 Speed bit handle, premium, large (rubber overmold)
8722 Speed bit handle, premium, medium (rubber overmold)
8710 Speed Bit Master Set, hex and nut driver, 13-piece, includes premium handle (medium), travel pouch, hex drivers (straight: 1.5mm, 2.0mm, 2.5mm, 3.0mm), (ball-end: 2.0mm, 2.5mm, 3.0mm), and nut drivers (4.00mm, 4.50mm, 5.00mm, 5.50mm, 7.00mm, 8.00mm),
8711 Speed Bit Master Set, hex driver, 7-piece straight and ball end, includes premium handle (medium), travel pouch, hex drivers (straight: 1.5mm, 2.0mm, 2.5mm, 3.0mm) (ball end: 2.0mm, 2.5mm, 3.0mm), 1/4" drive
8719 Speed Bit Master Set, nut driver, 6-piece, includes premium handle (medium), travel pouch, and nut drivers (4.0mm, 4.5mm, 5.0mm, 5.5mm, 7.0mm, 8.0mm), 1/4" drive
8716 Speed Bit Set, hex driver, 2-piece ball-end (2.0mm, 2.5mm), 1/4" drive
8716X Speed Bit Set, hex driver, 3-piece ball-end (2.0mm, 2.5mm, 3.0mm), 1/4" drive
8715 Speed Bit Set, hex driver, 3-piece straight (1.5mm, 2.0mm, 2.5mm), 1/4" drive
8715X Speed Bit Set, hex driver, 4-piece straight (1.5mm, 2.0mm, 2.5mm, 3.0mm), 1/4" drive
3415 Tool set with pouch (includes 1.5mm, 2.0mm, 2.5mm, 3.0mm, 3.5mm, 4mm drivers/ 4mm, 5mm, 5.5mm, 7mm and 8mm nut drivers/ 2mm, 4mm, and 5mm slotted screwdrivers/ #00 Phillips, #0 Phillips, and #1 Phillips screwdrivers/ 4mm and 8mm wrench/ driver handle

Turnbuckles & Threaded Rods

8341 Camber link/toe link set (plastic/ non-adjustable) (front & rear)
8342 Toe links, steel (34mm) (2)
8341X Turnbuckles, aluminum (blue-anodized), camber links, 32mm (front) (2)/ camber links, 28mm (rear) (2)/ toe links, 34mm (2)/ aluminum wrench
8341G Turnbuckles, aluminum (green-anodized), camber links, 32mm (front) (2)/ camber links, 28mm (rear) (2)/ toe links, 34mm (2)/ aluminum wrench
8341R Turnbuckles, aluminum (red-anodized), camber links, 32mm (front) (2)/ camber links, 28mm (rear) (2)/ toe links, 34mm (2)/ aluminum wrench

If you have questions or need technical assistance, call Traxxas at:

1-888-TRAXXAS

(1-888-872-9927) (U.S. residents only)

For orders, calls outside the U.S., and other information, call 972-549-3000, or fax to 972-549-3011 e-mail Traxxas at support@Traxxas.com

TRAXXAS.COM

FORD PERFORMANCE

GT

MODEL 83056-4

1/10-SCALE AWD SUPERCAR



30+ mph*

ALL-WHEEL DRIVE SYSTEM

TITAN 12T 550 MOTOR AND XL-5 ELECTRONIC SPEED CONTROL

TQi 2.4GHz 2-CHANNEL TRANSMITTER

Official Licensed Product

All other copyrights or trademarks are the property of their respective owners and are being used under license.

Ford Motor Company Trademarks and Trade Dress used under license to Traxxas.

MADE TO BE DRIVEN

The new Ford GT captured the world's attention with its unique, aerodynamically optimized shape, its extraordinarily powerful 3.5L EcoBoost® V6 engine, and a historic return after 50 years to win the legendary 24 Hours of Le Mans. Innovation abounds and everything about the Ford GT is designed to deliver pure performance.

Traxxas has captured the Ford GT in a stunning 1/10 scale replica that is faithful to the beautiful and functional styling of the incredible flying buttress design. Every detail is there including the taillights and exhaust tips. Built to be driven, this Ford GT replica rests on the Traxxas 4-Tec™ 2.0 chassis that's all-new from the ground up.

*With included optional pinion gear

GT Front Assembly

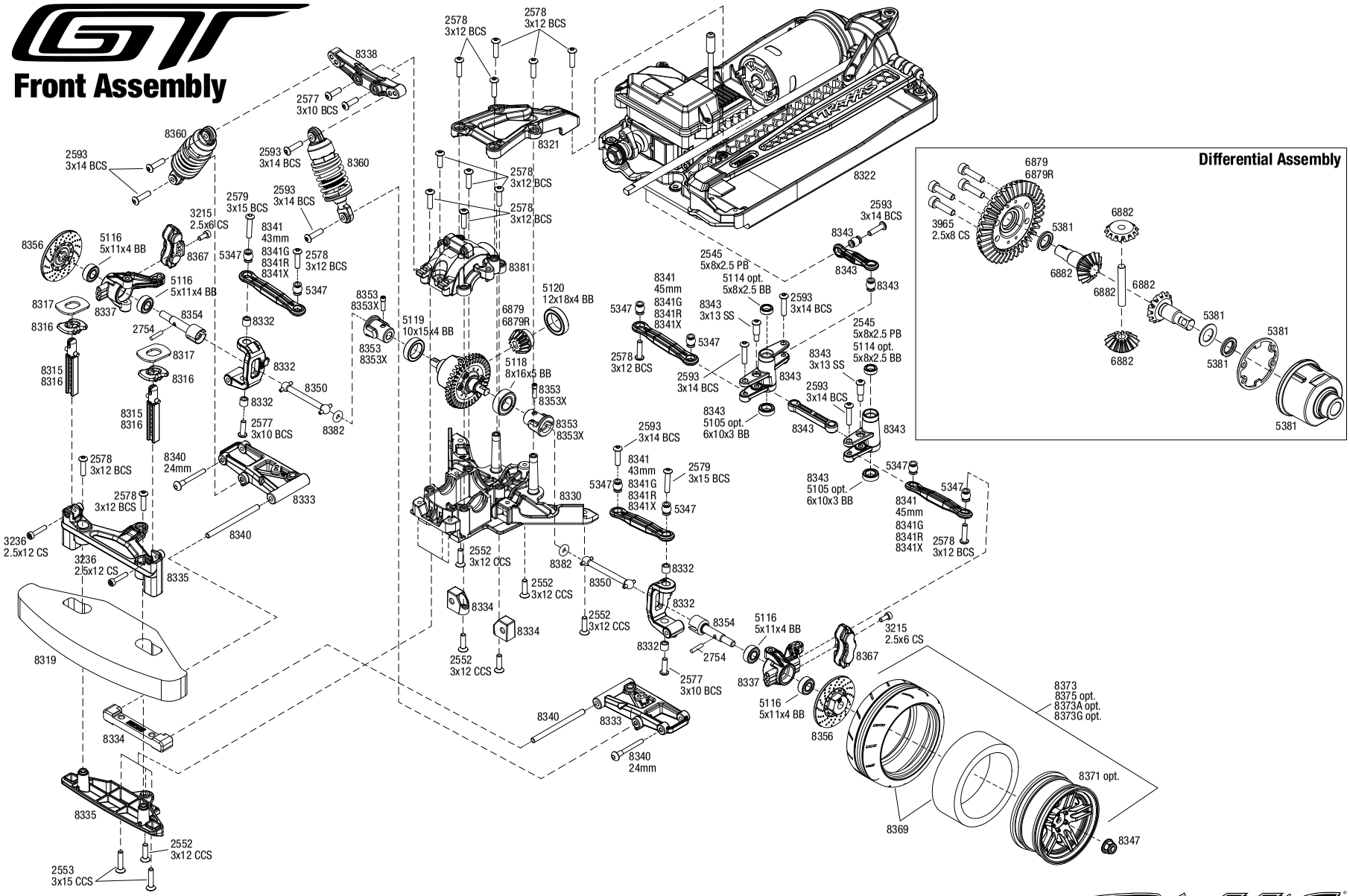

Differential Assembly

REV 180906-R06

Specifications on this page are subject to change without notice. Every attempt has been made to ensure the accuracy of this drawing; however, Traxxas cannot be held responsible for typographical or other errors.

See Parts List for a complete listing of optional accessories.

Questions? **Call toll-free, 1-888-TRAXXAS**

GT Chassis Assembly

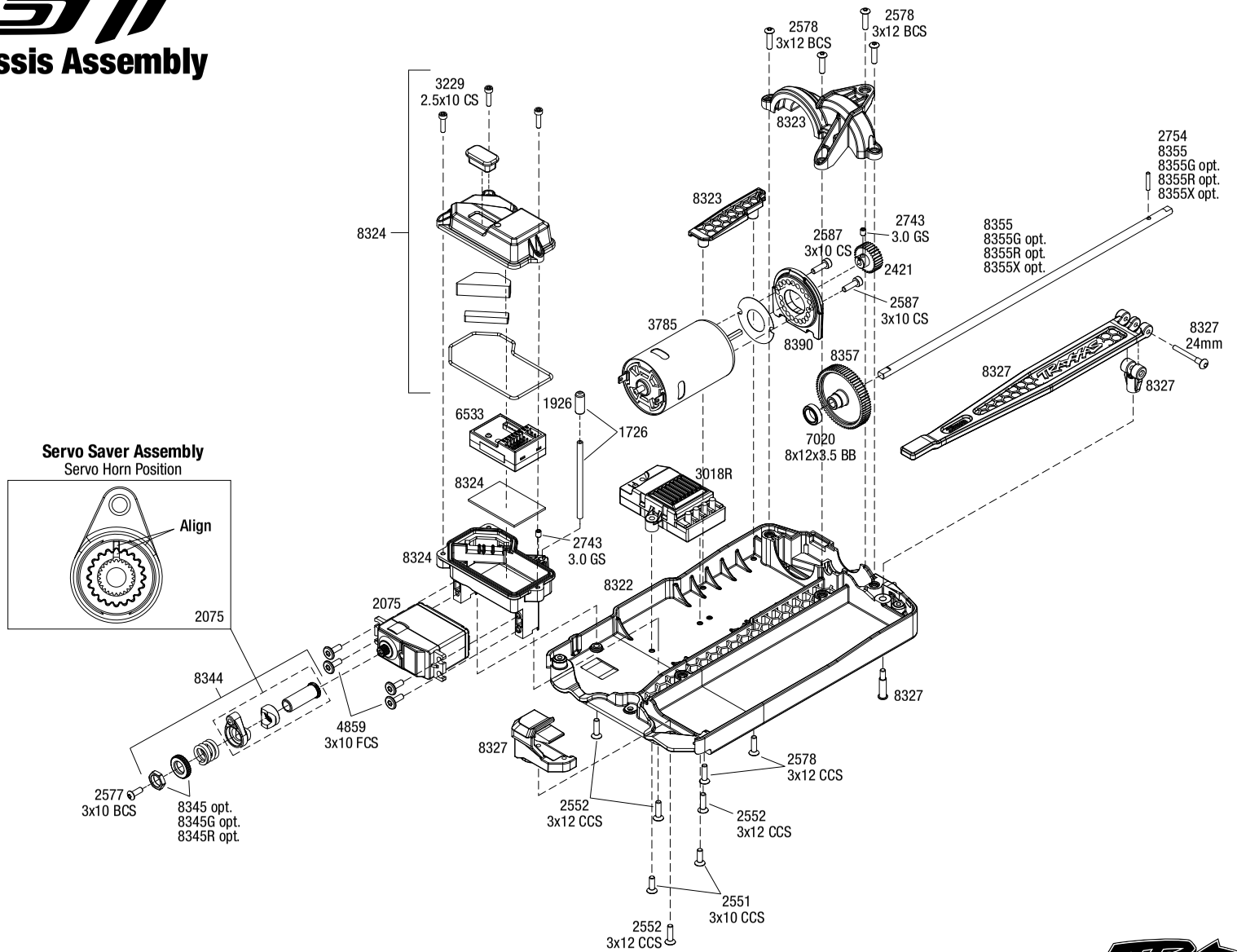

Servo Saver Assembly
Servo Horn Position

See Parts List for a complete listing of optional accessories.

Specifications on this page are subject to change without notice. Every attempt has been made to ensure the accuracy of this drawing; however, Traxxas cannot be held responsible for typographical or other errors.

REV 180906-R06

GT Rear Assembly

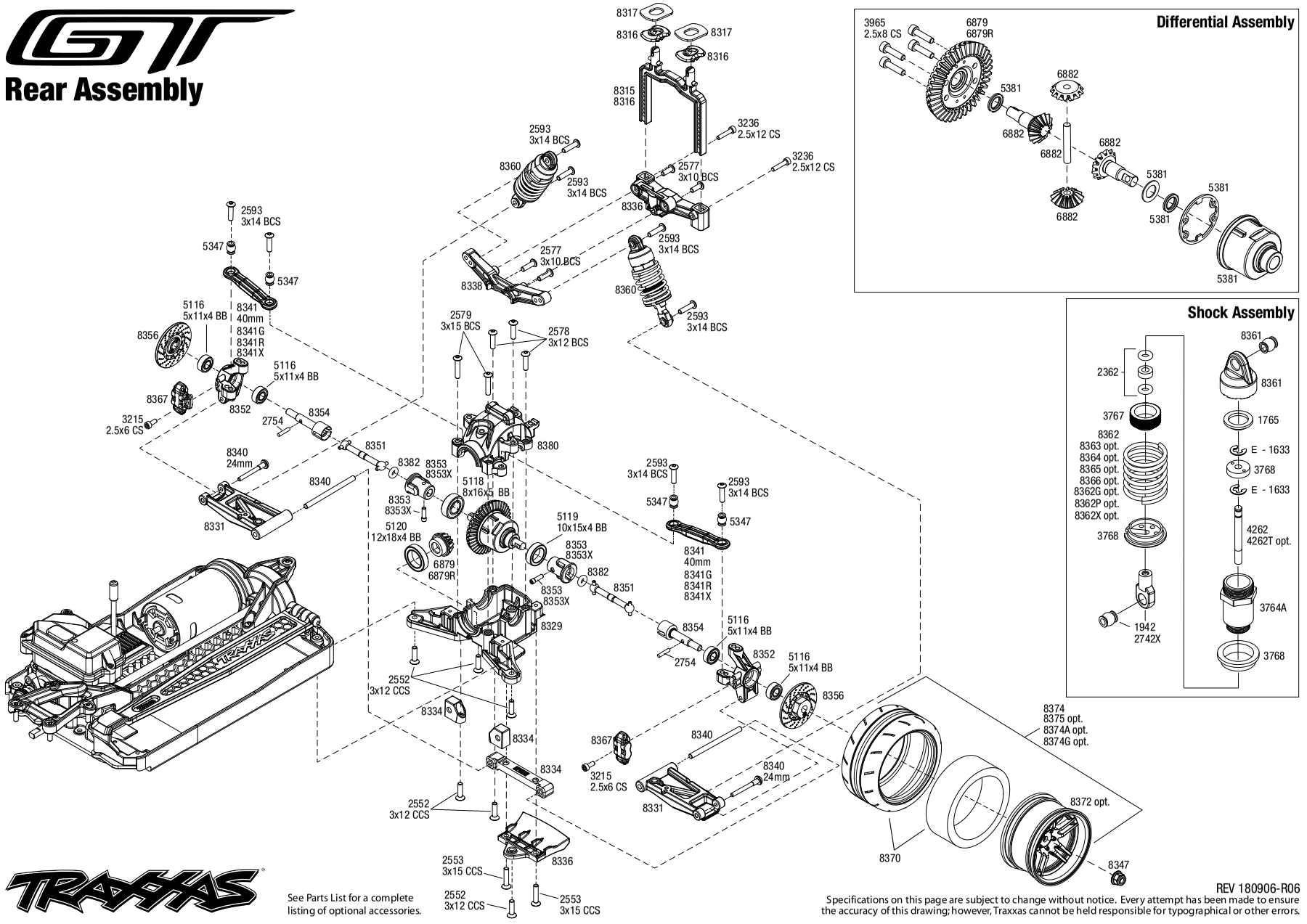

Differential Assembly

Shock Assembly

TRAXXAS

See Parts List for a complete listing of optional accessories.

REV 180906-R06

Specifications on this page are subject to change without notice. Every attempt has been made to ensure the accuracy of this drawing; however, Traxxas cannot be held responsible for typographical or other errors.

FORD GT (83056-4)

Modular Assembly

Questions? **Call toll-free, 1-888-TRAXXAS**

REV 180906-R06

Specifications on this page are subject to change without notice. Every attempt has been made to ensure the accuracy of this drawing; however, Traxxas cannot be held responsible for typographical or other errors.

See Parts List for a complete listing of optional accessories.

PARTS SHOWN IN BOLD ARE OPTIONAL ACCESSORIES.

Part categories and individual part listings are arranged alphabetically.

Bearings & Bushings

5119 Ball bearings, blue rubber sealed (10x15x4mm) (2)
5120 Ball bearings, blue rubber sealed (12x18x4mm) (2)
5116 Ball bearings, blue rubber sealed (5x11x4mm) (2)
5114 Ball bearings, blue rubber sealed (5x8x2.5mm) (2)
5105 Ball bearings, blue rubber sealed (6x10x3mm) (2)
5118 Ball bearings, blue rubber sealed (8x16x5mm) (2)

Body & Accessories

8319 Body bumper, foam
1834A Body clips, black (12) (standard size)
8315 Body mounts, front & rear (fits #8311 body) (2)
8316 Body mounts, front & rear/ body mount posts/ body mount sliders
8317 Body washers, foam
8391 Body, Cadillac CTS-V (clear, requires painting)/ decal sheet (includes side mirrors, spoiler, & mounting hardware)
8391A Body, Cadillac CTS-V, blue (painted, decals applied)
8391X Body, Cadillac CTS-V, silver (painted, decals applied)
8386 Body, Chevrolet Corvette Z06 (clear, requires painting)/ decal sheet (includes side mirrors, spoiler, & mounting hardware)
8386X Body, Chevrolet Corvette Z06, blue (painted, decals applied)
8386A Body, Chevrolet Corvette Z06, graphite (painted, decals applied)
8386R Body, Chevrolet Corvette Z06, red (painted, decals applied)
8311 Body, Ford GT® (clear, requires painting)/ decal sheet (includes tail lights, exhaust tips, & mounting hardware)
8311X Body, Ford GT®, black (painted, decals applied) (tail lights, exhaust tips, & mounting hardware (part #8314) sold separately)
8311A Body, Ford GT®, blue (painted, decals applied) (tail lights, exhaust tips, & mounting hardware (part #8314) sold separately)
8311R Body, Ford GT®, red (painted, decals applied) (tail lights, exhaust tips, & mounting hardware (part #8314) sold separately)
8312 Body, Ford Mustang (clear, requires painting)/ window masks/ decal sheet
8312X Body, Ford Mustang, black (painted, decals applied)
8336 Bumper, rear (1)/ rear body mount (1)
8393 Decal sheet, Cadillac CTS-V
8387 Decal sheets, Chevrolet Corvette Z06
8385 LED tail light kit (fits #8311 body)
8392 Mirrors, side, black (left & right)/ mirror retainers (2)/ body clips (4)/ o-rings (4)/ spoiler, black/ spoiler retainer (1)/ 1.6x5 BCS (self-tapping) (3) (fits #8391 body)
8388 Mirrors, side, black (left & right)/ mirror retainers (2)/ spoiler, black/ spoiler retainer (1)/ 1.6x5 BCS (self-tapping) (3)/ 2.6x8 BCS (self-tapping) (2) (fits #8386 body)
8314 Tail lights (2)/ tail light mounts (4) / exhaust tips (2)/ exhaust tip mount (1)/ 3x10 flat-head screws (2)/ 3x8 BCS (2)

Brake Components

8367 Brake calipers (red), front (2)/ rear (2)
8356 Wheel hubs, hex (disc brake rotors) (4)

Center Driveline

8381 Housing, differential (front)
8380 Housing, differential (rear)

Chassis & Attachments

8327 Battery hold-down/ battery clip/ hold-down post/ screw pin/ pivot post screw
8319 Body bumper, foam
8324 Box, receiver (sealed) (steering servo mount)/ receiver cover/ access plug/ foam pads/ silicone grease/ 2.5x10 CS (3)
8335 Bumper, front (1 each, upper & lower)
8336 Bumper, rear (1)/ rear body mount (1)
8322 Chassis
8321 Chassis brace (front)
8323 Gear cover (rear chassis brace)/ wire retainer

Differential Components

5381 Carrier, differential/ x-ring gaskets (2)/ ring gear gasket/ 6x10x0.5 TW
5136X Differential oil kit (1 each: 10K, 30K, 50K weights)
8381 Housing, differential (front)
8380 Housing, differential (rear)
8379 Housing, spool / spool shaft/ bushing
6879R Ring gear, differential/ pinion gear, differential (machined, spiral cut) (rear)
6879 Ring gear, differential/ pinion gear, differential (rear)

Driveline Components

8353X Drive cups, inner (2) (steel constant-velocity driveshafts)/ screw pins (2)
8353 Drive cups, inner (2)/ screw pins (2)
8355X Driveshaft, center, aluminum (blue-anodized)
8355G Driveshaft, center, aluminum (green-anodized)
8355R Driveshaft, center, aluminum (red-anodized)
8355 Driveshaft, center, aluminum / pin
8350 Driveshaft, front (2)
8351 Driveshaft, rear (2)
8350X Driveshafts, steel constant-velocity (assembled), front (2)
8351X Driveshafts, steel constant-velocity (assembled), rear (2)
8382 O-rings (12)
2754 Stub axle pins (4)
8354 Stub axles (front or rear) (2)
8356 Wheel hubs, hex (disc brake rotors) (4)

Front Suspension & Steering

8330 Bulkhead, front
8341 Camber link/toe link set (plastic/ non-adjustable) (front & rear)
8332 Caster blocks (c-hubs) (2)/ kingpin bushings (4)
8334 Mounts, suspension arms (front & rear)/ hinge pin retainers (4)
8334X Mounts, suspension arms, aluminum (blue-anodized) (front & rear)/ hinge pin retainers (12)/ inserts (6)
8334G Mounts, suspension arms, aluminum (green-anodized) (front & rear)/ hinge pin retainers (12)/ inserts (6)
8334R Mounts, suspension arms, aluminum (red-anodized) (front & rear)/ hinge pin retainers (12)/ inserts (6)
5347 Rod ends, Revo® (large) with hollow balls (12)
8345 Servo saver nuts, aluminum, blue-anodized (hex (1), serrated (1))
8345G Servo saver nuts, aluminum, green-anodized (hex (1), serrated (1))
8345R Servo saver nuts, aluminum, red-anodized (hex (1), serrated (1))
8344 Servo saver/ servo saver spring/ servo horn, steering
8338 Shock towers, front & rear
8343 Steering bellcranks/ hardware
8337 Steering block (2)
2754 Stub axle pins (4)
8354 Stub axles (front or rear) (2)
8333 Suspension arms, front (left & right)
8340 Suspension pin set, complete (front & rear)
8398 Sway bar kit, 4-Tec® 2.0 (front and rear) (includes front and rear sway bars and adjustable linkage)
8342 Toe links, steel (34mm) (2)
8341X Turnbuckles, aluminum (blue-anodized), camber links, 32mm (front) (2)/ camber links, 28mm (rear) (2)/ toe links, 34mm (2)/ aluminum wrench
8341G Turnbuckles, aluminum (green-anodized), camber links, 32mm (front) (2)/ camber links, 28mm (rear) (2)/ toe links, 34mm (2)/ aluminum wrench
8341R Turnbuckles, aluminum (red-anodized), camber links, 32mm (front) (2)/ camber links, 28mm (rear) (2)/ toe links, 34mm (2)/ aluminum wrench

Hardware

8347 Nuts, 4mm flanged nylon locking, serrated (black) (10)
5347 Rod ends, Revo® (large) with hollow balls (12)
3229 Screws, 2.5x10mm cap-head machine (hex drive) (6)
3236 Screws, 2.5x12mm cap-head machine (6)
3215 Screws, 2.5x6mm cap-head machine (hex drive) (6)
2577 Screws, 3x10mm button-head machine (hex drive) (6)
2587 Screws, 3x10mm cap-head machine (6) (no washer)
2551 Screws, 3x10mm countersunk machine (6) (hex drive)
4859 Screws, 3x10mm flat-head machine (hex drive) (4)
2578 Screws, 3x12mm button-head machine (hex drive) (6)
2552 Screws, 3x12mm countersunk machine (6) (hex drive)
2593 Screws, 3x14mm button-head machine (hex drive) (6)
2579 Screws, 3x15mm button-head machine (hex drive) (6)
2553 Screws, 3x15mm countersunk machine (6) (hex drive)
8356 Wheel hubs, hex (disc brake rotors) (4)

Motors & Electronics

2260 BEC assembly (complete)
2072A Gear set (for 2070, 2075 servos)
3354R Motor cover, endbell (Velineon® 3500)
3785 Motor, Titan® 12T (12-Turn, 550 size)

FORD GT (83056-4)

8390 Plate, motor
2074 Servo case/gaskets (for 2056 and 2075 waterproof servos)
8345 Servo saver nuts, aluminum, blue-anodized (hex (1), serrated (1))
8345G Servo saver nuts, aluminum, green-anodized (hex (1), serrated (1))
8345R Servo saver nuts, aluminum, red-anodized (hex (1), serrated (1))
8344 Servo saver/ servo saver spring/ servo horn, steering
2075R Servo, digital high-speed, metal gear (ball bearing), waterproof
2075 Servo, digital high-torque (ball bearing), waterproof
2075X Servo, digital high-torque, metal gear (ball bearing), waterproof
3350R Velineon® VXL-3s Brushless Power System, waterproof (includes VXL-3s waterproof ESC, Velineon 3500 motor, and speed control mounting plate (part #3725R))
3355R Velineon® VXL-3s Electronic Speed Control, waterproof (brushless) (fwd/rev/brake)
3018R XL-5 Electronic Speed Control, waterproof (land version, low-voltage detection, fwd/rev/brake)

Radio System, Batteries & Chargers

2842X 5000mAh 7.4v 2-Cell 25C LiPo Battery
2843X 5800mAh 7.4v 2-Cell 25C LiPo Battery
2869X 7600mAh 7.4v 2-Cell 25C LiPo Battery
2976 AC to DC converter, 40W
2938X Adapter, Traxxas® iD® LiPo battery (adapts Traxxas iD batteries to separate balance ports)
2943 Battery charge indicators (green (4), blue (4), grey (4))
6548 Battery door, transmitter (replacement for #6516, 6517, 6528, 6529, 6530 transmitters)
2914 Battery, Power Cell AA Alkaline (4)
2923X Battery, Power Cell, 3000mAh (NiMH, 7-C flat, 8.4V)
2940X Battery, Series 3 Power Cell, 3300mAh (NiMH, 7-C flat, 8.4V)
2950X Battery, Series 4 Power Cell, 4200mAh (NiMH, 7-C flat, 8.4V)
2960X Battery, Series 5 Power Cell, 5000mAh (NiMH, 7-C flat, 8.4V)
2983 Battery/charger completer pack (includes #2969 2-amp NiMH peak detecting AC charger (1), #2923X 3000mAh 8.4V 7-cell NiMH battery (1))
2992 Battery/charger completer pack (includes #2970 iD® charger (1), #2843X 5800mAh 7.4V 2-cell 25C LiPo battery (1))
2260 BEC assembly (complete)
2975 Charger, DC, 4 amp (6 - 7 cell, 7.2 - 8.4 volt, NiMH)
2972 Charger, EZ-Peak® Dual, 100W, NiMH/LiPo with iD® Auto Battery Identification
2973 Charger, EZ-Peak® Live Dual, 200W, NiMH/LiPo with iD® Auto Battery Identification
2971 Charger, EZ-Peak® Live, 100W, NiMH/LiPo with iD® Auto Battery Identification
2970 Charger, EZ-Peak® Plus, 4 amp, NiMH/LiPo with iD® Auto Battery Identification
6525 Communication link, telemetry expander
6541 Connector, power tap (with cable) (long)/ wire tie
6512 Cover plate, Traxxas Link™ Wireless Module
2978 Fuse, charger, 5A (2) (for #2974, 2975, 2977)
2072A Gear set (for 2070, 2075 servos)
2968X LiPo cell voltage checker/balancer (includes #2938X adapter for Traxxas® iD® batteries)
2968 LiPo cell voltage checker/balancer (requires #2938X adapter for Traxxas® iD® batteries)
6560 Mount, telemetry expander (fits 4-Tec® 2.0)
6535 Mount, temperature sensor (electric motors)/ wire tie/ thermal pad
6533 Receiver, micro, TQi 2.4GHz with telemetry & TSM (5-channel)
6552 Seal kit, expander box (includes o-ring, seals, and silicone grease)
6526 Sensor, auto-detectable, temperature
6527 Sensor, auto-detectable, voltage
6521 Sensor, temperature and voltage (long)
2074 Servo case/gaskets (for 2056 and 2075 waterproof servos)
8345 Servo saver nuts, aluminum, blue-anodized (hex (1), serrated (1))
8345G Servo saver nuts, aluminum, green-anodized (hex (1), serrated (1))
8345R Servo saver nuts, aluminum, red-anodized (hex (1), serrated (1))
8344 Servo saver/ servo saver spring/ servo horn, steering
2075R Servo, digital high-speed, metal gear (ball bearing), waterproof
2075 Servo, digital high-torque (ball bearing), waterproof
2075X Servo, digital high-torque, metal gear (ball bearing), waterproof
6553X Telemetry expander 2.0 and GPS module 2.0, TQi radio system
6550X Telemetry expander 2.0, TQi radio system (for use only with #6551X GPS module)
6551X Telemetry GPS module 2.0, TQi radio system (for use only with #6550X telemetry expander)
6509R TQi 2.4 GHz High Output radio system, 2-channel, Traxxas Link™ enabled, TSM (2-ch transmitter, 5-ch micro receiver)
6507R TQi 2.4 GHz High Output radio system, 4-channel with Traxxas Link™ Wireless Module, TSM (4-ch transmitter, 5-ch micro receiver)
6528 Transmitter, TQi Traxxas Link™ enabled, 2.4GHz high output, 2-channel (transmitter only)
6529 Transmitter, TQi Traxxas Link™ enabled, 2.4GHz high output, 3-channel (transmitter only)
6530 Transmitter, TQi Traxxas Link™ enabled, 2.4GHz high output, 4-channel (transmitter only)
6511 Traxxas Link™ Wireless Module
3018R XL-5 Electronic Speed Control, waterproof (land version, low-voltage detection, fwd/rev/brake)

Ready-To-Race Model

83056-4 Ford GT®: 1/10 Scale AWD Supercar with TQi Traxxas Link™ Enabled 2.4GHz Radio System & Traxxas Stability Management (TSM)®

Rear Suspension

8329 Bulkhead, rear
8352 Carriers, stub axle (left & right)
8334 Mounts, suspension arms (front & rear)/ hinge pin retainers (4)
8334X Mounts, suspension arms, aluminum (blue-anodized) (front & rear)/ hinge pin retainers (12)/ inserts (6)
8334G Mounts, suspension arms, aluminum (green-anodized) (front & rear)/ hinge pin retainers (12)/ inserts (6)
8334R Mounts, suspension arms, aluminum (red-anodized) (front & rear)/ hinge pin retainers (12)/ inserts (6)
5347 Rod ends, Revo® (large) with hollow balls (12)
8338 Shock towers, front & rear
2754 Stub axle pins (4)
8354 Stub axles (front or rear) (2)
8331 Suspension arms, rear (left & right)
8340 Suspension pin set, complete (front & rear)
8398 Sway bar kit, 4-Tec® 2.0 (front and rear) (includes front and rear sway bars and adjustable linkage)
8341X Turnbuckles, aluminum (blue-anodized), camber links, 32mm (front) (2)/ camber links, 28mm (rear) (2)/ toe links, 34mm (2)/ aluminum wrench
8341G Turnbuckles, aluminum (green-anodized), camber links, 32mm (front) (2)/ camber links, 28mm (rear) (2)/ toe links, 34mm (2)/ aluminum wrench
8341R Turnbuckles, aluminum (red-anodized), camber links, 32mm (front) (2)/ camber links, 28mm (rear) (2)/ toe links, 34mm (2)/ aluminum wrench

Shocks (Pro-level Aluminum)

2658 Big Bore shocks (short) (hard-anodized & PTFE-coated T6 aluminum) (assembled with TiN shafts w/ springs)(f/r)(2) (Note: Assembled with 32mm shafts, 29mm shafts included)
2669 Piston head set (2-hole (2)/ 3-hole (2))/ shock mounting bushings & washers (2) (Big Bore Shocks)
1942 Rod ends (16 long & 4 short)/ hollow ball connectors (18)/ ball screws (2)
2742X Rod ends, short (6)/ hollow balls (6)
8361 Shock caps (black) (4) (assembled with hollow balls)
2667 Shock caps, aluminum (Big Bore Shocks) (2)
4261T Shock shafts, hardened steel, titanium nitride coated (29mm) (front) (2)
4262T Shock shafts, hardened steel, titanium nitride coated (32mm) (2)
4261 Shock shafts, steel, chrome finish (29mm) (front) (2)
4262 Shock shafts, steel, chrome finish (32mm) (2)
1765 Silicone diaphragms (4)
1666 Silicone shock oil (30 wt)
2668 Spring retainers, upper & lower (2)/ spring pre-load spacers: 1mm (4)/ 1.5mm (2)/ 2mm (2)/ 4mm (2)/ 8mm (2) (Big Bore Shocks)

Shocks (Ultra Shocks)

1942 Rod ends (16 long & 4 short)/ hollow ball connectors (18)/ ball screws (2)
2742X Rod ends, short (6)/ hollow balls (6)
8361 Shock caps (black) (4) (assembled with hollow balls)
8362X Spring, shock (blue) (3.7 rate) (2)
8362G Spring, shock (green) (3.7 rate) (2)
8362P Spring, shock (pink) (3.7 rate) (2)
8366 Spring, shock (red) (2.8 rate, white stripe) (2)
8365 Spring, shock (red) (3.325 rate, orange stripe) (2)
8362 Spring, shock (red) (3.7 rate) (2)
8363 Spring, shock (red) (4.075 rate, green stripe) (2)

8364	**Spring, shock (red) (4.4 rate, black stripe) (2)**
8360	Ultra Shocks (grey) (short) (includes spring pre-load spacers) (2)

Spur Gears & Pinion Gears

2728	Ball bearings (5x8x2.5mm) (2)
8323	Gear cover (rear chassis brace)/ wire retainer
2419	**Gear, 19-T pinion (48-pitch) / set screw**
2421	Gear, 21-T pinion (48-pitch) / set screw
2422	**Gear, 22-T pinion (48-pitch) / set screw**
2423	**Gear, 23-T pinion (48-pitch) / set screw**
2424	**Gear, 24-T pinion (48-pitch) / set screw**
2426	**Gear, 26-T pinion (48-pitch)/set screw**
4725	Gear, pinion (25-tooth) (48-pitch) / set screw
4728	**Gear, pinion (28-tooth) (48-pitch)/ set screw**
8359	**Spur gear, 62-tooth**
8357	Spur gear, 70-tooth

Steering Components

5347	Rod ends, Revo® (large) with hollow balls (12)
8345	**Servo saver nuts, aluminum, blue-anodized (hex (1), serrated (1))**
8345G	**Servo saver nuts, aluminum, green-anodized (hex (1), serrated (1))**
8345R	**Servo saver nuts, aluminum, red-anodized (hex (1), serrated (1))**
8344	Servo saver/ servo saver spring/ servo horn, steering
8343	Steering bellcranks/ hardware
8342	**Toe links, steel (34mm) (2)**

Suspension Linkage

8341	Camber link/toe link set (plastic/ non-adjustable) (front & rear)
5347	Rod ends, Revo® (large) with hollow balls (12)
8341X	**Turnbuckles, aluminum (blue-anodized), camber links, 32mm (front) (2)/ camber links, 28mm (rear) (2)/ toe links, 34mm (2)/ aluminum wrench**
8341G	**Turnbuckles, aluminum (green-anodized), camber links, 32mm (front) (2)/ camber links, 28mm (rear) (2)/ toe links, 34mm (2)/ aluminum wrench**
8341R	**Turnbuckles, aluminum (red-anodized), camber links, 32mm (front) (2)/ camber links, 28mm (rear) (2)/ toe links, 34mm (2)/ aluminum wrench**

Team Traxxas Items

2514	**Decal sheet, racing sponsors**
9950	**Official Team Traxxas® racing decal set (flag logo/ 6-color)**
9909	**Traxxas® racing banner, red & black (3x7 feet)**

Tires & Wheels

8375	**Tires & wheels, assembled, glued (split-spoke black chrome wheels, 1.9" Response tires, foam inserts) (front (2), rear (extra wide) (2)) (VXL rated)**
8378	**Tires and wheels, assembled, glued (split-spoke black chrome wheels, 1.9" Drift tires) (front and rear)**
8373	Tires and wheels, assembled, glued (split-spoke black chrome wheels, 1.9" Response tires) (front) (2)
8374	Tires and wheels, assembled, glued (split-spoke black chrome wheels, 1.9" Response tires) (extra wide, rear) (2)
8376G	**Tires and wheels, assembled, glued (split-spoke green wheels, 1.9" Drift tires) (front)**
8377G	**Tires and wheels, assembled, glued (split-spoke green wheels, 1.9" Drift tires) (rear)**
8374G	**Tires and wheels, assembled, glued (split-spoke green wheels, 1.9" Response tires) (extra wide, rear) (2) (VXL rated)**
8373G	**Tires and wheels, assembled, glued (split-spoke green wheels, 1.9" Response tires) (front) (2) (VXL rated)**
8376A	**Tires and wheels, assembled, glued (split-spoke orange wheels, 1.9" Drift tires) (front)**
8377A	**Tires and wheels, assembled, glued (split-spoke orange wheels, 1.9" Drift tires) (rear)**
8374A	**Tires and wheels, assembled, glued (split-spoke orange wheels, 1.9" Response tires) (extra wide, rear) (2) (VXL rated)**
8373A	**Tires and wheels, assembled, glued (split-spoke orange wheels, 1.9" Response tires) (front) (2) (VXL rated)**
8370	Tires, Response 1.9" Touring (extra wide, rear)/ foam inserts (2) (fits #8372 wide wheel)
8369	Tires, Response 1.9" Touring (front) (2)/ foam inserts (2)
8371	**Wheels, 1.9" split-spoke (black chrome) (front) (2)**
8372	**Wheels, 1.9" split-spoke (black chrome) (wide, rear) (2)**

Traxxas Tools

3433X	**Body reamer (aluminum handle)**
3433	**Body reamer (plastic handle)**
3436	**Cap, body reamer**
3432	**Scissors, curved tip**
3431	**Scissors, straight tip**
8712	**Speed Bit Essentials Set, hex and nut driver, 7-piece, includes premium handle (medium), travel pouch, hex drivers (straight: 1.5mm, 2.0mm, 2.5mm) and nut drivers (5.0mm, 5.5mm, 7.0mm, and 8.0mm), 1/4" drive**
8721	**Speed bit handle, medium (one piece)**
8720	**Speed bit handle, premium, large (rubber overmold)**
8722	**Speed bit handle, premium, medium (rubber overmold)**
8710	**Speed Bit Master Set, hex and nut driver, 13-piece, includes premium handle (medium), travel pouch, hex drivers (straight: 1.5mm, 2.0mm, 2.5mm, 3.0mm), (ball-end: 2.0mm, 2.5mm, 3.0mm), and nut drivers (4.00mm, 4.50mm, 5.00mm, 5.50mm, 7.00mm, 8.00mm),**
8711	**Speed Bit Master Set, hex driver, 7-piece straight and ball end, includes premium handle (medium), travel pouch, hex drivers (straight: 1.5mm, 2.0mm, 2.5mm, 3.0mm) (ball end: 2.0mm, 2.5mm, 3.0mm), 1/4" drive**
8719	**Speed Bit Master Set, nut driver, 6-piece, includes premium handle (medium), travel pouch, and nut drivers (4.0mm, 4.5mm, 5.0mm, 5.5mm, 7.0mm, 8.0mm), 1/4" drive**
8716	**Speed Bit Set, hex driver, 2-piece ball-end (2.0mm, 2.5mm), 1/4" drive**
8716X	**Speed Bit Set, hex driver, 3-piece ball-end (2.0mm, 2.5mm, 3.0mm), 1/4" drive**
8715	**Speed Bit Set, hex driver, 3-piece straight (1.5mm, 2.0mm, 2.5mm), 1/4" drive**
8715X	**Speed Bit Set, hex driver, 4-piece straight (1.5mm, 2.0mm, 2.5mm, 3.0mm), 1/4" drive**
3415	**Tool set with pouch (includes 1.5mm, 2.0mm, 2.5mm, 3.0mm, 3.5mm, 4mm drivers/ 4mm, 5mm, 5.5mm, 7mm and 8mm nut drivers/ 2mm, 4mm, and 5mm slotted screwdrivers/ #00 Phillips, #0 Phillips, and #1 Phillips screwdrivers/ 4mm and 8mm wrench/ driver handle**

Turnbuckles & Threaded Rods

8341	Camber link/toe link set (plastic/ non-adjustable) (front & rear)
8342	**Toe links, steel (34mm) (2)**
8341X	**Turnbuckles, aluminum (blue-anodized), camber links, 32mm (front) (2)/ camber links, 28mm (rear) (2)/ toe links, 34mm (2)/ aluminum wrench**
8341G	**Turnbuckles, aluminum (green-anodized), camber links, 32mm (front) (2)/ camber links, 28mm (rear) (2)/ toe links, 34mm (2)/ aluminum wrench**
8341R	**Turnbuckles, aluminum (red-anodized), camber links, 32mm (front) (2)/ camber links, 28mm (rear) (2)/ toe links, 34mm (2)/ aluminum wrench**

If you have questions or need technical assistance, call Traxxas at:

1-888-TRAXXAS

(1-888-872-9927) (U.S. residents only)

For orders, calls outside the U.S., and other information, call 972-549-3000, or fax to 972-549-3011 e-mail Traxxas at support@Traxxas.com

TRAXXAS.COM

REV. 201002 1239

TRX-4 Sport · TRX-4 Sport with Traxx · Bronco Land Rover Defender · Blazer · G 500 · TRX-6 G 63



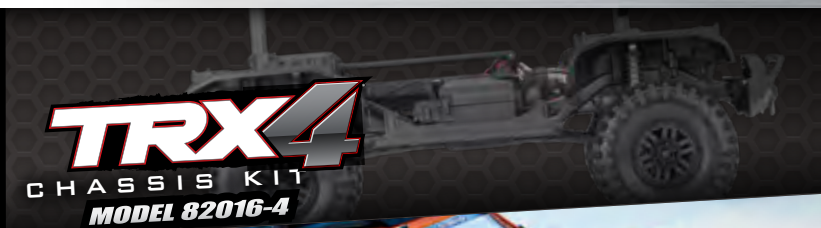







LAND ROVER
ABOVE & BEYOND









SCALE AND TRAIL

The Traxxas TRX-4® Scale and Trail™ Crawler is an all-new Traxxas design that is loaded with innovation that instantly obsoletes the status quo with exciting new features, versatility, and capability. In other words, we built it the Traxxas way, rugged, powerful, and ready for fun!

Underneath the authentic scale look is a machine built for extreme off-road capability that takes you to new places and new adventures. Exclusive portal axles deliver maximum ground clearance that dramatically turns "no way" into "no problem." Whether you are enjoying outdoor trails or getting technical on the rocks, TRX-4 provides unmatched driving versatility.

TRAXXAS
The Fastest Name In Radio Control®

TRX-4 SPORT

UNASSEMBLED KIT

MODEL 82010-4

4WD ELECTRIC
SCALE & TRAIL™ KIT



TRX-4 TECHNOLOGY AND CAPABILITY-AVAILABLE AS A KIT!

The Traxxas TRX-4 Sport is purpose built for trail-conquering RC fun with innovative technical features and rugged durability. The new TRX-4 Sport Unassembled Kit combines all the technical capability of the RTR truck, with the excitement of building your own kit. The TRX-4 Sport Kit assembles to form a roller chassis without electronics, battery, or charger. From mild to wild, enjoy ultimate build-it-yourself freedom to add your own motor, electronic speed control (ESC), servo, and radio system to the highly competent chassis. All the parts are organized neatly in labeled bags with pre-assembled shocks and suspension links. A fully illustrated color manual makes the kit as much fun to construct as it is to take off-road.

TRX-4 Front Assembly

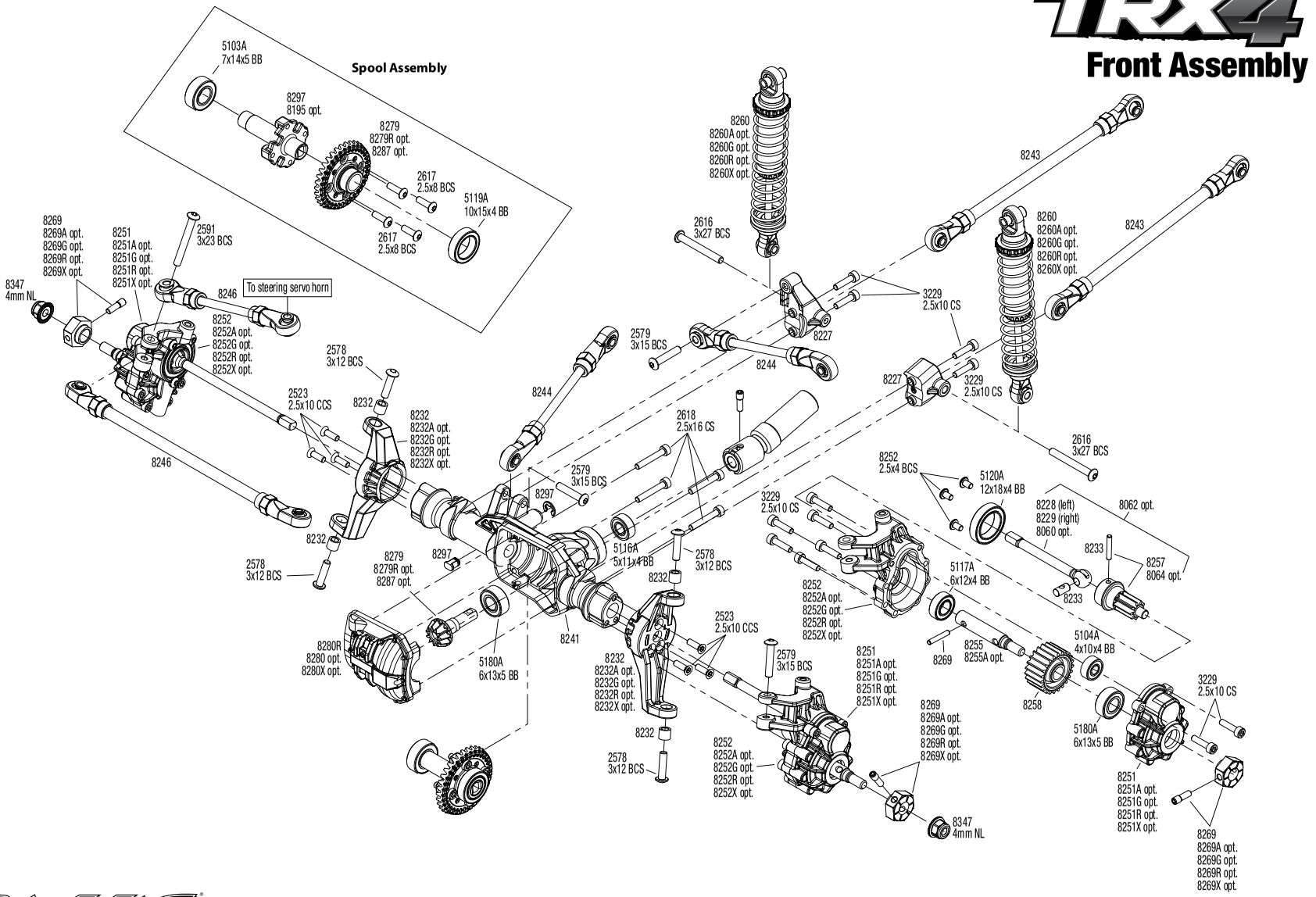

See Parts List for a complete listing of optional accessories.

REV 201020-R07

Specifications on this page are subject to change without notice. Every attempt has been made to ensure the accuracy of this drawing; however, Traxxas cannot be held responsible for typographical or other errors.

TRX-4 SPORT UNASSEMBLED KIT (82010-4)

EXPLODED VIEWS

Questions? **Call toll-free, 1-888-TRAXXAS**

TRAXXAS

TRX4®

Rear Assembly

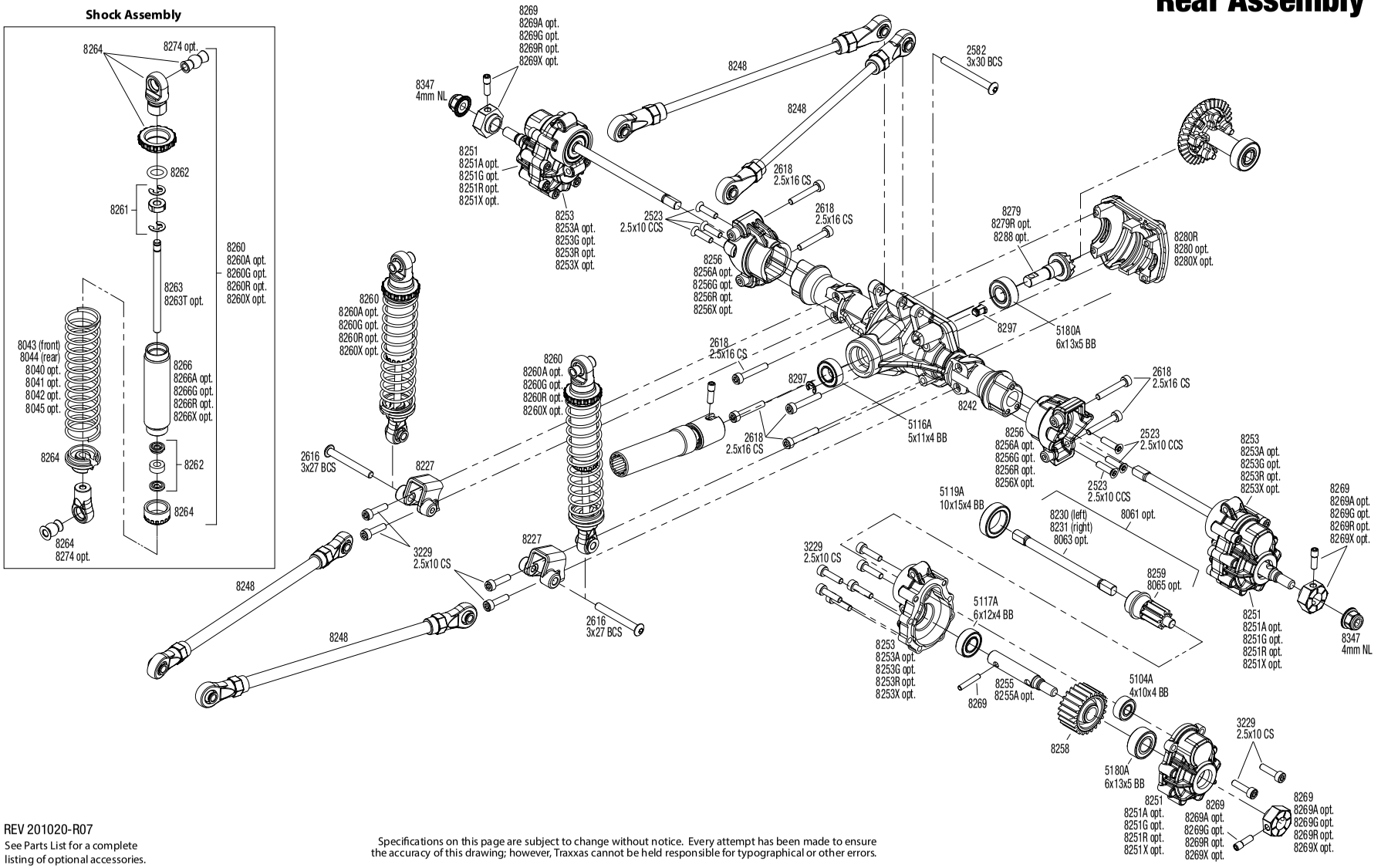

REV 201020-R07

See Parts List for a complete listing of optional accessories.

Specifications on this page are subject to change without notice. Every attempt has been made to ensure the accuracy of this drawing; however, Traxxas cannot be held responsible for typographical or other errors.

TRX-4 SPORT UNASSEMBLED KIT (82010-4)

Transmission Assembly

See Parts List for a complete listing of optional accessories.

Specifications on this page are subject to change without notice. Every attempt has been made to ensure the accuracy of this drawing; however, Traxxas cannot be held responsible for typographical or other errors.

REV 201020-R07

Optional Two-Speed Transmission Conversion Kit available as part #8196

Questions? **Call toll-free, 1-888-TRAXXAS**

Link Dimensions

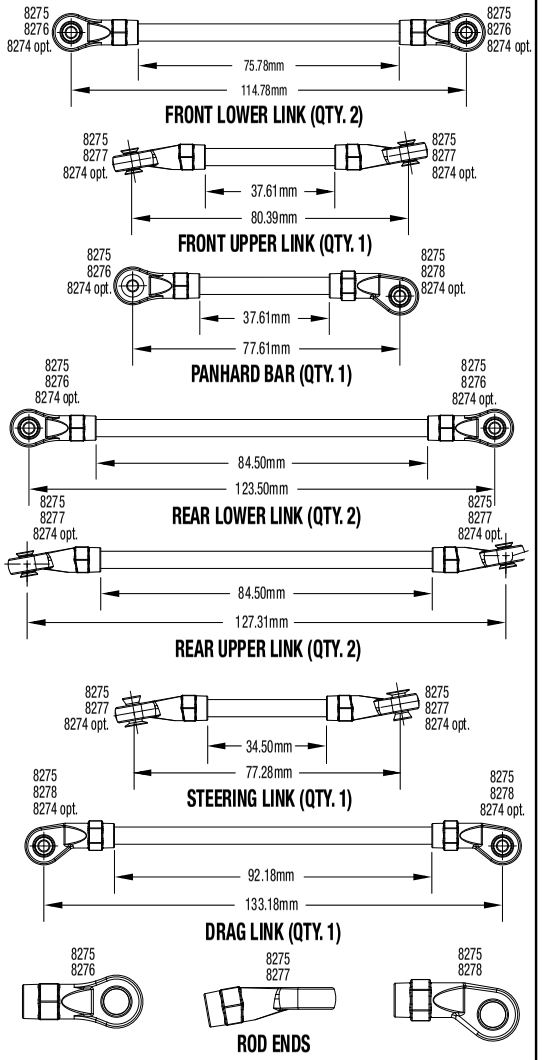

For standard hollow ball replacement, use part #5349.

Modular Assembly

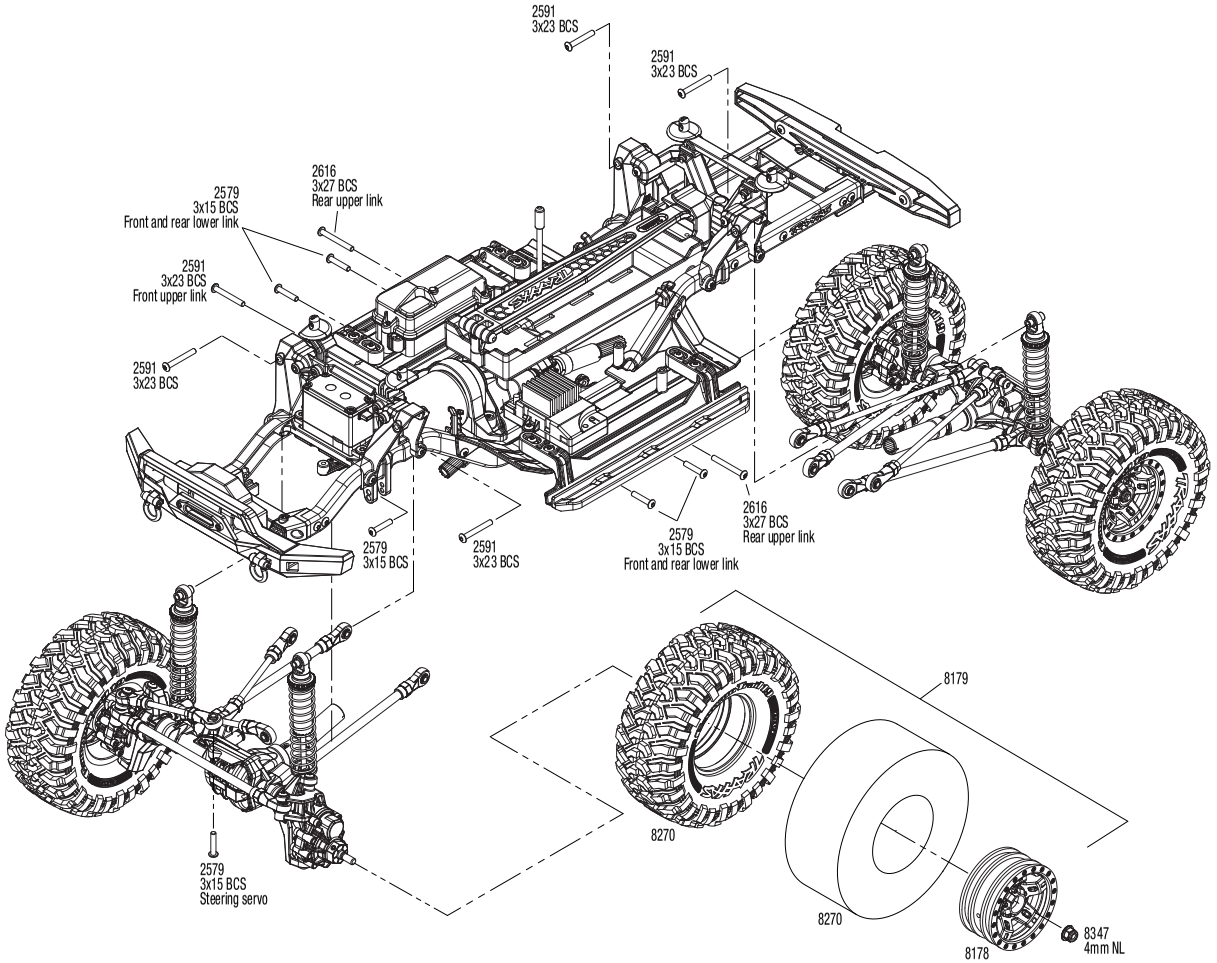

See Parts List for a complete listing of optional accessories.

REV 201020-R07

Specifications on this page are subject to change without notice. Every attempt has been made to ensure the accuracy of this drawing; however, Traxxas cannot be held responsible for typographical or other errors.

Questions? Call toll-free, 1-888-TRAXXAS

TRAXXAS

TRX4

Expedition Rack Assembly

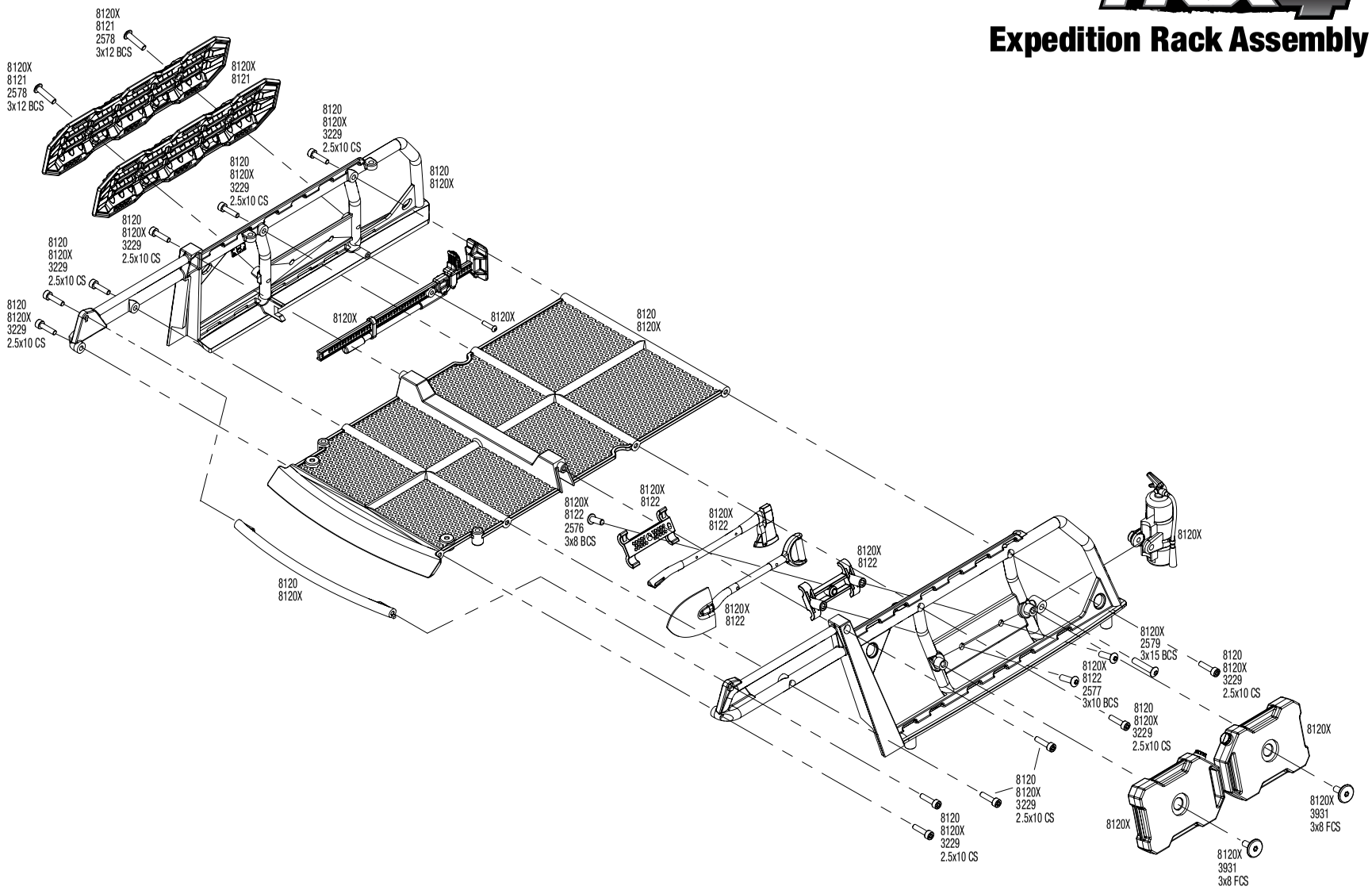

See Parts List for a complete listing of optional accessories.

Specifications on this page are subject to change without notice. Every attempt has been made to ensure the accuracy of this drawing; however, Traxxas cannot be held responsible for typographical or other errors.

REV 201020-R07

TRX4®

Body Assembly

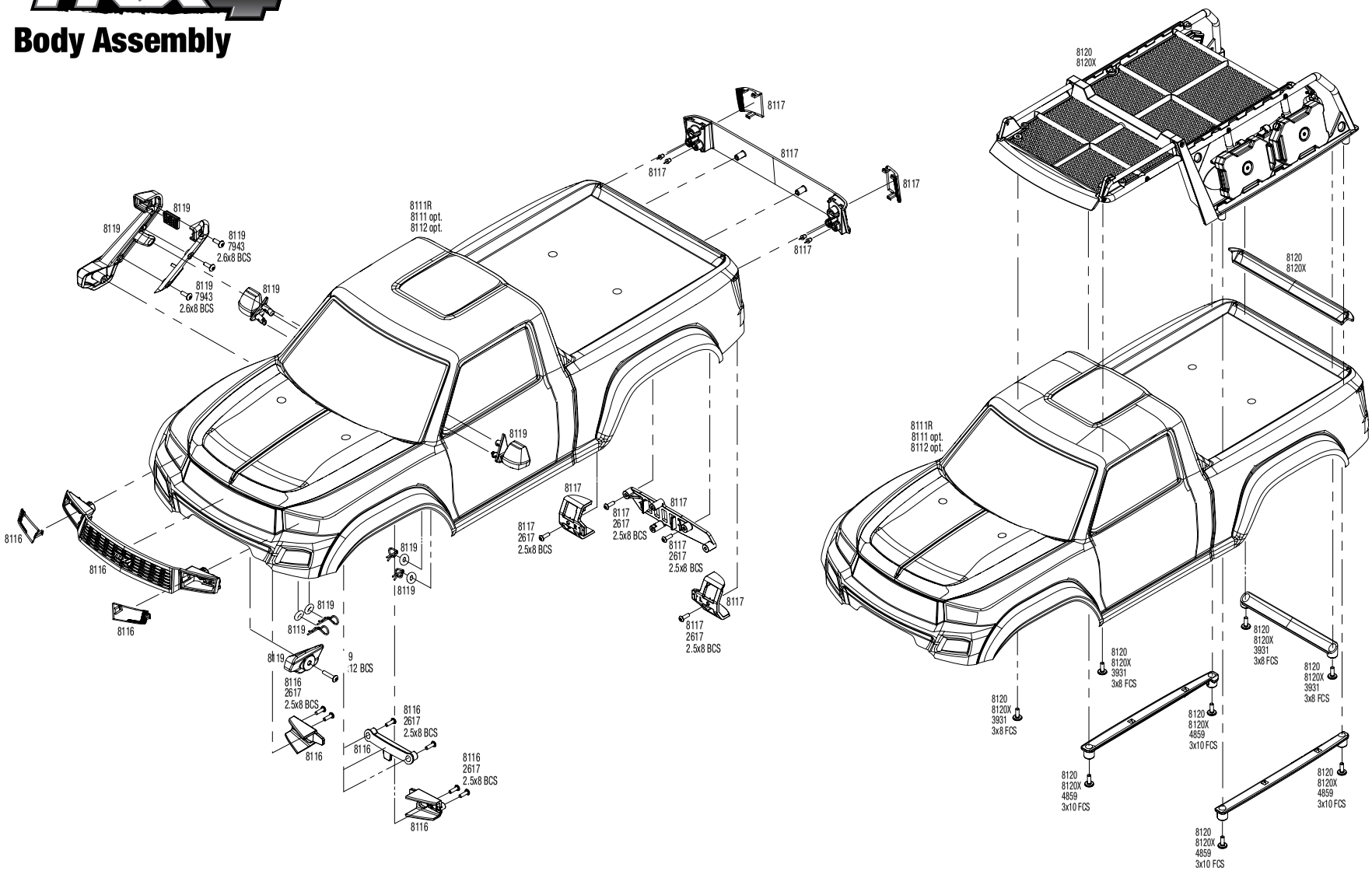

See Parts List for a complete listing of optional accessories.

Specifications on this page are subject to change without notice. Every attempt has been made to ensure the accuracy of this drawing; however, Traxxas cannot be held responsible for typographical or other errors.

REV 201020-R07

Questions? **Call toll-free, 1-888-TRAXXAS**

TRX-4 SPORT UNASSEMBLED KIT (82010-4)

PARTS SHOWN IN BOLD ARE OPTIONAL ACCESSORIES.

Part categories and individual part listings are arranged alphabetically.

Axle Components

8241	Axle housing, front
8242	Axle housing, intermediate (TRX-6™) or rear (TRX-4®)
8227	Axle mount set (complete) (front & rear) (for suspension links)
8228	Axle shaft, front (left)/ drive pin/ cross pin
8229	Axle shaft, front (right)/ drive pin/ cross pin
8060	**Axle shaft, front, heavy duty (left & right) (requires #8064 front portal drive input gear)**
8062	**Axle shaft, front, heavy duty (left & right)/ portal drive input gear (machined) (2) (assembled)**
8230	Axle shaft, rear (left)
8231	Axle shaft, rear (right)
8061	**Axle shaft, rear, heavy duty (left & right)/ portal drive input gear, rear (machined)**
8063	**Axle, rear, heavy duty (left & right) (requires #8065 rear portal drive input gear)**
8233	Cross pin (2)/ drive pin (2) (to rebuild front axle shafts)
8256	Portal drive axle mount, rear (left & right)
8256X	**Portal drive axle mount, rear, 6061-T6 aluminum (blue-anodized) (left and right)/ 2.5x16 CS (4)**
8256A	**Portal drive axle mount, rear, 6061-T6 aluminum (charcoal gray-anodized) (left and right)/ 2.5x16 CS (4)**
8256G	**Portal drive axle mount, rear, 6061-T6 aluminum (green-anodized) (left and right)/ 2.5x16 CS (4)**
8256R	**Portal drive axle mount, rear, 6061-T6 aluminum (red-anodized) (left and right)/ 2.5x16 CS (4)**
8252	Portal drive housing, inner, front (left & right)/ 2.5x4 BCS (6)
8253	Portal drive housing, inner, rear (left or right) (2)
8251	Portal drive housing, outer (front or rear) (2)
8064	**Portal drive input gear, front (machined) (left or right) (requires #8060 front axle shaft)**
8257	Portal drive input gear, front/ drive pin/ cross pin
8259	Portal drive input gear, rear
8065	**Portal drive input gear, rear (machined) (left or right) (requires #8063 rear axle)**
8258	Portal drive output gear, front or rear
8252X	**Portal housings, inner (front), 6061-T6 aluminum (blue-anodized) (2)/ 3x12 BCS (2)**
8252A	**Portal housings, inner (front), 6061-T6 aluminum (charcoal gray-anodized) (2)/ 3x12 BCS (2)**
8252G	**Portal housings, inner (front), 6061-T6 aluminum (green-anodized) (2)/ 3x12 BCS (2)**
8252R	**Portal housings, inner (front), 6061-T6 aluminum (red-anodized) (2)/ 3x12 BCS (2)**
8253X	**Portal housings, inner (rear), 6061-T6 aluminum (blue-anodized) (2)/ 2.5x10 CS (2)**
8253A	**Portal housings, inner (rear), 6061-T6 aluminum (charcoal gray-anodized) (2)/ 2.5x10 CS (2)**
8253G	**Portal housings, inner (rear), 6061-T6 aluminum (green-anodized) (2)/ 2.5x10 CS (2)**
8253R	**Portal housings, inner (rear), 6061-T6 aluminum (red-anodized) (2)/ 2.5x10 CS (2)**
8251X	**Portal housings, outer, 6061-T6 aluminum (blue-anodized) (2)/ 2.5x10 CS (12)**
8251A	**Portal housings, outer, 6061-T6 aluminum (charcoal gray-anodized) (2)/ 2.5x10 CS (12)**
8251G	**Portal housings, outer, 6061-T6 aluminum (green-anodized) (2)/ 2.5x10 CS (12)**
8251R	**Portal housings, outer, 6061-T6 aluminum (red-anodized) (2)/ 2.5x10 CS (12)**
8255	Stub axle (portal drive) (2)
8255A	**Stub axle, extended (portal drive) (2)**
8267	**Weight, portal housing, brass (34 grams) (2)/ 2.5x8 CS (6) (requires #8251X, 8251R, 8251A, or 8251G outer portal housing)**

Bearings & Bushings

5119A	Ball bearings, black rubber sealed (10x15x4mm) (2)
5120A	Ball bearings, black rubber sealed (12x18x4mm) (2)
5104A	Ball bearings, black rubber sealed (4x10x4mm) (2)
5115A	Ball bearings, black rubber sealed (5x10x4mm) (2)
5116A	Ball bearings, black rubber sealed (5x11x4mm) (2)
5114A	Ball bearings, black rubber sealed (5x8x2.5mm) (2)
5117A	Ball bearings, black rubber sealed (6x12x4mm) (2)
5180A	Ball bearings, black rubber sealed (6x13x5mm) (2)
5103A	Ball bearings, black rubber sealed (7x14x5mm) (2)

Body (1969 Chevrolet Blazer)

9112	**Body, Chevrolet Blazer (1969 - 1970) (clear, requires painting) (includes grille, side mirrors, door handles, windshield wipers, decals, window masks)**
9112X	**Body, Chevrolet Blazer (1969), complete (black) (includes grill, side mirrors, door handles, windshield wipers, front & rear bumpers, decals)**
9125	**Bumper pads/ bumper guards (chrome)/ 2.5x10 BCS (4)/ 2.7mm drill bit (fits #9126 or #9127 front bumpers)**
9127	**Bumper, front (chrome)/ bumper mount/ 3x10 BCS (2)**
9124	**Bumper, rear (chrome)/ bumper mount/ 3x10 BCS (2)**
9113	**Decal sheets, Chevrolet Blazer (1969 -1972)**
9115	**Door handles, left, right, and rear/ retainers (3)/ windshield wipers, left & right/ retainer (1)/ fuel cap/ fuel flange/ fuel cap mount/ 1.6x5 BCS (self-tapping) (7)/ 2.6x8 BCS (1)**
9123	**Grille, Chevrolet Blazer (1969 - 1970)/ grille retainers (5)/ headlight housing (2)/ headlight lens (2)/ turn signal lens (2)/ hood emblem/ hood emblem mount/ 2.6x8 BCS (5)/ 2.5x6 BCS (4)/ 1.6x5 BCS (self-tapping) (2) (fits #9112 body)**
9116	**Marker light housing (4)/ marker light mount (4)/ marker light lens (red (2), amber (2))/ reverse lens (left & right)/ 1.6x5 BCS (self-tapping) (8)**
9121	**Mirrors, side, chrome (left & right)/ o-rings (4)/ body clips (4) (fits #9112 body)**
9122	**Tail light housing, black (2)/ lens (2)/ retainers (left & right)/ 2.6x8 BCS (self-tapping) (4)**

Body (1972 Chevrolet Blazer)

9111	**Body, Chevrolet Blazer (1972) (clear, requires painting) (includes grille, side mirrors, side trim, door handles, windshield wipers, decals, window masks)**
9111X	**Body, Chevrolet Blazer (1972), complete (blue) (includes grille, side mirrors, door handles, windshield wipers, front & rear bumpers, decals)**
9125	**Bumper pads/ bumper guards (chrome)/ 2.5x10 BCS (4)/ 2.7mm drill bit (fits #9126 or #9127 front bumpers)**
9126	**Bumper, front (chrome)/ bumper mount/ lens (left and right) (2)/ lens mount (left and right) (2)/ 3x10 BCS (2)/ 2.6x6 BCS (4)**
9124	**Bumper, rear (chrome)/ bumper mount/ 3x10 BCS (2)**
9113	**Decal sheets, Chevrolet Blazer (1969 -1972)**
9115	**Door handles, left, right, and rear/ retainers (3)/ windshield wipers, left & right/ retainer (1)/ fuel cap/ fuel flange/ fuel cap mount/ 1.6x5 BCS (self-tapping) (7)/ 2.6x8 BCS (1)**
9120	**Grille, Chevrolet Blazer (1972)/ grille retainers (5)/ headlight housing (2)/ lens (2)/ 2.6x8 BCS (5)/ 2.5x6 BCS (4) (fits #9111 body)**
9116	**Marker light housing (4)/ marker light mount (4)/ marker light lens (red (2), amber (2))/ reverse lens (left & right)/ 1.6x5 BCS (self-tapping) (8)**
9118	**Mirrors, side, chrome (left & right)/ o-rings (4)/ body clips (4) (fits #9111 body)**
9117	**Side trim, Chevrolet Blazer (1972), left & right/ rear trim, upper & lower/ retainers, left, right & rear/ 2.6x8 BCS (23)/ 1.6x5 BCS (self-tapping) (5) (fits #9111 body)**
9119	**Tail light housing, chrome (2)/ lens (2)/ retainers (left & right)/ 2.6x8 BCS (self-tapping) (4)**

Body (1979 Chevrolet Blazer)

8130	**Body, Chevrolet Blazer (1979) (clear, requires painting)/ window masks**
8130G	**Body, Chevrolet Blazer (1979) (orange) (requires grille, side mirrors, door handles, windshield wipers, decals)**
8130A	**Body, Chevrolet Blazer (1979) (red) (requires grille, side mirrors, door handles, windshield wipers, decals)**
8130X	**Body, Chevrolet Blazer (1979), complete (orange) (includes grille, side mirrors, door handles, windshield wipers, front & rear bumpers, decals)**
8130R	**Body, Chevrolet Blazer (1979), complete (red) (includes grille, side mirrors, door handles, windshield wipers, front & rear bumpers, decals)**
8131	**Decal sheet, Chevrolet Blazer (1979)**
8132	**Door handles, left, right & rear tailgate/ windshield wipers, left & right/ retainers (2)/ 1.6x5 BCS (self-tapping) (7) (fits #8130 body)**
8134	**Grille, Chevrolet Blazer (1979)/ grille retainers (4)/ headlight housing (2)/ lens (2)/ 2.6x8 BCS (4)/ 2.5x6 BCS (2) (fits #8130 body)**
8133X	**Mirrors, side (folding) (fits #8130 body)**
8133	**Mirrors, side, chrome (left & right)/ o-rings (4)/ body clips (4) (fits #8130 body)**

8135	**Tail lights, left & right (assembled)/ tail light retainers, left & right/ side marker lights (assembled) (2)/ side marker retainers (2)/ mounting tape (2)/ 1.6x5 BCS (self-tapping) (4)/ 2.6x8 BCS (2) (fits #8130 body)**

Body (1979 Ford Bronco)

8010	**Body, Ford Bronco (1979) (clear, requires painting)/ decals/ window masks/ tailgate panel insert/ adhesive foam tape (2)**
8010X	**Body, Ford Bronco (1979), complete (black) (includes front and rear bumpers, push bar, rear body mount, grille, side mirrors, door handles, windshield wipers, spare tire mount, red and sunset decals) (requires #8072 inner fenders)**
8078R	**Decal sheet, Bronco, red (fits #8010 body)**
8078	**Decal sheet, Bronco, sunset (fits #8010 body)**
8075	**Door handles, left & right/ windshield wipers, left & right/ retainers (3)/ 1.6x5 BCS (self-tapping) (4) (fits #8010 body)**
8070	**Grille, Ford Bronco/ grille retainers (6)/ headlight housing (2)/ lens (2)/ 2.6x8 BCS (6)/ 2.5x6 BCS (2) (fits #8010 body)**
8073	**Mirrors, side, black (left & right)/ retainers (2)/ body clips (4) (fits #8010 body)**
8073X	**Mirrors, side, chrome (left & right)/ retainers (2)/ body clips (4) (fits #8010 body)**
8076	**Side trim, left & right (chrome)/ retainers/ LED lens/ 2.6x8 BCS (24) (fits #8010 body)**
8074	**Spare tire mount/ mounting bracket/ spare tire cover/ mounting hardware**
8077	**Tailgate panel insert (clear, requires painting)/ adhesive foam tape (2) (fits #8010 body)**
8071	**Tailgate panel/ tail light lens (2) (left & right) (fits #8010 body)**

Body (Land Rover Defender)

8011	**Body, Land Rover® Defender® (clear, trimmed, requires painting)/ window masks/ decal sheet**
8011A	**Body, Land Rover® Defender®, adventure orange (complete with ExoCage, inner fenders, fuel canisters, and jack)**
8011X	**Body, Land Rover® Defender®, graphite silver (painted)/ decals**
8011R	**Body, Land Rover® Defender®, red (painted)/ decals**
8012	**Decals, Land Rover® Defender®**
8016	**ExoCage (complete with assembly hardware; #8015 roof basket sold separately) (fits #8011 body)**
8019	**Fender brace, inner, front & rear**
8017	**Fender flares, front & rear (2 each) (fits #8011 or #8211 body)**
8018	**Fenders, inner, front & rear (2 each)/ rock light covers (8)**
8013	**Grille, Land Rover® Defender®/ grille mount (3)/ headlight housing (2)/ lens (2)/ headlight mount (2) (fits #8011 body)**
8020	**Mirrors, side (left & right)/ snorkel/ mounting hardware (fits #8011 body)**
8015	**Roof basket (requires #8016 ExoCage) (fits #8011 body)**
8021	**Spare tire mount/ mounting bracket/ screw pins (2)**
8014	**Tail light housing (2)/ lens (2)/ decals (left & right) (fits #8011 body)**

Body (Mercedes-Benz® G 500®)

8811	**Body, Mercedes-Benz® G 500® 4x4² (clear, requires painting)/ decals/ window masks (includes rear body post, grille, side mirrors, door handles, & windshield wipers)**
8812	**Decals, Mercedes-Benz® G 500® 4x4²**
8813X	**Grille, Mercedes-Benz® G 500® 4x4²/ grille mount/ grille insert/ headlight lens (2)/ headlight reflector (2)/ reflector lens (2)/ bumperette front (2)/ bumperette mount (2)/ turn signal housing (2)/ turn signal housing retainer (2)/ turn signal len**
8817	**Mirrors, side, black (left & right)/ o-rings (4)/ windshield wipers, left, right, & rear/ wiper retainers (2)/ body clips (4)/ 1.6x5 BCS (self-tapping) (3)**
8822	**Roof visor/ visor retainer/ visor lens (2)/ 2.6x6 BCS (3)/ 3x4 GS (4)**
8816X	**Side marker light housing (2)/ mount (2)/ lens (2)/ 1.6x7 BCS (self-tapping) (2)**
8814X	**Tail light lens (2)/ tail light housing (2)/ tail light housing mount (2)/ reverse lens (2)/ 1.6x5 BCS (4) (left & right)**

Body (Tactical Unit)

8215	**Body mounts & posts, front & rear (complete set)**
8211X	**Body, Tactical Unit, night camo (painted)/ decals**
8019	**Fender brace, inner, front & rear**
8017	**Fender flares, front & rear (2 each) (fits #8011 or #8211 body)**
8018	**Fenders, inner, front & rear (2 each)/ rock light covers (8)**
8020	**Mirrors, side (left & right)/ snorkel/ mounting hardware (fits #8011 body)**
8021	**Spare tire mount/ mounting bracket/ screw pins (2)**

Body (TRX-4® Sport)

8112	**Body with camper, TRX-4® Sport (clear, trimmed, requires painting)/ window masks/ decal sheet**
8111R	Body, TRX-4® Sport (clear, trimmed, die-cut for LED light kit, requires painting)/ window masks/ decal sheet
8111	**Body, TRX-4® Sport (clear, trimmed, requires painting)/ window masks/ decal sheet**
8113	Decal sheet, TRX-4® Sport
8120X	Expedition rack, complete (includes traction boards, shovel, axe, jack, fire extinguisher, fuel cans, & mounting hardware) (fits #8111 or #8111R body)
8120	Expedition rack/ mounting hardware (fits #8111 or #8111R body)
8116	Grille/ grille retainers (2)/ grille mount/ lens (2)/ 2.5x8 BCS (6) (fits #8111 or #8112 body)
8119	Mirrors, side (left & right)/ snorkel/ mounting hardware (fits #8111 or #8112 body)
8122	Shovel/ axe/ accessory mount/ mounting hardware
8118	**Spare tire mount/ mounting hardware**
8117	Tailgate panel/ tailgate retainers (2)/ tailgate mount/ tail light lens (2) (left & right)/ 2.5x8 BCS (4) (fits #8111 or #8112 body)
8121X	**Traction boards, blue/ mounting hardware**
8121G	**Traction boards, green/ mounting hardware**
8121A	**Traction boards, yellow/ mounting hardware**
8121	Traction boards/ mounting hardware

Body Accessories

1926	**Antenna caps, vinyl (2)/ antenna spool**
1726	Antenna, tube (1)/ vinyl antenna cap (1)/ wire retainer (1)
1834	Body clips (12) (standard size)
1834A	**Body clips, black (12) (standard size)**
3934	**Body clips, heavy duty (12)**
3934A	Body clips, heavy duty (black) (12)
8215	Body mounts & posts, front & rear (complete set)
8115	Body posts, front & rear
4915	Body washers, foam adhesive (10)
2514	**Decal sheet, racing sponsors**
8081	**Fender extensions (4)/ 3x8 flat-head screws (24) (requires #8080 narrow inner fenders)**
8080	**Fenders, inner (narrow), front & rear (2 each)/ rock light covers (8)/ battery plate/ 3x8 flat-head screws (4)**
8072	**Fenders, inner, front & rear (2 each)/ rock light covers (8)/ battery plate/ 3x8 flat-head screws (4)**
9950	**Official Team Traxxas® racing decal set (flag logo/ 6-color)**

Bumpers & Skidplates

8234	**Bumper D-Rings, grey (front or rear)/ 2x12 CS (4)**
8234R	Bumper D-rings, red (front or rear)/ 2.0x12 CS (4)
8067X	Bumper mounts, front & rear/ bumper mount, rear (offset)
8237	Bumper mounts, front & rear/ screw pins (4)
8124	Bumper, front (178mm wide)/ winch/ 2.6x8 BCS (1)
8235	**Bumper, front/ winch**
8236	**Bumper, rear**
8125	Bumper, rear (176mm wide)
8238	Skidplate/ lower gear cover

Chassis & Attachments

8215	Body mounts & posts, front & rear (complete set)
8224	Box, receiver (sealed)/ wire cover/ foam pads/ silicone grease/ 3x8 BCS (5)/ 2.5x8 CS (2)
8058	**Chassis conversion kit, TRX-4® (long to short wheelbase) (includes rear upper & lower suspension links, front & rear inner fenders, short female half shaft, battery tray, 3x8mm FCS (4))**
8057	**Chassis conversion kit, TRX-4® (short to long wheelbase) (includes rear upper & lower suspension links, front & rear shock towers, long female half shaft)**
8220	Chassis rails, 448mm (steel) (left & right)
8218	Floor pans, left & right
8224X	**Receiver box cover (for use only with #8224 receiver box & #2260 BEC)/ foam pads/ seals/ silicone grease**
8219	Rock sliders, left & right
8225	**Seal kit, receiver box (includes o-ring, seals, and silicone grease)**
8240X	Servo mount, 2-speed/ servo mount, T-Lock/ wire clips
8239	Servo mount, steering/ chassis crossmember
8216	Shock towers, front & rear (left & right)
8118	**Spare tire mount/ mounting hardware**
8226	Tray, battery

Differential Components

8281	**Carrier, differential/ differential slider/ T-Lock fork**
8280A	**Differential cover, front or rear (black)**
8280X	**Differential cover, front or rear (chrome-plated)**
8280	**Differential cover, front or rear (grey)**
8280R	Differential cover, front or rear (red)
8195	**Differential, locking, front and rear (assembled) (includes T-Lock cables and servo)**

TRX-4 SPORT UNASSEMBLED KIT (82010-4)

8282	**Gear set, differential (output gears (2), spider gears (4), spider gear shaft (2))**
8295	Output drive, transmission or differential (pin retainer (1)/ drive cup (1)/ drive ball (1)/ drive pin (1)/ 3x11 screw pin (1)/ cross pin (black) (1) 3x6 BCS with threadlock (1))
8279	Ring gear, differential/ pinion gear, differential
8279R	**Ring gear, differential/ pinion gear, differential (machined)**
8287	**Ring gear, differential/ pinion gear, differential (overdrive, machined)**
8288	**Ring gear, differential/ pinion gear, differential (underdrive, machined)**
8297	Spool/ differential housing plug/ e-clip

Driveline Components

8250	Half shafts, center (internal splined, front (2) & internal splined, rear (2)/ external splined (2)/ pin retainer (4)) (plastic parts only)
8269	Wheel hubs, 12mm hex (2)/ stub axle pins (2) (steel)
8269X	**Wheel hubs, 12mm hex, 6061-T6 aluminum (blue-anodized) (4)/ screw pin (4)**
8269A	**Wheel hubs, 12mm hex, 6061-T6 aluminum (charcoal gray-anodized) (4)/ screw pin (4)**
8269G	**Wheel hubs, 12mm hex, 6061-T6 aluminum (green-anodized) (4)/ screw pin (4)**
8269R	**Wheel hubs, 12mm hex, 6061-T6 aluminum (red-anodized) (4)/ screw pin (4)**

Hardware

1552	Backplate screws (3x8mm cap-head machine) (6)/washers (6)/ wrench
1834	**Body clips (12) (standard size)**
1834A	Body clips, black (12) (standard size)
3934	**Body clips, heavy duty (12)**
3934A	**Body clips, heavy duty (black) (12)**
8167X	**Hardware kit, stainless steel, beadlock rings (contains stainless steel hardware for 4 wheels)**
8298	**Hardware kit, stainless steel, TRX-4® (contains all stainless steel hardware used on TRX-4)**
8151	**Hardware kit, stainless steel, TRX-4® High Lift Kit (contains all stainless steel hardware used on TRX-4® Long Arm Lift Kit)**
5476X	**Hex wrenches; 1.5mm, 2mm, 2.5mm, 3mm, 2.5mm ball**
3647	**Nuts, 4mm flanged nylon locking (steel, serrated) (8)**
8347	Nuts, 4mm flanged nylon locking, serrated (black) (10)
1747R	**Nuts, aluminum, flanged, serrated (4mm) (blue-anodized) (4)**
1747G	**Nuts, aluminum, flanged, serrated (4mm) (green-anodized) (4)**
1747P	**Nuts, aluminum, flanged, serrated (4mm) (pink-anodized) (4)**
1985	PTFE-coated washers, 5x8x0.5mm (20) (use with ball bearings)
8221	Screw pin, 3x10mm (6)
3229	Screws, 2.5x10mm cap-head machine (hex drive) (6)
2523	Screws, 2.5x10mm countersunk machine (hex drive) (6)
3236	Screws, 2.5x12mm cap-head machine (6)
2618	Screws, 2.5x16mm cap-head machine (6)
3215	Screws, 2.5x6mm cap-head machine (hex drive) (6)
2617	Screws, 2.5x8mm button-head machine (hex drive) (6)
3965	Screws, 2.5x8mm cap-head machine (6)
2524	Screws, 2.5x8mm countersunk machine (hex drive) (6)
8299	Screws, 2.6x12mm button-head, self-tapping (hex drive) (6)
8167	Screws, 2x10mm cap-head, self-tapping (hex drive) (10)
2564	Screws, 2x8mm cap-head machine (hex drive) (6)
2577	Screws, 3x10mm button-head machine (hex drive) (6)
4859	Screws, 3x10mm flat-head machine (hex drive) (4)
2578	Screws, 3x12mm button-head machine (hex drive) (6)
2579	Screws, 3x15mm button-head machine (hex drive) (6)
2591	Screws, 3x23mm button-head machine (hex drive) (6)
2581	Screws, 3x25mm button-head machine (hex drive) (6)
2616	Screws, 3x27mm button-head machine (hex drive) (6)
2582	Screws, 3x30mm button-head machine (hex drive) (6)
2575	Screws, 3x6mm button-head machine (hex drive) (6)
3932	Screws, 3x6mm flat-head machine (hex drive) (6)
2576	Screws, 3x8mm button-head machine (hex drive) (6)
3931	Screws, 3x8mm flat-head machine (hex drive) (6)
3933	Screws, 4x16mm button-head machine (hex drive) (6)

LED Light Accessories

8031	**3-in-1 wire harness, LED light kit**
8089	**4-in-2 wire harness, LED light kit**
8028	**LED lights, power supply (regulated, 3V, 0.5-amp)/ 3-in-1 wire harness**
8026X	**LED rock light kit, TRX-4®/TRX-6™ (requires #8028 power supply and #8018, #8072, or #8080 inner fenders)**

LED Lights (1969-1972 Chevrolet Blazer)

8090	**LED light set, complete with power supply (contains headlights, tail lights, side marker lights, & distribution block) (fits #9111 or 9112 body)**

LED Lights (1979 Chevrolet Blazer)

8039	**LED light set (contains headlights, tail lights, side marker lights, distribution block (fits #8130 body, requires #8028 power supply)**
8038	**LED light set, complete with power supply (contains headlights, tail lights, side marker lights, distribution block, and power supply) (fits #8130 body)**

LED Lights (1979 Ford Bronco)

8036	**LED light set (contains headlights, tail lights, side marker lights, & distribution block) (fits #8010 body, requires #8028 power supply)**
8035	**LED light set, complete with power supply (contains headlights, tail lights, side marker lights, & distribution block) (fits #8010 body)**
8037	**LED lights, high/low switch (for #8035 or #8036 LED light kits)**

LED Lights (Land Rover Defender)

8031	**3-in-1 wire harness, LED light kit**
8027	**LED headlight/tail light kit (fits #8011 body, requires #8028 power supply)**
8025	**LED light bar (Rigid®), TRX-4 (requires #8028 power supply)**
8029	**LED light bar kit (Rigid®)/power supply, TRX-4®**
8030	**LED light set, complete (contains rock light kit, LED light bar (Rigid®), LED headlight/tail light kit, power supply, & 3-in-1 wire harness) (fits #8011 body)**
8028	**LED lights, power supply (regulated, 3V, 0.5-amp)/ 3-in-1 wire harness**

LED Lights (Mercedes-Benz® G 500® 4x4²)

8899	**LED light set (contains headlights, tail lights, roof lights, and distribution block) (fits #8811 or #8825 body, requires #8028 power supply)**
8898	**LED light set, complete with power supply (contains headlights, tail lights, roof lights, & distribution block) (fits #8811 or #8825 body)**

LED Lights (TRX-4® Sport)

8089	**4-in-2 wire harness, LED light kit**
8086	**LED expedition rack scene light kit (fits #8111 body, requires #8028 power supply)**
8084	**LED headlight/tail light kit (fits #8111 or #8112 body, requires #8028 power supply)**
8088	**LED light bar, front bumper (fits #8124 front bumper, requires #8028 power supply)**
8087	**LED light bar, roof lights (fits #8111 body, requires #8028 power supply)**
8085	**LED light set, complete with power supply (contains headlights, tail lights, & distribution block) (fits #8111 or #8112 body)**

Long Arm Lift Kit

8162X	**Body, GTS shock, long (aluminum, blue-anodized) (1) (for use with #8140X TRX-4® Long Arm Lift Kit)**
8162R	**Body, GTS shock, long (aluminum, red-anodized) (1) (for use with #8140R TRX-4® Long Arm Lift Kit)**
8162	**Body, GTS shock, long (silver aluminum) (1) (for use with #8140 TRX-4® Long Arm Lift Kit)**
8148	**Cable, T-lock (extra long) (for use with TRX-4® Long Arm Lift Kit)**
8147	**Cable, T-lock (medium) (for use with TRX-4® Long Arm Lift Kit)**
8150	**Driveshaft extension kit, center (includes internal splined, x-long (2), internal splined, long (1) and internal splined, medium (1)) (for use with TRX-4® Long Arm Lift Kit)**
8140	**Long Arm Lift Kit, TRX-4®, complete**
8140X	**Long Arm Lift Kit, TRX-4®, complete (includes blue powder coated links, blue-anodized shocks)**
8140R	**Long Arm Lift Kit, TRX-4®, complete (includes red powder coated links, red-anodized shocks)**
8149	**Rod ends, extended (standard (4), angled (4))/ hollow balls (8) (for use with TRX-4® Long Arm Lift Kit)**
8141	**Servo mount, steering (for use with TRX-4® Long Arm Lift Kit)**
8161	**Shock shaft, 3x57mm (GTS) (2) (includes bump stops) (for use with TRX-4® Long Arm Lift Kit)**
8160X	**Shocks, GTS, aluminum (blue-anodized) (assembled without springs) (4) (for use with #8140X TRX-4® Long Arm Lift Kit)**
8160R	**Shocks, GTS, aluminum (red-anodized) (assembled without springs) (4) (for use with #8140R TRX-4® Long Arm Lift Kit)**
8160	**Shocks, GTS, silver aluminum (assembled without springs) (4) (for use with #8140 TRX-4® Long Arm Lift Kit)**
8153	**Springs, shock, long (natural finish) (GTS) (0.29 rate, white stripe) (for use with TRX-4® Long Arm Lift Kit)**
8154	**Springs, shock, long (natural finish) (GTS) (0.39 rate, orange stripe) (for use with TRX-4® Long Arm Lift Kit)**
8155	**Springs, shock, long (natural finish) (GTS) (0.47 rate) (included with TRX-4® Long Arm Lift Kit)**
8156	**Springs, shock, long (natural finish) (GTS) (0.54 rate, green stripe) (for use with TRX-4® Long Arm Lift Kit)**

8157	Springs, shock, long (natural finish) (GTS) (0.62 rate, blue stripe) (for use with TRX-4® Long Arm Lift Kit)
8146X	Steering link, 5x117mm (1)/ draglink, 5x60mm (1)/ panhard link, 5x63mm (blue powder coated steel) (assembled with hollow balls) (for use with #8140X TRX-4® Long Arm Lift Kit)
8146R	Steering link, 5x117mm (1)/ draglink, 5x60mm (1)/ panhard link, 5x63mm (red powder coated steel) (assembled with hollow balls) (for use with #8140R TRX-4® Long Arm Lift Kit)
8144X	Suspension link, front upper, 5x68mm (1) (blue powder coated steel) (assembled with hollow balls) (for use with #8140X TRX-4® Long Arm Lift Kit)
8144R	Suspension link, front upper, 5x68mm (1) (red powder coated steel) (assembled with hollow balls) (for use with #8140R TRX-4® Long Arm Lift Kit)
8144	Suspension link, front upper, 5x68mm (1) (steel) (assembled with hollow balls) (for use with #8140 TRX-4® Long Arm Lift Kit)
8143	Suspension links, front lower (2) (5x104mm, steel) (assembled with hollow balls) (for use with #8140 TRX-4® Long Arm Lift Kit)
8143X	Suspension links, front lower, blue (2) (5x104mm, powder coated steel) (assembled with hollow balls) (for use with #8140X TRX-4® Long Arm Lift Kit)
8143R	Suspension links, front lower, red (2) (5x104mm, powder coated steel) (assembled with hollow balls) (for use with #8140R TRX-4® Long Arm Lift Kit)
8145	Suspension links, rear lower (2) (5x115mm, steel) (assembled with hollow balls) (for use with #8140 TRX-4® Long Arm Lift Kit)
8145X	Suspension links, rear lower, blue (2) (5x115mm, powder coated steel) (assembled with hollow balls) (for use with #8140X TRX-4® Long Arm Lift Kit)
8145R	Suspension links, rear lower, red (2) (5x115mm, powder coated steel) (assembled with hollow balls) (for use with #8140R TRX-4® Long Arm Lift Kit)
8142	Suspension links, rear upper (2) (5x115mm, steel) (assembled with hollow balls) (for use with #8140 TRX-4® Long Arm Lift Kit)
8142X	Suspension links, rear upper, blue (2) (5x115mm, powder coated steel) (assembled with hollow balls) (for use with #8140X TRX-4® Long Arm Lift Kit)
8142R	Suspension links, rear upper, red (2) (5x115mm, powder coated steel) (assembled with hollow balls) (for use with #8140R TRX-4® Long Arm Lift Kit)
8172	Tires and wheels, assembled (Method 105 2.2" black chrome beadlock wheels, Canyon Trail 5.3x2.2" tires, foam inserts) (1 left, 1 right)
8181	Tires and wheels, assembled, glued (TRX-4® Sport 2.2" wheels, Canyon Trail 5.3x2.2" tires) (2)
8170	Tires, Canyon Trail 5.3x2.2"/ foam inserts (2)
8171	Wheels, Method 105 2.2" (black chrome, beadlock) (beadlock rings sold separately)
8171A	Wheels, Method 105 2.2" (charcoal gray, beadlock) (beadlock rings sold separately)
8180	Wheels, TRX-4® Sport 2.2 (2)

Motors & Electronics

1926	Antenna caps, vinyl (2)/ antenna spool
1726	Antenna, tube (1)/ vinyl antenna cap (1)/ wire retainer (1)
2262	BEC, complete (includes receiver box cover and seals)
2064	Gear set (for 2065 waterproof sub-micro servo)
2064X	Gear set, metal (for 2065X waterproof sub-micro servo)
2072X	Gear set, metal (for 2070, 2075 servos)
2252	Gear set, metal (for 2250, 2255 servos)
2072R	Gear set, metal, high speed (for 2070, 2075 servos)
8290X	Motor mount plate, 6061-T6 aluminum (blue-anodized)
8290A	Motor mount plate, 6061-T6 aluminum (charcoal gray-anodized)
8290G	Motor mount plate, 6061-T6 aluminum (green-anodized)
8290R	Motor mount plate, 6061-T6 aluminum (red-anodized)
3975R	Motor, Titan® 550, reverse rotation (21-turns/ 14 volts) (1)
8290	Plate, motor/ upper spur gear cover
2254	Servo case, aluminum (blue-anodized) (middle) (for 2250 servo)
2253	Servo case, aluminum (red-anodized) (middle) (for 2255 servo)
2251	Servo case, plastic (top, middle, bottom)/ gaskets/ hardware (for 2250, 2255 servos)
2063	Servo case/gaskets (for 2065 waterproof sub-micro servo)
2063X	Servo case/gaskets (for 2065X metal gear, waterproof, sub-micro servo)
5669	Servo horn (with built-in spring and hardware) (for Summit locking differential)
2075R	Servo, digital high-speed, metal gear (ball bearing), waterproof
2250	Servo, digital high-torque 330 coreless, metal gear (ball bearing), waterproof (#2262 external BEC and #8247X metal servo horn recommended for optimal performance)
2255	Servo, digital high-torque 400 brushless, metal gear (ball bearing), waterproof (#2262 external BEC and #8247X metal servo horn recommended for optimal performance)
2075X	Servo, digital high-torque, metal gear (ball bearing), waterproof
2065	Servo, sub-micro, waterproof
2065X	Servo, sub-micro, waterproof, metal gear
3025	XL-5HV 3s Electronic Speed Control, waterproof (low-voltage detection, fwd/rev/brake)
2261	Y-harness, BEC

Radio System, Batteries & Chargers

2849X	4000mAh 11.1v 3-Cell 25C LiPo Battery
2872X	5000mAh 11.1v 3-Cell 25C LiPo Battery
2842X	5000mAh 7.4v 2-Cell 25C LiPo Battery
2843X	5800mAh 7.4v 2-Cell 25C LiPo Battery
2869X	7600mAh 7.4v 2-Cell 25C LiPo Battery
2976	AC to DC converter, 40W
2938X	Adapter, Traxxas® iD® LiPo battery (adapts Traxxas iD batteries to separate balance ports)
1726	Antenna, tube (1)/ vinyl antenna cap (1)/ wire retainer (1)
2943	Battery charge indicators (green (4), blue (4), grey (4))
6548	Battery door, transmitter (replacement for #6516, 6517, 6528, 6529, 6530 transmitters)
8222	Battery strap (for 2200 2-cell and 1400 3-cell LiPo batteries)
2914	Battery, Power Cell AA Alkaline (4)
2923X	Battery, Power Cell, 3000mAh (NiMH, 7-C flat, 8.4V)
2940X	Battery, Series 3 Power Cell, 3300mAh (NiMH, 7-C flat, 8.4V)
2950X	Battery, Series 4 Power Cell, 4200mAh (NiMH, 7-C flat, 8.4V)
2960X	Battery, Series 5 Power Cell, 5000mAh (NiMH, 7-C flat, 8.4V)
2983	Battery/charger completer pack (includes #2969 2-amp NiMH peak detecting AC charger (1), #2923X 3000mAh 8.4V 7-cell NiMH battery (1))
2992	Battery/charger completer pack (includes #2970 iD® charger (1), #2843X 5800mAh 7.4V 2-cell 25C LiPo battery (1))
2994	Battery/charger completer pack (includes #2970 iD® charger (1), #2849X 4000mAh 11.1v 3-Cell 25C LiPo Battery (1))
2991	Battery/charger completer pack (includes #2972 Dual iD® charger (1), #2869X 7600mAh 7.4V 2-cell 25C LiPo battery (2))
2262	BEC, complete (includes receiver box cover and seals)
2975	Charger, DC, 4 amp (6 - 7 cell, 7.2 - 8.4 volt, NiMH)
2972	Charger, EZ-Peak® Dual, 100W, NiMH/LiPo with iD® Auto Battery Identification
2973	Charger, EZ-Peak® Live Dual, 200W, NiMH/LiPo with iD® Auto Battery Identification
2971	Charger, EZ-Peak® Live, 100W, NiMH/LiPo with iD® Auto Battery Identification
2970	Charger, EZ-Peak® Plus, 4 amp, NiMH/LiPo with iD® Auto Battery Identification
6525	Communication link, telemetry expander
6541	Connector, power tap (with cable) (long)/ wire tie
6512	Cover plate, Traxxas Link™ Wireless Module
2978	Fuse, charger, 5A (2) (for #2974, 2975, 2977)
2064	Gear set (for 2065 waterproof sub-micro servo)
2064X	Gear set, metal (for 2065X waterproof sub-micro servo)
2072X	Gear set, metal (for 2070, 2075 servos)
2252	Gear set, metal (for 2250, 2255 servos)
2072R	Gear set, metal, high speed (for 2070, 2075 servos)
2968X	LiPo cell voltage checker/balancer (includes #2938X adapter for Traxxas® iD® batteries)
2968	LiPo cell voltage checker/balancer (requires #2938X adapter for Traxxas® iD® batteries)
6561	Mount, telemetry expander
6535	Mount, temperature sensor (electric motors)/ wire tie/ thermal pad
6519	Receiver, micro, TQ 2.4GHz (3-channel)
6533	Receiver, micro, TQi 2.4GHz with telemetry & TSM (5-channel)
6552	Seal kit, expander box (includes o-ring, seals, and silicone grease)
6526	Sensor, auto-detectable, temperature
6527	Sensor, auto-detectable, voltage
6521	Sensor, temperature and voltage (long)
2254	Servo case, aluminum (blue-anodized) (middle) (for 2250 servo)
2253	Servo case, aluminum (red-anodized) (middle) (for 2255 servo)
2251	Servo case, plastic (top, middle, bottom)/ gaskets/ hardware (for 2250, 2255 servos)
2063	Servo case/gaskets (for 2065 waterproof sub-micro servo)
2063X	Servo case/gaskets (for 2065X metal gear, waterproof, sub-micro servo)
2075R	Servo, digital high-speed, metal gear (ball bearing), waterproof
2250	Servo, digital high-torque 330 coreless, metal gear (ball bearing), waterproof (#2262 external BEC and #8247X metal servo horn recommended for optimal performance)
2255	Servo, digital high-torque 400 brushless, metal gear (ball bearing), waterproof (#2262 external BEC and #8247X metal servo horn recommended for optimal performance)
2075X	Servo, digital high-torque, metal gear (ball bearing), waterproof
2065	Servo, sub-micro, waterproof

TRX-4 SPORT UNASSEMBLED KIT (82010-4)

2065X Servo, sub-micro, waterproof, metal gear
6553X Telemetry expander 2.0 and GPS module 2.0, TQi radio system
6550X Telemetry expander 2.0, TQi radio system (for use only with #6551X GPS module)
6551X Telemetry GPS module 2.0, TQi radio system (for use only with #6550X telemetry expander)
6509R TQi 2.4 GHz High Output radio system, 2-channel, Traxxas Link™ enabled, TSM (2-ch transmitter, 5-ch micro receiver)
6507R TQi 2.4 GHz High Output radio system, 4-channel with Traxxas Link™ Wireless Module, TSM (4-ch transmitter, 5-ch micro receiver)
6516 Transmitter, TQ 2.4GHz, 2-channel (transmitter only)
6530 Transmitter, TQi Traxxas Link™ enabled, 2.4GHz high output, 4-channel (transmitter only)
6511 Traxxas Link™ Wireless Module
2261 Y-harness, BEC

Scale Details

8120X Expedition rack, complete (includes traction boards, shovel, axe, jack, fire extinguisher, fuel cans, & mounting hardware) (fits #8111 or #8111R body)
8022T Fuel canisters (black) (2)/ 3x8 FCS (1)
8022R Fuel canisters (blue) (2)/ 3x8 FCS (1)
8022 Fuel canisters (red) (2)/ 3x8 FCS (1)
8022X Fuel canisters (white) (2)/ 3x8 FCS (1)
8022A Fuel canisters (yellow) (2)/ 3x8 FCS (1)
8023T Jack (black) (1)/ 2x8 BCS (1)
8023 Jack (red) (1)/ 2x8 BCS (1)
8122 Shovel/ axe/ accessory mount/ mounting hardware
8121X Traction boards, blue/ mounting hardware
8121G Traction boards, green/ mounting hardware
8121A Traction boards, yellow/ mounting hardware
8121 Traction boards/ mounting hardware

Shocks (GTS)

8266 Body, GTS shock (aluminum, silver-anodized) (1)
8266X Body, GTS shock (hard-anodized, PTFE-coated aluminum) (1)
8266A Body, GTS shock, aluminum (blue-anodized) (1)
8266G Body, GTS shock, aluminum (green-anodized) (1)
8266R Body, GTS shock, aluminum (red-anodized) (1)
8264 Caps & spring retainers, GTS shocks (upper cap (2)/ hollow balls (4)/ bottom cap (2)/ upper retainer (2)/ lower retainer (2))
8274 Hollow ball set, complete, TRX-4® (aluminum, PTFE-coated)
5475 Multi-tool (plastic)
8261 Piston, damper (red) (4)/ e-clips (8)
8262 Rebuild kit, GTS shocks (x-rings, o-rings, pistons, bushings, e-clips, and rod ends)
8263 Shock shaft, 3x47mm (GTS) (2)
8263T Shock shaft, 3x47mm (GTS) (titanium nitride-coated) (2)
8260X Shocks, GTS hard-anodized, PTFE-coated aluminum bodies with TiN shafts (assembled with spring retainers) (2)
8260A Shocks, GTS, aluminum (blue-anodized) (assembled with spring retainers) (2)
8260G Shocks, GTS, aluminum (green-anodized) (assembled with spring retainers) (2)
8260R Shocks, GTS, aluminum (red-anodized) (assembled with spring retainers) (2)
8260 Shocks, GTS, silver aluminum (assembled with spring retainers) (2)
1666 Silicone shock oil (30 wt)

Slipper Clutch Components

8292 Input shaft/ output shaft (transmission)
8286 Output shafts (transfer case), front & rear
8254 Rebuild kit, slipper clutch (steel disc (2)/ friction insert (2)/ 4.0mm NL (1)/ spring washers (4), metal washer (1))
8249 Slipper eliminator plate

Springs

8042 Springs, shock (natural finish) (GTS) (0.22 rate, yellow stripe) (2)
8043 Springs, shock (natural finish) (GTS) (0.30 rate, white stripe) (2)
8044 Springs, shock (natural finish) (GTS) (0.39 rate, orange stripe) (2)
8041 Springs, shock (natural finish) (GTS) (0.45 rate) (2)
8040 Springs, shock (natural finish) (GTS) (0.54 rate, green stripe) (2)
8045 Springs, shock (natural finish) (GTS) (0.61 rate, blue stripe) (2)

Spur Gears & Pinion Gears

6746 Gear, 10-T pinion (32-p) (steel)/ set screw
6747 Gear, 11-T pinion (32-p) (steel)/ set screw
3942X Gear, 12-T pinion (32-p), heavy duty (machined, hardened steel)/ set screw
3943X Gear, 13-T pinion (32-p), heavy duty (machined, hardened steel)/ set screw
3944X Gear, 14-T pinion (32-p), heavy duty (machined, hardened steel)/ set screw
3945X Gear, 15-T pinion (32-p), heavy duty (machined, hardened steel)/ set screw
3946X Gear, 16-T pinion (32-p), heavy duty (machined, hardened steel)/ set screw
3947X Gear, 17-T pinion (32-p), heavy duty (machined, hardened steel)/ set screw
3948X Gear, 18-T pinion (32-p), heavy duty (machined, hardened steel)/ set screw
3949X Gear, 19-T pinion (32-p), heavy duty (machined, hardened steel)/ set screw
3950X Gear, 20-T pinion (32-p), heavy duty (machined, hardened steel)/ set screw
3951X Gear, 21-T pinion (32-p), heavy duty (machined, hardened steel)/ set screw
3952X Gear, 22-T pinion (32-p), heavy duty (machined, hardened steel)/ set screw
6745 Gear, 9-T pinion (32-p) (steel)/ set screw
8052 Spur gear, 39-tooth (32-pitch)
8053 Spur gear, 45-tooth (32-pitch)

Steering Components

8232 Caster blocks (portal drive), left & right/ kingpin bushings (4)
8232X Caster blocks, 6061-T6 aluminum (blue-anodized), left and right
8232A Caster blocks, 6061-T6 aluminum (charcoal gray-anodized), left and right
8232G Caster blocks, 6061-T6 aluminum (green-anodized), left and right
8232R Caster blocks, 6061-T6 aluminum (red-anodized), left and right
2072X Gear set, metal (for 2070, 2075 servos)
2072R Gear set, metal, high speed (for 2070, 2075 servos)
8274 Hollow ball set, complete, TRX-4® (aluminum, PTFE-coated)
5355 Hollow ball, tall centered (2)/ tall offset hollow ball (2)/ bump steer adjustment shims; 3.5mm (2), 1.17mm (2)
8275 Rod end set, complete (standard (10), angled 10-degrees (8), offset (4))
8276 Rod ends (10)
8277 Rod ends, angled 10-degrees (8)
2742 Rod ends, long (6)/ hollow ball connectors (6)
8278 Rod ends, offset (4)
8247X Servo horn, steering, metal/ 3x14 BCS (1)
2075R Servo, digital high-speed, metal gear (ball bearing), waterproof
2075X Servo, digital high-torque, metal gear (ball bearing), waterproof
5529 Shim set, 3x7x1mm (2), 3x6x0.5mm (4), 3x7x2mm (2)/ hollow balls, captured (4)
8246 Steering link, 5x60mm (1)/ draglink, 5x117mm (1) (steel)
8243 Suspension link, front, 5x100mm (lower) (steel) (2)
8244 Suspension link, front, 5x63mm (upper) (steel) (2)
8245 Suspension link, rear, 5x121mm (upper or lower) (steel) (2)

Suspension Linkage

8058 Chassis conversion kit, TRX-4® (long to short wheelbase) (includes rear upper & lower suspension links, front & rear inner fenders, short female half shaft, battery tray, 3x8mm FCS (4))
8057 Chassis conversion kit, TRX-4® (short to long wheelbase) (includes rear upper & lower suspension links, front & rear shock towers, long female half shaft)
8274 Hollow ball set, complete, TRX-4® (aluminum, PTFE-coated)
5355 Hollow ball, tall centered (2)/ tall offset hollow ball (2)/ bump steer adjustment shims; 3.5mm (2), 1.17mm (2)
8275 Rod end set, complete (standard (10), angled 10-degrees (8), offset (4))
8276 Rod ends (10)
8277 Rod ends, angled 10-degrees (8)
2742 Rod ends, long (6)/ hollow ball connectors (6)
8278 Rod ends, offset (4)
5529 Shim set, 3x7x1mm (2), 3x6x0.5mm (4), 3x7x2mm (2)/ hollow balls, captured (4)
8243 Suspension link, front, 5x100mm (lower) (steel) (2)
8244 Suspension link, front, 5x63mm (upper) (steel) (2)
8248 Suspension link, rear, 5x109mm (upper or lower) (steel) (2)
8245 Suspension link, rear, 5x121mm (upper or lower) (steel) (2)

Team Traxxas Items

2514 Decal sheet, racing sponsors
6160X DVD, Maxx® Power! Full Throttle Action (sleeve)
9950 Official Team Traxxas® racing decal set (flag logo/ 6-color)
9909 Traxxas® racing banner, red & black (3x7 feet)

Tires & Wheels

8169T Beadlock rings, black (1.9") (aluminum) (4)/ 2x10 CS (48)
8168T Beadlock rings, black (2.2") (aluminum) (4)/ 2x10 CS (48)
8169X Beadlock rings, blue (1.9") (aluminum) (4)/ 2x10 CS (48)
8168X Beadlock rings, blue (2.2") (aluminum) (4)/ 2x10 CS (48)
8169G Beadlock rings, green (1.9") (aluminum) (4)/ 2x10 CS (48)
8168G Beadlock rings, green (2.2") (aluminum) (4)/ 2x10 CS (48)

8169A Beadlock rings, orange (1.9") (aluminum) (4)/ 2x10 CS (48)
8168A Beadlock rings, orange (2.2") (aluminum) (4)/ 2x10 CS (48)
8169R Beadlock rings, red (1.9") (aluminum) (4)/ 2x10 CS (48)
8168R Beadlock rings, red (2.2") (aluminum) (4)/ 2x10 CS (48)
8169 Beadlock rings, satin (1.9") (aluminum) (4)/ 2x10 CS (48)
8168 Beadlock rings, satin (2.2") (aluminum) (4)/ 2x10 CS (48)
8174 Tires and wheels, assembled (Method 105 1.9" black chrome beadlock wheels, Canyon Trail 4.6x1.9" tires, foam inserts) (1 left, 1 right)
8172 Tires and wheels, assembled (Method 105 2.2" black chrome beadlock wheels, Canyon Trail 5.3x2.2" tires, foam inserts) (1 left, 1 right) (for use with TRX-4 Long Arm Lift Kit)
8166X Tires and wheels, assembled, glued (1.9" chrome wheels, Canyon Trail 4.6x1.9" tires) (4)/ center caps (4)/ decal sheet (requires #8255A extended stub axle)
8166 Tires and wheels, assembled, glued (1.9" chrome wheels, Canyon Trail 4.6x1.9" tires) (2)/ center caps (2)/ decal sheet (requires #8255A extended stub axle)
8183X Tires and wheels, assembled, glued (1.9" classic chrome wheels, Canyon Trail 4.6x1.9" tires) (4)/ center caps (4) (requires #8255A extended stub axle)
8273 Tires and wheels, assembled, glued (Tactical 1.9" wheels, Canyon Trail 4.6x1.9" tires) (2)
8272X Tires and wheels, assembled, glued (TRX-4® 1.9" satin beadlock wheels, Canyon Trail 4.6x1.9" tires) (2)
8272 Tires and wheels, assembled, glued (TRX-4® 1.9" wheels, Canyon Trail 4.6x1.9" tires) (2)
8179 Tires and wheels, assembled, glued (TRX-4® Sport 1.9" wheels, Canyon Trail 4.6x1.9" tires) (2)
8181 Tires and wheels, assembled, glued (TRX-4® Sport 2.2" wheels, Canyon Trail 5.3x2.2" tires) (2) (for use with TRX-4 Long Arm Lift Kit)
8270 Tires, Canyon Trail 4.6x1.9" (S1 compound)/ foam inserts (2)
8170 Tires, Canyon Trail 5.3x2.2"/ foam inserts (2) (for use with TRX-4 Long-Arm Lift Kit)
8269 Wheel hubs, 12mm hex (2)/ stub axle pins (2) (steel)
8269X Wheel hubs, 12mm hex, 6061-T6 aluminum (blue-anodized) (4)/ screw pin (4)
8269A Wheel hubs, 12mm hex, 6061-T6 aluminum (charcoal gray-anodized) (4)/ screw pin (4)
8269G Wheel hubs, 12mm hex, 6061-T6 aluminum (green-anodized) (4)/ screw pin (4)
8269R Wheel hubs, 12mm hex, 6061-T6 aluminum (red-anodized) (4)/ screw pin (4)
8173 Wheels, Method 105 1.9" (black chrome, beadlock) (beadlock rings sold separately)
8173A Wheels, Method 105 1.9" (charcoal gray, beadlock) (beadlock rings sold separately)
8171 Wheels, Method 105 2.2" (black chrome, beadlock) (beadlock rings sold separately) (for use with TRX-4 Long Arm Lift Kit)
8171A Wheels, Method 105 2.2" (charcoal gray, beadlock) (beadlock rings sold separately) (for use with TRX-4 Long Arm Lift Kit)
8268 Wheels, Tactical 1.9 (2)
8271 Wheels, TRX-4® 1.9 (2)
8271X Wheels, TRX-4® 1.9 (satin beadlock) (2)
8178 Wheels, TRX-4® Sport 1.9 (2)
8180 Wheels, TRX-4 Sport 2.2 (2) (for use with TRX-4 Long Arm Lift Kit)

Transmission Components

8283 Cable, T-lock (front)
8284 Cable, T-lock (rear)
8289 Drive hub, 2-speed/ shift dog/ shift fork/ 2-speed linkage
8293X Gear set, transmission, metal (includes 18T, 30T input gears, 36T output gear, 2x9.8 pins (5))
8291 Gearbox housing (includes main housing, front housing, & cover)
8285 Gears, transfer case (3)
5041 Grease, premium high performance (20cc)
8292 Input shaft/ output shaft (transmission)
8290X Motor mount plate, 6061-T6 aluminum (blue-anodized)
8290A Motor mount plate, 6061-T6 aluminum (charcoal gray-anodized)
8290G Motor mount plate, 6061-T6 aluminum (green-anodized)
8290R Motor mount plate, 6061-T6 aluminum (red-anodized)
8295 Output drive, transmission or differential (pin retainer (1)/ drive cup (1)/ drive ball (1)/ drive pin (1)/ 3x11 screw pin (1)/ cross pin (black) (1) 3x6 BCS with threadlock (1))
8294 Output gear, high range, 24T (metal)
8286 Output shafts (transfer case), front & rear
8290 Plate, motor/ upper spur gear cover
8249 Slipper eliminator plate
8296 Transmission gears, single speed, metal
8196 Two speed conversion kit

Traxxas Tools

3433X Body reamer (aluminum handle)
3433 Body reamer (plastic handle)
3436 Cap, body reamer
3432 Scissors, curved tip
3431 Scissors, straight tip
8712 Speed Bit Essentials Set, hex and nut driver, 7-piece, includes premium handle (medium), travel pouch, hex drivers (straight: 1.5mm, 2.0mm, 2.5mm) and nut drivers (5.0mm, 5.5mm, 7.0mm, and 8.0mm), 1/4" drive
8721 Speed bit handle, medium (one piece)
8720 Speed bit handle, premium, large (rubber overmold)
8722 Speed bit handle, premium, medium (rubber overmold)
8710 Speed Bit Master Set, hex and nut driver, 13-piece, includes premium handle (medium), travel pouch, hex drivers (straight: 1.5mm, 2.0mm, 2.5mm, 3.0mm), (ball-end: 2.0mm, 2.5mm, 3.0mm), and nut drivers (4.00mm, 4.50mm, 5.00mm, 5.50mm, 7.00mm, 8.00mm),
8711 Speed Bit Master Set, hex driver, 7-piece straight and ball end, includes premium handle (medium), travel pouch, hex drivers (straight: 1.5mm, 2.0mm, 2.5mm, 3.0mm) (ball end: 2.0mm, 2.5mm, 3.0mm), 1/4" drive
8719 Speed Bit Master Set, nut driver, 6-piece, includes premium handle (medium), travel pouch, and nut drivers (4.0mm, 4.5mm, 5.0mm, 5.5mm, 7.0mm, 8.0mm), 1/4" drive
8716 Speed Bit Set, hex driver, 2-piece ball-end (2.0mm, 2.5mm), 1/4" drive
8716X Speed Bit Set, hex driver, 3-piece ball-end (2.0mm, 2.5mm, 3.0mm), 1/4" drive
8715 Speed Bit Set, hex driver, 3-piece straight (1.5mm, 2.0mm, 2.5mm), 1/4" drive
8715X Speed Bit Set, hex driver, 4-piece straight (1.5mm, 2.0mm, 2.5mm, 3.0mm), 1/4" drive
3415 Tool set with pouch (includes 1.5mm, 2.0mm, 2.5mm, 3.0mm, 3.5mm, 4mm drivers/ 4mm, 5mm, 5.5mm, 7mm and 8mm nut drivers/ 2mm, 4mm, and 5mm slotted screwdrivers/ #00 Phillips, #0 Phillips, and #1 Phillips screwdrivers/ 4mm and 8mm wrench/ driver handle

TRX-4® Traxx™

8889 Bearing retainers, inner (2), outer (2)
8890 Drive wheel (1)
8885 Shock mounts (frame, left (2), frame, right (2))/ portal mounts (1 each, front (left & right), rear (left & right))
8888 Spring (4)
8887 Stub axle (1)
8886 Stub axle nut (4)
8891 Tension wheels (6)/ road wheels (4)
8881 Traxx™, front, left (assembled) (requires #8886 stub axle, #7061 GTR shock, & #8878 or #8895 rubber track)
8882 Traxx™, front, right (assembled) (requires #8886 stub axle, #7061 GTR shock, & #8878 or #8895 rubber track)
8883 Traxx™, rear, left (assembled) (requires #8886 stub axle, #7061 GTR shock, & #8879 or #8896 rubber track)
8884 Traxx™, rear, right (assembled) (requires #8886 stub axle, #7061 GTR shock, & #8879 or #8896 rubber track)
8880 Traxx™, TRX-4® (4) (complete set, front & rear)
8895 Treads, All-Terrain, TRX-4® Traxx™ (front, left or right) (rubber) (1)
8896 Treads, All-Terrain, TRX-4® Traxx™ (rear, left or right) (rubber) (1)

If you have questions or need technical assistance, call Traxxas at:

1-888-TRAXXAS

(1-888-872-9927) (U.S. residents only)

For orders, calls outside the U.S., and other information, call 972-549-3000, or fax to 972-549-3011 e-mail Traxxas at support@Traxxas.com

TRAXXAS.COM

REV. 201020 0905

Questions? **Call toll-free, 1-888-TRAXXAS**

TRX-4

CHASSIS KIT

MODEL 82016-4

4WD ELECTRIC CRAWLER



TQi 4-CHANNEL 2.4GHz TRANSMITTER

TITAN 21T 550 MOTOR AND XL-5 HV ELECTRONIC SPEED CONTROL

GTS ALUMINUM SHOCKS

TRX-4 TECHNOLOGY AND INNOVATION-AVAILABLE AS A KIT!

The Traxxas TRX-4 Scale and Trail™ Crawler set the standard for off-road versatility with its radical design and rugged durability. The new TRX-4 chassis kit combines the same innovative features as the RTR vehicle with the fun and excitement of building your own kit. Build your own portal axles, high/low range transmission, and remotely locking differentials. All the parts are organized neatly in labeled bags with waterproof electronics and pre-assembled shocks and suspension links. A fully illustrated color manual makes the kit as much fun to construct as it is to take off-road.

TRX-4 Front Assembly

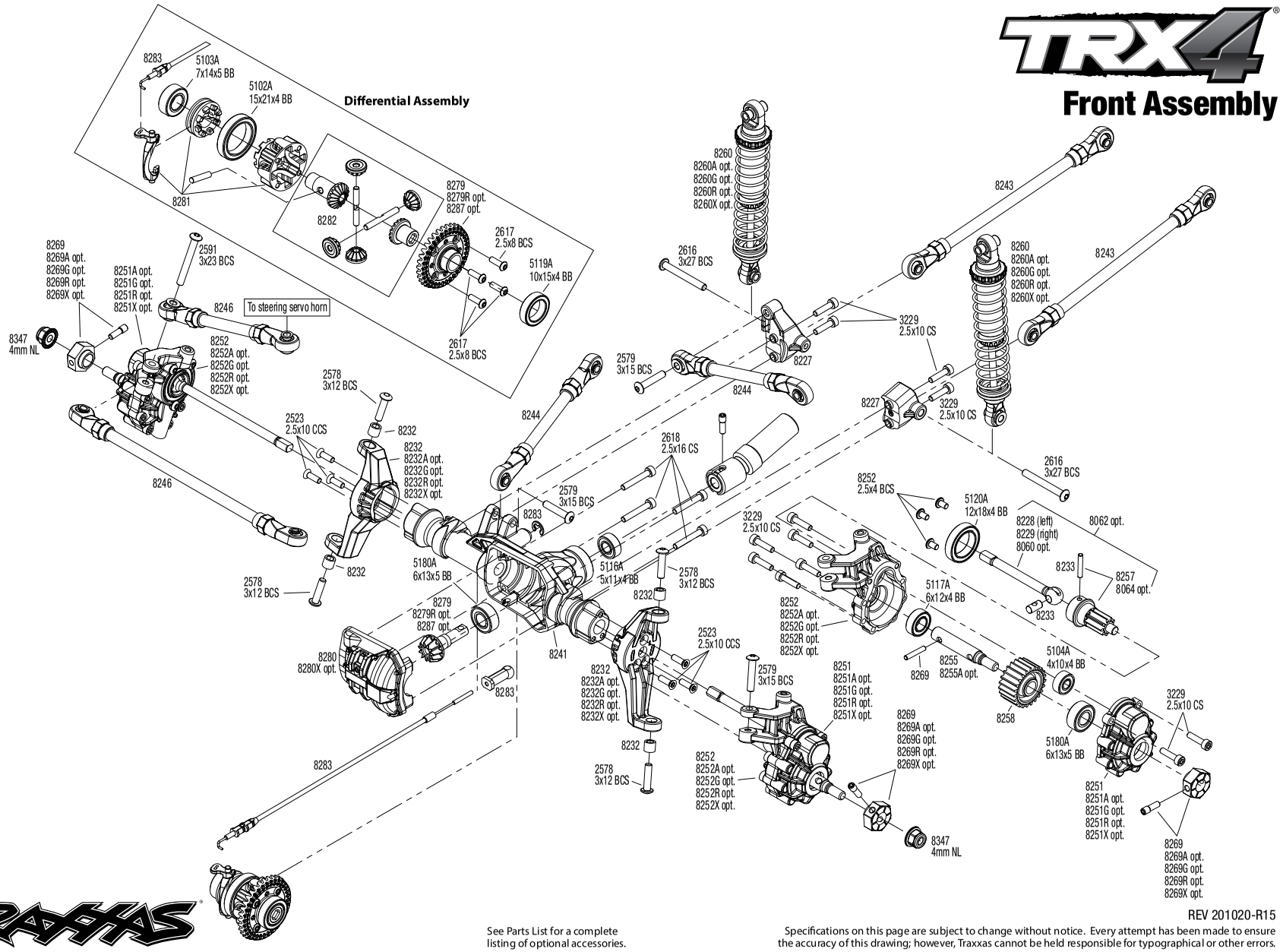

REV 201020-R15

See Parts List for a complete listing of optional accessories.

Specifications on this page are subject to change without notice. Every attempt has been made to ensure the accuracy of this drawing; however, Traxxas cannot be held responsible for typographical or other errors.

TRX-4 CHASSIS KIT (82016-4)

Specifications on this page are subject to change without notice. Every attempt has been made to ensure the accuracy of this drawing; however, Traxxas cannot be held responsible for typographical or other errors.

REV 201020-R15

See Parts List for a complete listing of optional accessories.

TRAXXAS

TRX4

Rear Assembly

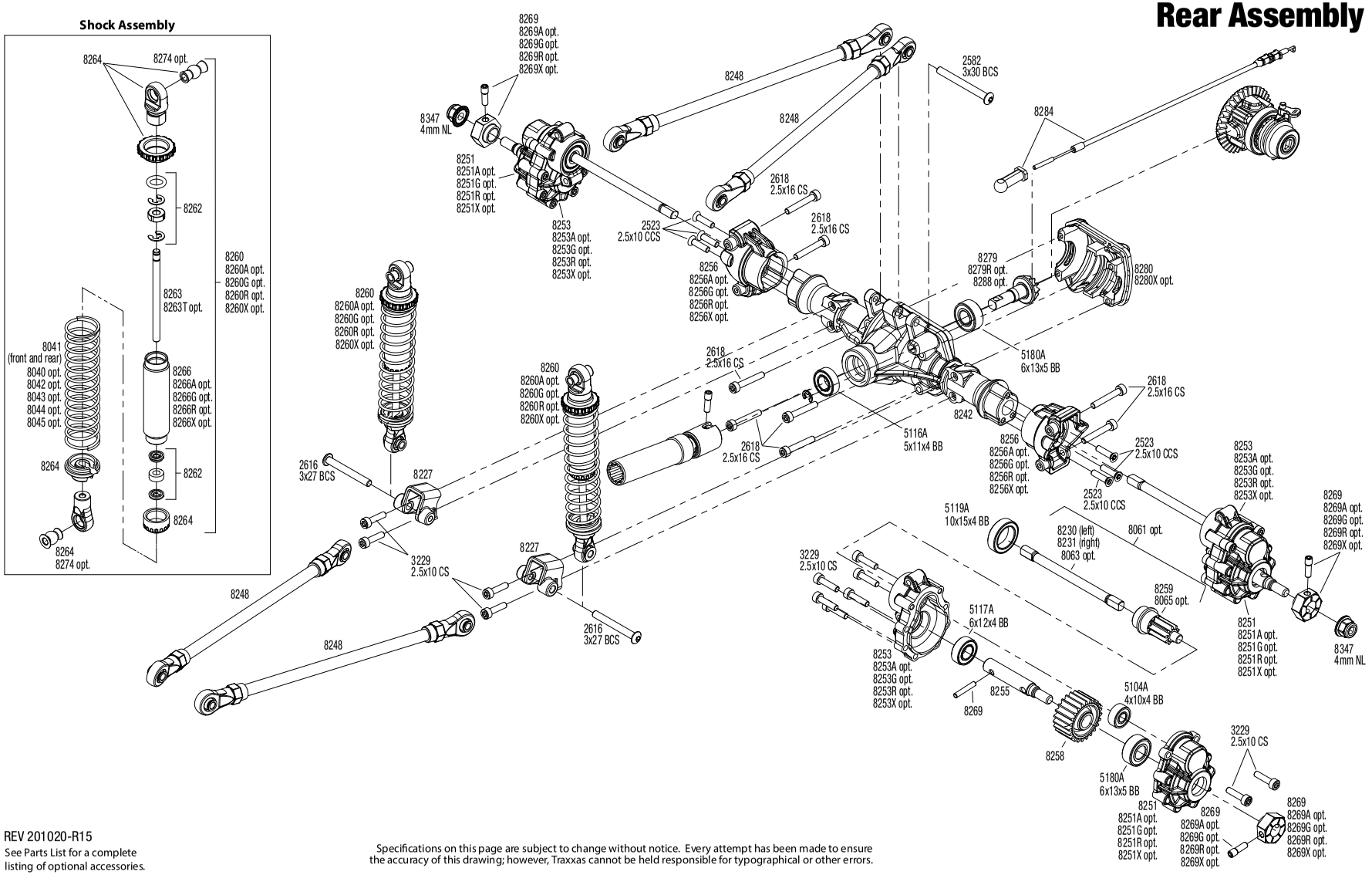

REV 201020-R15

See Parts List for a complete listing of optional accessories.

Specifications on this page are subject to change without notice. Every attempt has been made to ensure the accuracy of this drawing; however, Traxxas cannot be held responsible for typographical or other errors.

Transmission Assembly

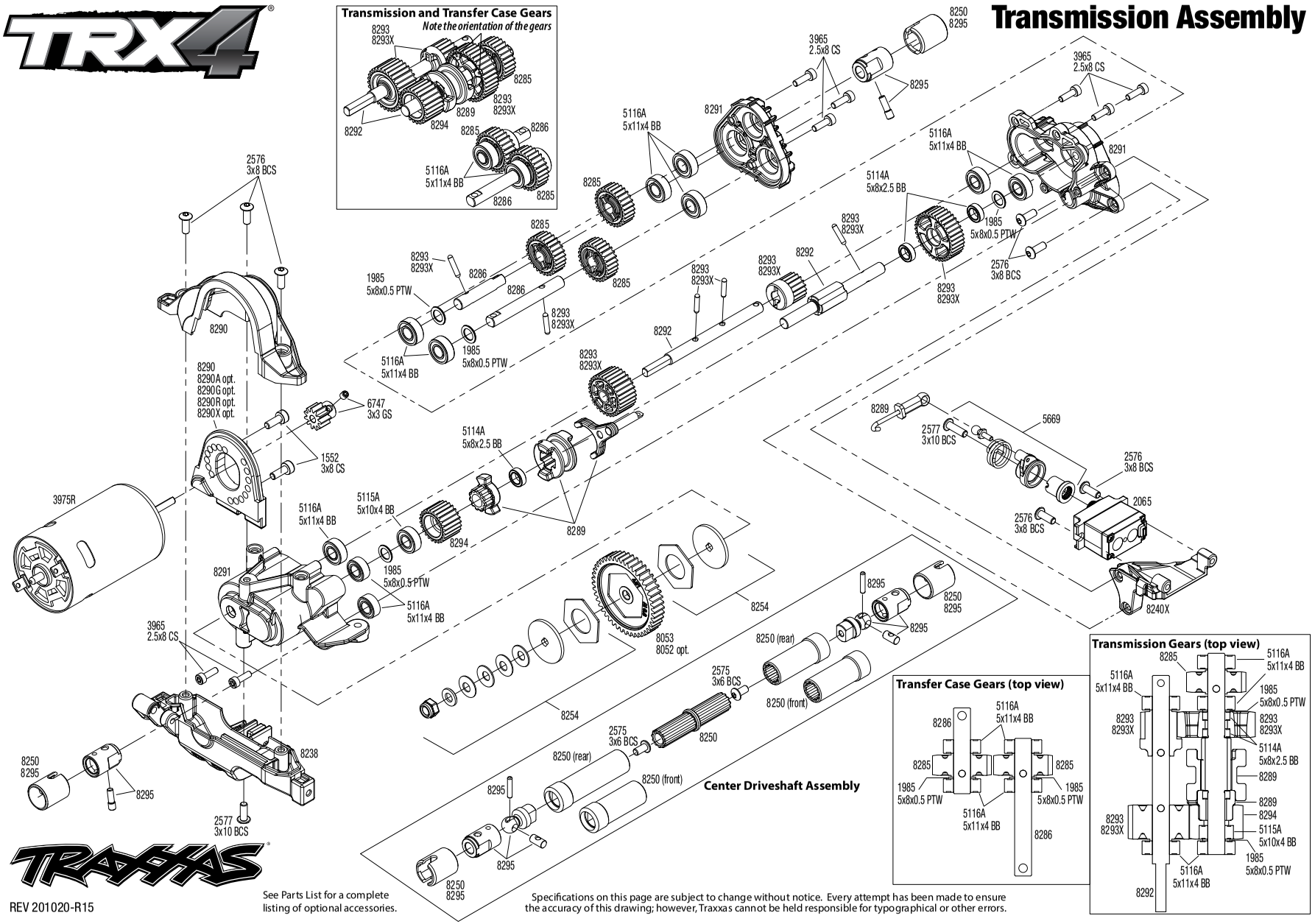

See Parts List for a complete listing of optional accessories.

Specifications on this page are subject to change without notice. Every attempt has been made to ensure the accuracy of this drawing; however, Traxxas cannot be held responsible for typographical or other errors.

Link Dimensions

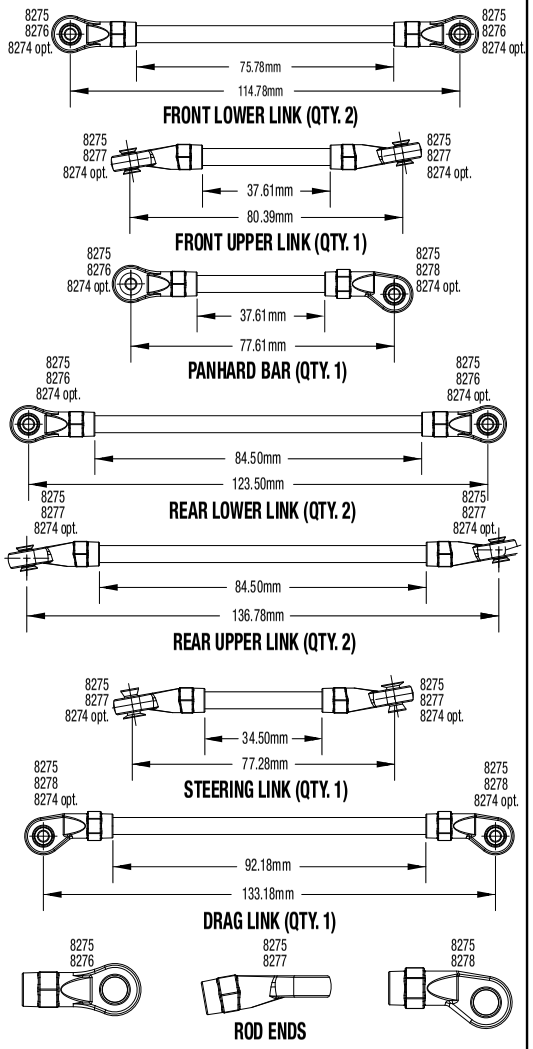

For standard hollow ball replacement, use part #5349.

Modular Assembly

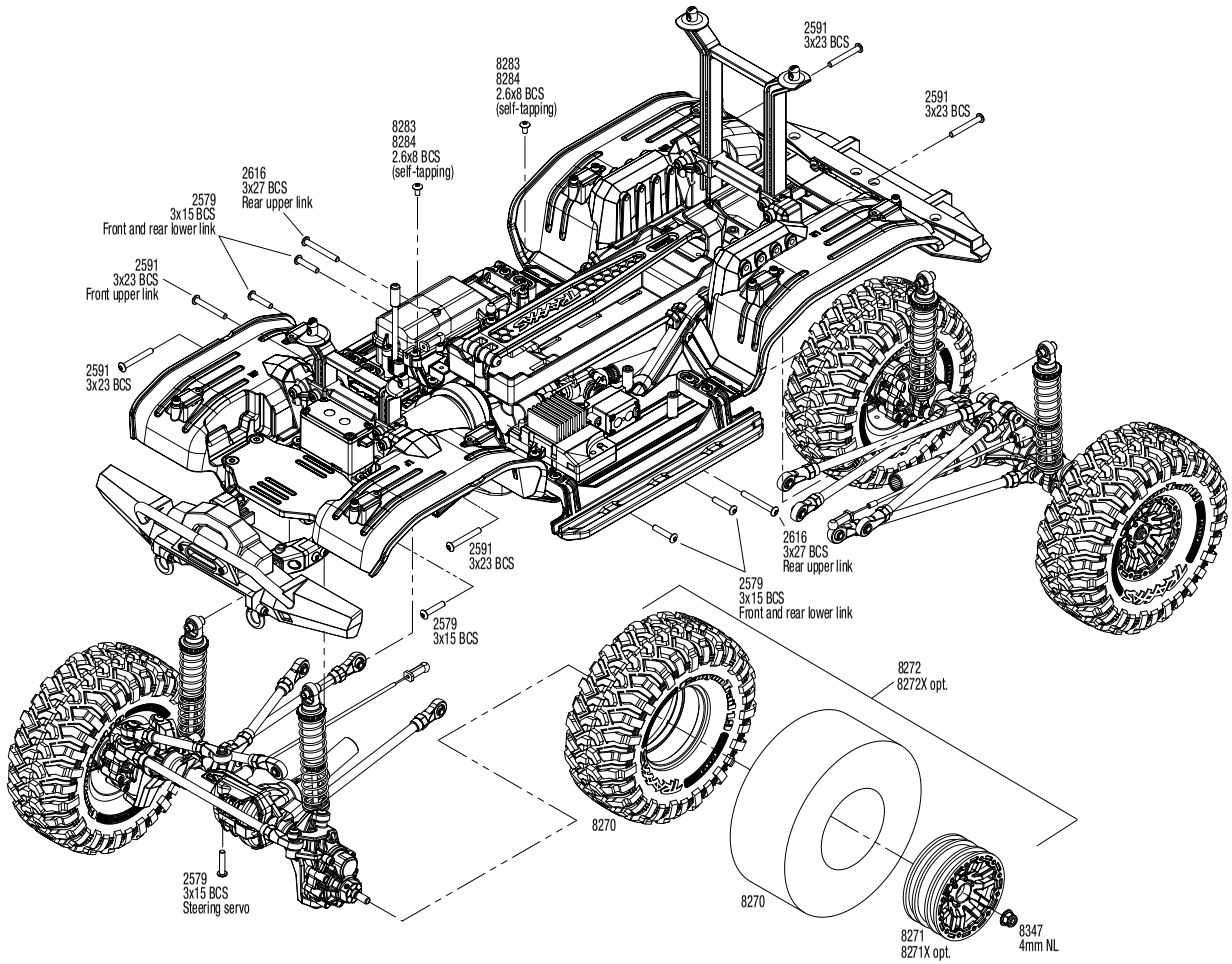

See Parts List for a complete listing of optional accessories.

REV 201020-R15

Specifications on this page are subject to change without notice. Every attempt has been made to ensure the accuracy of this drawing; however, Traxxas cannot be held responsible for typographical or other errors.

TRX-4 CHASSIS KIT (82016-4)

PARTS SHOWN IN BOLD ARE OPTIONAL ACCESSORIES.

Part categories and individual part listings are arranged alphabetically.

Axle Components

8241	Axle housing, front
8242	Axle housing, intermediate (TRX-6™) or rear (TRX-4®)
8227	Axle mount set (complete) (front & rear) (for suspension links)
8228	Axle shaft, front (left)/ drive pin/ cross pin
8229	Axle shaft, front (right)/ drive pin/ cross pin
8060	**Axle shaft, front, heavy duty (left & right) (requires #8064 front portal drive input gear)**
8062	**Axle shaft, front, heavy duty (left & right)/ portal drive input gear (machined) (2) (assembled)**
8230	Axle shaft, rear (left)
8231	Axle shaft, rear (right)
8061	**Axle shaft, rear, heavy duty (left & right)/ portal drive input gear, rear (machined)**
8063	**Axle, rear, heavy duty (left & right) (requires #8065 rear portal drive input gear)**
8233	Cross pin (2)/ drive pin (2) (to rebuild front axle shafts)
8256	Portal drive axle mount, rear (left & right)
8256X	**Portal drive axle mount, rear, 6061-T6 aluminum (blue-anodized) (left and right)/ 2.5x16 CS (4)**
8256A	**Portal drive axle mount, rear, 6061-T6 aluminum (charcoal gray-anodized) (left and right)/ 2.5x16 CS (4)**
8256G	**Portal drive axle mount, rear, 6061-T6 aluminum (green-anodized) (left and right)/ 2.5x16 CS (4)**
8256R	**Portal drive axle mount, rear, 6061-T6 aluminum (red-anodized) (left and right)/ 2.5x16 CS (4)**
8252	Portal drive housing, inner, front (left & right)/ 2.5x4 BCS (6)
8253	Portal drive housing, inner, rear (left or right) (2)
8251	Portal drive housing, outer (front or rear) (2)
8064	**Portal drive input gear, front (machined) (left or right) (requires #8060 front axle shaft)**
8257	Portal drive input gear, front/ drive pin/ cross pin
8259	Portal drive input gear, rear
8065	**Portal drive input gear, rear (machined) (left or right) (requires #8063 rear axle)**
8258	Portal drive output gear, front or rear
8252X	**Portal housings, inner (front), 6061-T6 aluminum (blue-anodized) (2)/ 3x12 BCS (2)**
8252A	**Portal housings, inner (front), 6061-T6 aluminum (charcoal gray-anodized) (2)/ 3x12 BCS (2)**
8252G	**Portal housings, inner (front), 6061-T6 aluminum (green-anodized) (2)/ 3x12 BCS (2)**
8252R	**Portal housings, inner (front), 6061-T6 aluminum (red-anodized) (2)/ 3x12 BCS (2)**
8253X	**Portal housings, inner (rear), 6061-T6 aluminum (blue-anodized) (2)/ 2.5x10 CS (2)**
8253A	**Portal housings, inner (rear), 6061-T6 aluminum (charcoal gray-anodized) (2)/ 2.5x10 CS (2)**
8253G	**Portal housings, inner (rear), 6061-T6 aluminum (green-anodized) (2)/ 2.5x10 CS (2)**
8253R	**Portal housings, inner (rear), 6061-T6 aluminum (red-anodized) (2)/ 2.5x10 CS (2)**
8251X	**Portal housings, outer, 6061-T6 aluminum (blue-anodized) (2)/ 2.5x10 CS (12)**
8251A	**Portal housings, outer, 6061-T6 aluminum (charcoal gray-anodized) (2)/ 2.5x10 CS (12)**
8251G	**Portal housings, outer, 6061-T6 aluminum (green-anodized) (2)/ 2.5x10 CS (12)**
8251R	**Portal housings, outer, 6061-T6 aluminum (red-anodized) (2)/ 2.5x10 CS (12)**
8255	Stub axle (portal drive) (2)
8255A	**Stub axle, extended (portal drive) (2)**
8267	**Weight, portal housing, brass (34 grams) (2)/ 2.5x8 CS (6) (requires #8251X, 8251R, 8251A, or 8251G outer portal housing)**

Bearings & Bushings

5119A	Ball bearings, black rubber sealed (10x15x4mm) (2)
5120A	Ball bearings, black rubber sealed (12x18x4mm) (2)
5104A	Ball bearings, black rubber sealed (4x10x4mm) (2)
5115A	Ball bearings, black rubber sealed (5x10x4mm) (2)
5116A	Ball bearings, black rubber sealed (5x11x4mm) (2)
5114A	Ball bearings, black rubber sealed (5x8x2.5mm) (2)
5117A	Ball bearings, black rubber sealed (6x12x4mm) (2)
5180A	Ball bearings, black rubber sealed (6x13x5mm) (2)
5103A	Ball bearings, black rubber sealed (7x14x5mm) (2)

Body (1969 Chevrolet Blazer)

9112	**Body, Chevrolet Blazer (1969 - 1970) (clear, requires painting) (includes grille, side mirrors, door handles, windshield wipers, decals, window masks)**
9112X	**Body, Chevrolet Blazer (1969), complete (black) (includes grill, side mirrors, door handles, windshield wipers, front & rear bumpers, decals)**
9125	**Bumper pads/ bumper guards (chrome)/ 2.5x10 BCS (4)/ 2.7mm drill bit (fits #9126 or #9127 front bumpers)**
9127	**Bumper, front (chrome)/ bumper mount/ 3x10 BCS (2)**
9124	**Bumper, rear (chrome)/ bumper mount/ 3x10 BCS (2)**
9113	**Decal sheets, Chevrolet Blazer (1969 -1972)**
9115	**Door handles, left, right, and rear/ retainers (3)/ windshield wipers, left & right/ retainer (1)/ fuel cap/ fuel flange/ fuel cap mount/ 1.6x5 BCS (self-tapping) (7)/ 2.6x8 BCS (1)**
9123	**Grille, Chevrolet Blazer (1969 - 1970)/ grille retainers (5)/ headlight housing (2)/ headlight lens (2)/ turn signal lens (2)/ hood emblem/ hood emblem mount/ 2.6x8 BCS (5)/ 2.5x6 BCS (4)/ 1.6x5 BCS (self-tapping) (2) (fits #9112 body)**
9116	**Marker light housing (4)/ marker light mount (4)/ marker light lens (red (2), amber (2))/ reverse lens (left & right)/ 1.6x5 BCS (self-tapping) (8)**
9121	**Mirrors, side, chrome (left & right)/ o-rings (4)/ body clips (4) (fits #9112 body)**
9122	**Tail light housing, black (2)/ lens (2)/ retainers (left & right)/ 2.6x8 BCS (self-tapping) (4)**

Body (1972 Chevrolet Blazer)

9111	**Body, Chevrolet Blazer (1972) (clear, requires painting) (includes grille, side mirrors, side trim, door handles, windshield wipers, decals, window masks)**
9111X	**Body, Chevrolet Blazer (1972), complete (blue) (includes grille, side mirrors, door handles, windshield wipers, front & rear bumpers, decals)**
9125	**Bumper pads/ bumper guards (chrome)/ 2.5x10 BCS (4)/ 2.7mm drill bit (fits #9126 or #9127 front bumpers)**
9126	**Bumper, front (chrome)/ bumper mount/ lens (left and right) (2)/ lens mount (left and right) (2)/ 3x10 BCS (2)/ 2.6x6 BCS (4)**
9124	**Bumper, rear (chrome)/ bumper mount/ 3x10 BCS (2)**
9113	**Decal sheets, Chevrolet Blazer (1969 -1972)**
9115	**Door handles, left, right, and rear/ retainers (3)/ windshield wipers, left & right/ retainer (1)/ fuel cap/ fuel flange/ fuel cap mount/ 1.6x5 BCS (self-tapping) (7)/ 2.6x8 BCS (1)**
9120	**Grille, Chevrolet Blazer (1972)/ grille retainers (5)/ headlight housing (2)/ lens (2)/ 2.6x8 BCS (5)/ 2.5x6 BCS (4) (fits #9111 body)**
9116	**Marker light housing (4)/ marker light mount (4)/ marker light lens (red (2), amber (2))/ reverse lens (left & right)/ 1.6x5 BCS (self-tapping) (8)**
9118	**Mirrors, side, chrome (left & right)/ o-rings (4)/ body clips (4) (fits #9111 body)**
9117	**Side trim, Chevrolet Blazer (1972), left & right/ rear trim, upper & lower/ retainers, left, right & rear/ 2.6x8 BCS (23)/ 1.6x5 BCS (self-tapping) (5) (fits #9111 body)**
9119	**Tail light housing, chrome (2)/ lens (2)/ retainers (left & right)/ 2.6x8 BCS (self-tapping) (4)**

Body (1979 Chevrolet Blazer)

8130	**Body, Chevrolet Blazer (1979) (clear, requires painting)/ window masks**
8130G	**Body, Chevrolet Blazer (1979) (orange) (requires grille, side mirrors, door handles, windshield wipers, decals)**
8130A	**Body, Chevrolet Blazer (1979) (red) (requires grille, side mirrors, door handles, windshield wipers, decals)**
8130X	**Body, Chevrolet Blazer (1979), complete (orange) (includes grille, side mirrors, door handles, windshield wipers, front & rear bumpers, decals)**
8130R	**Body, Chevrolet Blazer (1979), complete (red) (includes grille, side mirrors, door handles, windshield wipers, front & rear bumpers, decals)**
8131	**Decal sheet, Chevrolet Blazer (1979)**
8132	**Door handles, left, right & rear tailgate/ windshield wipers, left & right/ retainers (2)/ 1.6x5 BCS (self-tapping) (7) (fits #8130 body)**
8134	**Grille, Chevrolet Blazer (1979)/ grille retainers (4)/ headlight housing (2)/ lens (2)/ 2.6x8 BCS (4)/ 2.5x6 BCS (2) (fits #8130 body)**
8133X	**Mirrors, side (folding) (fits #8130 body)**
8133	**Mirrors, side, chrome (left & right)/ o-rings (4)/ body clips (4) (fits #8130 body)**

8135	**Tail lights, left & right (assembled)/ tail light retainers, left & right/ side marker lights (assembled) (2)/ side marker retainers (2)/ mounting tape (2)/ 1.6x5 BCS (self-tapping) (4)/ 2.6x8 BCS (2) (fits #8130 body)**

Body (1979 Ford Bronco)

8010	**Body, Ford Bronco (1979) (clear, requires painting)/ decals/ window masks/ tailgate panel insert/ adhesive foam tape (2)**
8010X	**Body, Ford Bronco (1979), complete (black) (includes front and rear bumpers, push bar, rear body mount, grille, side mirrors, door handles, windshield wipers, spare tire mount, red and sunset decals) (requires #8072 inner fenders)**
8078R	**Decal sheet, Bronco, red (fits #8010 body)**
8078	**Decal sheet, Bronco, sunset (fits #8010 body)**
8075	**Door handles, left & right/ windshield wipers, left & right/ retainers (3)/ 1.6x5 BCS (self-tapping) (4) (fits #8010 body)**
8070	**Grille, Ford Bronco/ grille retainers (6)/ headlight housing (2)/ lens (2)/ 2.6x8 BCS (6)/ 2.5x6 BCS (2) (fits #8010 body)**
8073	**Mirrors, side, black (left & right)/ retainers (2)/ body clips (4) (fits #8010 body)**
8073X	**Mirrors, side, chrome (left & right)/ retainers (2)/ body clips (4) (fits #8010 body)**
8076	**Side trim, left & right (chrome)/ retainers/ LED lens/ 2.6x8 BCS (24) (fits #8010 body)**
8074	**Spare tire mount/ mounting bracket/ spare tire cover/ mounting hardware**
8077	**Tailgate panel insert (clear, requires painting)/ adhesive foam tape (2) (fits #8010 body)**
8071	**Tailgate panel/ tail light lens (2) (left & right) (fits #8010 body)**

Body (Land Rover Defender)

8011	**Body, Land Rover® Defender® (clear, trimmed, requires painting)/ window masks/ decal sheet**
8011A	**Body, Land Rover® Defender®, adventure orange (complete with ExoCage, inner fenders, fuel canisters, and jack)**
8011X	**Body, Land Rover® Defender®, graphite silver (painted)/ decals**
8011R	**Body, Land Rover® Defender®, red (painted)/ decals**
8012	**Decals, Land Rover® Defender®**
8016	**ExoCage (complete with assembly hardware; #8015 roof basket sold separately) (fits #8011 body)**
8019	**Fender brace, inner, front & rear**
8017	**Fender flares, front & rear (2 each) (fits #8011 or #8211 body)**
8018	**Fenders, inner, front & rear (2 each)/ rock light covers (8)**
8013	**Grille, Land Rover® Defender®/ grille mount (3)/ headlight housing (2)/ lens (2)/ headlight mount (2) (fits #8011 body)**
8020	**Mirrors, side (left & right)/ snorkel/ mounting hardware (fits #8011 body)**
8015	**Roof basket (requires #8016 ExoCage) (fits #8011 body)**
8021	**Spare tire mount/ mounting bracket/ screw pins (2)**
8014	**Tail light housing (2)/ lens (2)/ decals (left & right) (fits #8011 body)**

Body (Mercedes-Benz® G 500®)

8811	**Body, Mercedes-Benz® G 500® 4x4² (clear, requires painting)/ decals/ window masks (includes rear body post, grille, side mirrors, door handles, & windshield wipers)**
8812	**Decals, Mercedes-Benz® G 500® 4x4²**
8813X	**Grille, Mercedes-Benz® G 500® 4x4²/ grille mount/ grille insert/ headlight lens (2)/ headlight reflector (2)/ reflector lens (2)/ bumperette front (2)/ bumperette mount (2)/ turn signal housing (2)/ turn signal housing retainer (2)/ turn signal len**
8817	**Mirrors, side, black (left & right)/ o-rings (4)/ windshield wipers, left, right, & rear/ wiper retainers (2)/ body clips (4)/ 1.6x5 BCS (self-tapping) (3)**
8822	**Roof visor/ visor retainer/ visor lens (2)/ 2.6x6 BCS (3)/ 3x4 GS (4)**
8816X	**Side marker light housing (2)/ mount (2)/ lens (2)/ 1.6x7 BCS (self-tapping) (2)**
8814X	**Tail light lens (2)/ tail light housing (2)/ tail light housing mount (2)/ reverse lens (2)/ 1.6x5 BCS (4) (left & right)**

Body (Tactical Unit)

8211X	**Body, Tactical Unit, night camo (painted)/ decals**
8019	**Fender brace, inner, front & rear**
8017	**Fender flares, front & rear (2 each) (fits #8011 or #8211 body)**
8018	**Fenders, inner, front & rear (2 each)/ rock light covers (8)**
8020	**Mirrors, side (left & right)/ snorkel/ mounting hardware (fits #8011 body)**
8021	**Spare tire mount/ mounting bracket/ screw pins (2)**

Body (TRX-4® Sport)

8112	**Body with camper, TRX-4® Sport (clear, trimmed, requires painting)/ window masks/ decal sheet**
8111R	**Body, TRX-4® Sport (clear, trimmed, die-cut for LED light kit, requires painting)/ window masks/ decal sheet**
8111	**Body, TRX-4® Sport (clear, trimmed, requires painting)/ window masks/ decal sheet**
8113	**Decal sheet, TRX-4® Sport**
8120X	**Expedition rack, complete (includes traction boards, shovel, axe, jack, fire extinguisher, fuel cans, & mounting hardware) (fits #8111 or #8111R body)**
8120	**Expedition rack/ mounting hardware (fits #8111 or #8111R body)**
8116	**Grille/ grille retainers (2)/ grille mount/ lens (2)/ 2.5x8 BCS (6) (fits #8111 or #8112 body)**
8119	**Mirrors, side (left & right)/ snorkel/ mounting hardware (fits #8111 or #8112 body)**
8122	**Shovel/ axe/ accessory mount/ mounting hardware**
8118	**Spare tire mount/ mounting hardware**
8117	**Tailgate panel/ tailgate retainers (2)/ tailgate mount/ tail light lens (2) (left & right)/ 2.5x8 BCS (4) (fits #8111 or #8112 body)**
8121X	**Traction boards, blue/ mounting hardware**
8121G	**Traction boards, green/ mounting hardware**
8121A	**Traction boards, yellow/ mounting hardware**
8121	**Traction boards/ mounting hardware**

Body Accessories

1926	**Antenna caps, vinyl (2)/ antenna spool**
1726	Antenna, tube (1)/ vinyl antenna cap (1)/ wire retainer (1)
1834	**Body clips (12) (standard size)**
1834A	**Body clips, black (12) (standard size)**
3934	**Body clips, heavy duty (12)**
3934A	**Body clips, heavy duty (black) (12)**
8215	Body mounts & posts, front & rear (complete set)
4915	**Body washers, foam adhesive (10)**
2514	**Decal sheet, racing sponsors**
8081	**Fender extensions (4)/ 3x8 flat-head screws (24) (requires #8080 narrow inner fenders)**
8080	**Fenders, inner (narrow), front & rear (2 each)/ rock light covers (8)/ battery plate/ 3x8 flat-head screws (4)**
8072	**Fenders, inner, front & rear (2 each)/ rock light covers (8)/ battery plate/ 3x8 flat-head screws (4)**
9950	**Official Team Traxxas® racing decal set (flag logo/ 6-color)**

Bumpers & Skidplates

8234	Bumper D-Rings, grey (front or rear)/ 2x12 CS (4)
8234R	**Bumper D-rings, red (front or rear)/ 2.0x12 CS (4)**
8067	**Bumper mounts, front & rear**
8237	Bumper mounts, front & rear/ screw pins (4)
8069	**Bumper, front (chrome)/ bumper mount/ 3x10 BCS (2)**
8235	Bumper, front/ winch
8236	Bumper, rear
8068	**Bumper, rear (chrome)/ bumper mount/ 3x10 BCS (2)**
8066	**Push bar, bumper (chrome) (fits #8069 bumper)**
8238	Skidplate/ lower gear cover

Chassis & Attachments

8215	Body mounts & posts, front & rear (complete set)
8224	Box, receiver (sealed)/ wire cover/ foam pads/ silicone grease/ 3x8 BCS (5)/ 2.5x8 CS (2)
8058	**Chassis conversion kit, TRX-4® (long to short wheelbase) (includes rear upper & lower suspension links, front & rear inner fenders, short female half shaft, battery tray, 3x8mm FCS (4))**
8057	**Chassis conversion kit, TRX-4® (short to long wheelbase) (includes rear upper & lower suspension links, front & rear shock towers, long female half shaft)**
8220	Chassis rails, 448mm (steel) (left & right)
8072	**Fenders, inner, front & rear (2 each)/ rock light covers (8)/ battery plate/ 3x8 flat-head screws (4)**
8218	Floor pans, left & right
8224X	**Receiver box cover (for use only with #8224 receiver box & #2260 BEC)/ foam pads/ seals/ silicone grease**
8219	Rock sliders, left & right
8225	**Seal kit, receiver box (includes o-ring, seals, and silicone grease)**
8240X	Servo mount, 2-speed/ servo mount, T-Lock/ wire clips
8239	Servo mount, steering/ chassis crossmember
8216	Shock towers, front & rear (left & right)
8226	Tray, battery

Differential Components

8281	Carrier, differential/ differential slider/ T-Lock fork
8280A	**Differential cover, front or rear (black)**
8280X	**Differential cover, front or rear (chrome-plated)**
8280	Differential cover, front or rear (grey)
8280R	**Differential cover, front or rear (red)**
8282	Gear set, differential (output gears (2), spider gears (4), spider gear shaft (2))

TRX-4 CHASSIS KIT (82016-4)

8295	Output drive, transmission or differential (pin retainer (1)/ drive cup (1)/ drive ball (1)/ drive pin (1)/ 3x11 screw pin (1)/ cross pin (black) (1) 3x6 BCS with threadlock (1))
8279	Ring gear, differential/ pinion gear, differential
8279R	**Ring gear, differential/ pinion gear, differential (machined)**
8287	**Ring gear, differential/ pinion gear, differential (overdrive, machined)**
8288	**Ring gear, differential/ pinion gear, differential (underdrive, machined)**
8297	**Spool/ differential housing plug/ e-clip**

Driveline Components

8250	Half shafts, center (internal splined, front (2) & internal splined, rear (2)/ external splined (2)/ pin retainer (4)) (plastic parts only)
8255	Stub axle (portal drive) (2)
8255A	**Stub axle, extended (portal drive) (2)**
8269	Wheel hubs, 12mm hex (2)/ stub axle pins (2) (steel)
8269X	**Wheel hubs, 12mm hex, 6061-T6 aluminum (blue-anodized) (4)/ screw pin (4)**
8269A	**Wheel hubs, 12mm hex, 6061-T6 aluminum (charcoal gray-anodized) (4)/ screw pin (4)**
8269G	**Wheel hubs, 12mm hex, 6061-T6 aluminum (green-anodized) (4)/ screw pin (4)**
8269R	**Wheel hubs, 12mm hex, 6061-T6 aluminum (red-anodized) (4)/ screw pin (4)**

Hardware

1552	Backplate screws (3x8mm cap-head machine) (6)/washers (6)/ wrench
1834	Body clips (12) (standard size)
1834A	**Body clips, black (12) (standard size)**
3934	**Body clips, heavy duty (12)**
3934A	**Body clips, heavy duty (black) (12)**
8167X	**Hardware kit, stainless steel, beadlock rings (contains stainless steel hardware for 4 wheels)**
8298	**Hardware kit, stainless steel, TRX-4® (contains all stainless steel hardware used on TRX-4)**
8151	**Hardware kit, stainless steel, TRX-4® High Lift Kit (contains all stainless steel hardware used on TRX-4® Long Arm Lift Kit)**
5476X	**Hex wrenches; 1.5mm, 2mm, 2.5mm, 3mm, 2.5mm ball**
3647	**Nuts, 4mm flanged nylon locking (steel, serrated) (8)**
8347	Nuts, 4mm flanged nylon locking, serrated (black) (10)
1747R	**Nuts, aluminum, flanged, serrated (4mm) (blue-anodized) (4)**
1747G	**Nuts, aluminum, flanged, serrated (4mm) (green-anodized) (4)**
1747P	**Nuts, aluminum, flanged, serrated (4mm) (pink-anodized) (4)**
1985	PTFE-coated washers, 5x8x0.5mm (20) (use with ball bearings)
8221	Screw pin, 3x10mm (6)
3229	Screws, 2.5x10mm cap-head machine (hex drive) (6)
2523	Screws, 2.5x10mm countersunk machine (hex drive) (6)
3236	Screws, 2.5x12mm cap-head machine (6)
2618	Screws, 2.5x16mm cap-head machine (6)
3215	Screws, 2.5x6mm cap-head machine (hex drive) (6)
2617	Screws, 2.5x8mm button-head machine (hex drive) (6)
3965	Screws, 2.5x8mm cap-head machine (6)
2524	Screws, 2.5x8mm countersunk machine (hex drive) (6)
8299	Screws, 2.6x12mm button-head, self-tapping (hex drive) (6)
8167	Screws, 2x10mm cap-head, self-tapping (hex drive) (10)
2564	Screws, 2x8mm cap-head machine (hex drive) (6)
2577	Screws, 3x10mm button-head machine (hex drive) (6)
4859	Screws, 3x10mm flat-head machine (hex drive) (4)
2578	Screws, 3x12mm button-head machine (hex drive) (6)
2579	Screws, 3x15mm button-head machine (hex drive) (6)
2591	Screws, 3x23mm button-head machine (hex drive) (6)
2581	Screws, 3x25mm button-head machine (hex drive) (6)
2616	Screws, 3x27mm button-head machine (hex drive) (6)
2582	Screws, 3x30mm button-head machine (hex drive) (6)
2575	Screws, 3x6mm button-head machine (hex drive) (6)
3932	Screws, 3x6mm flat-head machine (hex drive) (6)
2576	Screws, 3x8mm button-head machine (hex drive) (6)
3931	Screws, 3x8mm flat-head machine (hex drive) (6)
3933	Screws, 4x16mm button-head machine (hex drive) (6)

LED Light Accessories

8031	**3-in-1 wire harness, LED light kit**
8089	**4-in-2 wire harness, LED light kit**
8028	**LED lights, power supply (regulated, 3V, 0.5-amp)/ 3-in-1 wire harness**
8026X	**LED rock light kit, TRX-4®/TRX-6™ (requires #8028 power supply and #8018, #8072, or #8080 inner fenders)**

LED Lights (1969-1972 Chevrolet Blazer)

8090	**LED light set, complete with power supply (contains headlights, tail lights, side marker lights, & distribution block) (fits #9111 or 9112 body)**

LED Lights (1979 Chevrolet Blazer)

8039	**LED light set (contains headlights, tail lights, side marker lights, distribution block (fits #8130 body, requires #8028 power supply)**
8038	**LED light set, complete with power supply (contains headlights, tail lights, side marker lights, distribution block, and power supply) (fits #8130 body)**

LED Lights (1979 Ford Bronco)

8036	**LED light set (contains headlights, tail lights, side marker lights, & distribution block) (fits #8010 body, requires #8028 power supply)**
8035	**LED light set, complete with power supply (contains headlights, tail lights, side marker lights, & distribution block) (fits #8010 body)**
8037	**LED lights, high/low switch (for #8035 or #8036 LED light kits)**

LED Lights (Land Rover Defender)

8027	**LED headlight/tail light kit (fits #8011 body, requires #8028 power supply)**
8025	**LED light bar (Rigid®), TRX-4 (requires #8028 power supply)**
8029	**LED light bar kit (Rigid®)/power supply, TRX-4®**
8030	**LED light set, complete (contains rock light kit, LED light bar (Rigid®), LED headlight/tail light kit, power supply, & 3-in-1 wire harness) (fits #8011 body)**

LED Lights (Mercedes-Benz® G 500® 4x4²)

8899	**LED light set (contains headlights, tail lights, roof lights, and distribution block) (fits #8811 or #8825 body, requires #8028 power supply)**
8898	**LED light set, complete with power supply (contains headlights, tail lights, roof lights, & distribution block) (fits #8811 or #8825 body)**

LED Lights (TRX-4® Sport)

8086	**LED expedition rack scene light kit (fits #8111 body, requires #8028 power supply)**
8084	**LED headlight/tail light kit (fits #8111 or #8112 body, requires #8028 power supply)**
8088	**LED light bar, front bumper (fits #8124 front bumper, requires #8028 power supply)**
8087	**LED light bar, roof lights (fits #8111 body, requires #8028 power supply)**
8085	**LED light set, complete with power supply (contains headlights, tail lights, & distribution block) (fits #8111 or #8112 body)**

Long Arm Lift Kit

8162X	**Body, GTS shock, long (aluminum, blue-anodized) (1) (for use with #8140X TRX-4® Long Arm Lift Kit)**
8162R	**Body, GTS shock, long (aluminum, red-anodized) (1) (for use with #8140R TRX-4® Long Arm Lift Kit)**
8162	**Body, GTS shock, long (silver aluminum) (1) (for use with #8140 TRX-4® Long Arm Lift Kit)**
8148	**Cable, T-lock (extra long) (for use with TRX-4® Long Arm Lift Kit)**
8147	**Cable, T-lock (medium) (for use with TRX-4® Long Arm Lift Kit)**
8150	**Driveshaft extension kit, center (includes internal splined, x-long (2), internal splined, long (1) and internal splined, medium (1)) (for use with TRX-4® Long Arm Lift Kit)**
8140	**Long Arm Lift Kit, TRX-4®, complete**
8140X	**Long Arm Lift Kit, TRX-4®, complete (includes blue powder coated links, blue-anodized shocks)**
8140R	**Long Arm Lift Kit, TRX-4®, complete (includes red powder coated links, red-anodized shocks)**
8149	**Rod ends, extended (standard (4), angled (4))/ hollow balls (8) (for use with TRX-4® Long Arm Lift Kit)**
8141	**Servo mount, steering (for use with TRX-4® Long Arm Lift Kit)**
8161	**Shock shaft, 3x57mm (GTS) (2) (includes bump stops) (for use with TRX-4® Long Arm Lift Kit)**
8160X	**Shocks, GTS, aluminum (blue-anodized) (assembled without springs) (4) (for use with #8140X TRX-4® Long Arm Lift Kit)**
8160R	**Shocks, GTS, aluminum (red-anodized) (assembled without springs) (4) (for use with #8140R TRX-4® Long Arm Lift Kit)**
8160	**Shocks, GTS, silver aluminum (assembled without springs) (4) (for use with #8140 TRX-4® Long Arm Lift Kit)**
8153	**Springs, shock, long (natural finish) (GTS) (0.29 rate, white stripe) (for use with TRX-4® Long Arm Lift Kit)**
8154	**Springs, shock, long (natural finish) (GTS) (0.39 rate, orange stripe) (for use with TRX-4® Long Arm Lift Kit)**
8155	**Springs, shock, long (natural finish) (GTS) (0.47 rate) (included with TRX-4® Long Arm Lift Kit)**

8156 **Springs, shock, long (natural finish) (GTS) (0.54 rate, green stripe) (for use with TRX-4® Long Arm Lift Kit)**
8157 **Springs, shock, long (natural finish) (GTS) (0.62 rate, blue stripe) (for use with TRX-4® Long Arm Lift Kit)**
8146X **Steering link, 5x117mm (1)/ draglink, 5x60mm (1)/ panhard link, 5x63mm (blue powder coated steel) (assembled with hollow balls) (for use with #8140X TRX-4® Long Arm Lift Kit)**
8146R **Steering link, 5x117mm (1)/ draglink, 5x60mm (1)/ panhard link, 5x63mm (red powder coated steel) (assembled with hollow balls) (for use with #8140R TRX-4® Long Arm Lift Kit)**
8144X **Suspension link, front upper, 5x68mm (1) (blue powder coated steel) (assembled with hollow balls) (for use with #8140X TRX-4® Long Arm Lift Kit)**
8144R **Suspension link, front upper, 5x68mm (1) (red powder coated steel) (assembled with hollow balls) (for use with #8140R TRX-4® Long Arm Lift Kit)**
8144 **Suspension link, front upper, 5x68mm (1) (steel) (assembled with hollow balls) (for use with #8140 TRX-4® Long Arm Lift Kit)**
8143 **Suspension links, front lower (2) (5x104mm, steel) (assembled with hollow balls) (for use with #8140 TRX-4® Long Arm Lift Kit)**
8143X **Suspension links, front lower, blue (2) (5x104mm, powder coated steel) (assembled with hollow balls) (for use with #8140X TRX-4® Long Arm Lift Kit)**
8143R **Suspension links, front lower, red (2) (5x104mm, powder coated steel) (assembled with hollow balls) (for use with #8140R TRX-4® Long Arm Lift Kit)**
8145 **Suspension links, rear lower (2) (5x115mm, steel) (assembled with hollow balls) (for use with #8140 TRX-4® Long Arm Lift Kit)**
8145X **Suspension links, rear lower, blue (2) (5x115mm, powder coated steel) (assembled with hollow balls) (for use with #8140X TRX-4® Long Arm Lift Kit)**
8145R **Suspension links, rear lower, red (2) (5x115mm, powder coated steel) (assembled with hollow balls) (for use with #8140R TRX-4® Long Arm Lift Kit)**
8142 **Suspension links, rear upper (2) (5x115mm, steel) (assembled with hollow balls) (for use with #8140 TRX-4® Long Arm Lift Kit)**
8142X **Suspension links, rear upper, blue (2) (5x115mm, powder coated steel) (assembled with hollow balls) (for use with #8140X TRX-4® Long Arm Lift Kit)**
8142R **Suspension links, rear upper, red (2) (5x115mm, powder coated steel) (assembled with hollow balls) (for use with #8140R TRX-4® Long Arm Lift Kit)**
8172 **Tires and wheels, assembled (Method 105 2.2" black chrome beadlock wheels, Canyon Trail 5.3x2.2" tires, foam inserts) (1 left, 1 right)**
8181 **Tires and wheels, assembled, glued (TRX-4® Sport 2.2" wheels, Canyon Trail 5.3x2.2" tires) (2)**
8170 **Tires, Canyon Trail 5.3x2.2"/ foam inserts (2)**
8171 **Wheels, Method 105 2.2" (black chrome, beadlock) (beadlock rings sold separately)**
8171A **Wheels, Method 105 2.2" (charcoal gray, beadlock) (beadlock rings sold separately)**

Motors & Electronics

1926 Antenna caps, vinyl (2)/ antenna spool
1726 Antenna, tube (1)/ vinyl antenna cap (1)/ wire retainer (1)
2262 **BEC, complete (includes receiver box cover and seals)**
2064 Gear set (for 2065 waterproof sub-micro servo)
2064X **Gear set, metal (for 2065X waterproof sub-micro servo)**
2072X Gear set, metal (for 2070, 2075 servos)
2252 **Gear set, metal (for 2250, 2255 servos)**
2072R **Gear set, metal, high speed (for 2070, 2075 servos)**
8290X **Motor mount plate, 6061-T6 aluminum (blue-anodized)**
8290A **Motor mount plate, 6061-T6 aluminum (charcoal gray-anodized)**
8290G **Motor mount plate, 6061-T6 aluminum (green-anodized)**
8290R **Motor mount plate, 6061-T6 aluminum (red-anodized)**
3975R Motor, Titan® 550, reverse rotation (21-turns/ 14 volts) (1)
8290 Plate, motor/ upper spur gear cover
2254 **Servo case, aluminum (blue-anodized) (middle) (for 2250 servo)**
2253 **Servo case, aluminum (red-anodized) (middle) (for 2255 servo)**
2251 **Servo case, plastic (top, middle, bottom)/ gaskets/ hardware (for 2250, 2255 servos)**
2063 Servo case/gaskets (for 2065 waterproof sub-micro servo)
2063X **Servo case/gaskets (for 2065X metal gear, waterproof, sub-micro servo)**
5669 Servo horn (with built-in spring and hardware) (for Summit locking differential)
2075R **Servo, digital high-speed, metal gear (ball bearing), waterproof**
2250 **Servo, digital high-torque 330 coreless, metal gear (ball bearing), waterproof (#2262 external BEC and #8247X metal servo horn recommended for optimal performance)**
2255 **Servo, digital high-torque 400 brushless, metal gear (ball bearing), waterproof (#2262 external BEC and #8247X metal servo horn recommended for optimal performance)**
2075X Servo, digital high-torque, metal gear (ball bearing), waterproof
2065 Servo, sub-micro, waterproof
2065X **Servo, sub-micro, waterproof, metal gear**
3025 XL-5HV 3s Electronic Speed Control, waterproof (low-voltage detection, fwd/rev/brake)
2261 **Y-harness, BEC**

Radio System, Batteries & Chargers

2849X **4000mAh 11.1v 3-Cell 25C LiPo Battery**
2872X **5000mAh 11.1v 3-Cell 25C LiPo Battery**
2842X **5000mAh 7.4v 2-Cell 25C LiPo Battery**
2843X **5800mAh 7.4v 2-Cell 25C LiPo Battery**
2869X **7600mAh 7.4v 2-Cell 25C LiPo Battery**
2976 **AC to DC converter, 40W**
2938X **Adapter, Traxxas® iD® LiPo battery (adapts Traxxas iD batteries to separate balance ports)**
1726 Antenna, tube (1)/ vinyl antenna cap (1)/ wire retainer (1)
2943 **Battery charge indicators (green (4), blue (4), grey (4))**
6548 Battery door, transmitter (replacement for #6516, 6517, 6528, 6529, 6530 transmitters)
8222 **Battery strap (for 2200 2-cell and 1400 3-cell LiPo batteries)**
2914 **Battery, Power Cell AA Alkaline (4)**
2923X **Battery, Power Cell, 3000mAh (NiMH, 7-C flat, 8.4V)**
2940X **Battery, Series 3 Power Cell, 3300mAh (NiMH, 7-C flat, 8.4V)**
2950X **Battery, Series 4 Power Cell, 4200mAh (NiMH, 7-C flat, 8.4V)**
2960X **Battery, Series 5 Power Cell, 5000mAh (NiMH, 7-C flat, 8.4V)**
2983 **Battery/charger completer pack (includes #2969 2-amp NiMH peak detecting AC charger (1), #2923X 3000mAh 8.4V 7-cell NiMH battery (1))**
2992 **Battery/charger completer pack (includes #2970 iD® charger (1), #2843X 5800mAh 7.4V 2-cell 25C LiPo battery (1))**
2994 **Battery/charger completer pack (includes #2970 iD® charger (1), #2849X 4000mAh 11.1v 3-Cell 25C LiPo Battery (1))**
2991 **Battery/charger completer pack (includes #2972 Dual iD® charger (1), #2869X 7600mAh 7.4V 2-cell 25C LiPo battery (2))**
2262 **BEC, complete (includes receiver box cover and seals)**
2975 **Charger, DC, 4 amp (6 - 7 cell, 7.2 - 8.4 volt, NiMH)**
2972 **Charger, EZ-Peak® Dual, 100W, NiMH/LiPo with iD® Auto Battery Identification**
2973 **Charger, EZ-Peak® Live Dual, 200W, NiMH/LiPo with iD® Auto Battery Identification**
2971 **Charger, EZ-Peak® Live, 100W, NiMH/LiPo with iD® Auto Battery Identification**
2970 **Charger, EZ-Peak® Plus, 4 amp, NiMH/LiPo with iD® Auto Battery Identification**
6525 **Communication link, telemetry expander**
6541 **Connector, power tap (with cable) (long)/ wire tie**
6512 Cover plate, Traxxas Link™ Wireless Module
2978 **Fuse, charger, 5A (2) (for #2974, 2975, 2977)**
2064 Gear set (for 2065 waterproof sub-micro servo)
2064X **Gear set, metal (for 2065X waterproof sub-micro servo)**
2072X Gear set, metal (for 2070, 2075 servos)
2252 **Gear set, metal (for 2250, 2255 servos)**
2072R **Gear set, metal, high speed (for 2070, 2075 servos)**
2968X **LiPo cell voltage checker/balancer (includes #2938X adapter for Traxxas® iD® batteries)**
2968 **LiPo cell voltage checker/balancer (requires #2938X adapter for Traxxas® iD® batteries)**
6561 **Mount, telemetry expander**
6535 **Mount, temperature sensor (electric motors)/ wire tie/ thermal pad**
6533 Receiver, micro, TQi 2.4GHz with telemetry & TSM (5-channel)
6552 **Seal kit, expander box (includes o-ring, seals, and silicone grease)**
6526 **Sensor, auto-detectable, temperature**
6527 **Sensor, auto-detectable, voltage**
6521 **Sensor, temperature and voltage (long)**
2254 **Servo case, aluminum (blue-anodized) (middle) (for 2250 servo)**
2253 **Servo case, aluminum (red-anodized) (middle) (for 2255 servo)**
2251 **Servo case, plastic (top, middle, bottom)/ gaskets/ hardware (for 2250, 2255 servos)**
2063 Servo case/gaskets (for 2065 waterproof sub-micro servo)
2063X **Servo case/gaskets (for 2065X metal gear, waterproof, sub-micro servo)**
2075R **Servo, digital high-speed, metal gear (ball bearing), waterproof**
2250 **Servo, digital high-torque 330 coreless, metal gear (ball bearing), waterproof (#2262 external BEC and #8247X metal servo horn recommended for optimal performance)**
2255 **Servo, digital high-torque 400 brushless, metal gear (ball bearing), waterproof (#2262 external BEC and #8247X metal servo horn recommended for optimal performance)**
2075X Servo, digital high-torque, metal gear (ball bearing), waterproof
2065 Servo, sub-micro, waterproof

TRX-4 CHASSIS KIT (82016-4)

2065X Servo, sub-micro, waterproof, metal gear
6553X Telemetry expander 2.0 and GPS module 2.0, TQi radio system
6550X Telemetry expander 2.0, TQi radio system (for use only with #6551X GPS module)
6551X Telemetry GPS module 2.0, TQi radio system (for use only with #6550X telemetry expander)
6509R TQi 2.4 GHz High Output radio system, 2-channel, Traxxas Link™ enabled, TSM (2-ch transmitter, 5-ch micro receiver)
6507R TQi 2.4 GHz High Output radio system, 4-channel with Traxxas Link™ Wireless Module, TSM (4-ch transmitter, 5-ch micro receiver)
6530 Transmitter, TQi Traxxas Link™ enabled, 2.4GHz high output, 4-channel (transmitter only)
6511 Traxxas Link™ Wireless Module
2261 Y-harness, BEC

Scale Details

8022T Fuel canisters (black) (2)/ 3x8 FCS (1)
8022R Fuel canisters (blue) (2)/ 3x8 FCS (1)
8022 Fuel canisters (red) (2)/ 3x8 FCS (1)
8022X Fuel canisters (white) (2)/ 3x8 FCS (1)
8022A Fuel canisters (yellow) (2)/ 3x8 FCS (1)
8023T Jack (black) (1)/ 2x8 BCS (1)
8023 Jack (red) (1)/ 2x8 BCS (1)

Shocks (GTS)

8266 Body, GTS shock (aluminum, silver-anodized) (1)
8266X Body, GTS shock (hard-anodized, PTFE-coated aluminum) (1)
8266A Body, GTS shock, aluminum (blue-anodized) (1)
8266G Body, GTS shock, aluminum (green-anodized) (1)
8266R Body, GTS shock, aluminum (red-anodized) (1)
8264 Caps & spring retainers, GTS shocks (upper cap (2)/ hollow balls (4)/ bottom cap (2)/ upper retainer (2)/ lower retainer (2))
8274 Hollow ball set, complete, TRX-4® (aluminum, PTFE-coated)
5475 Multi-tool (plastic)
8261 Piston, damper (red) (4)/ e-clips (8)
8262 Rebuild kit, GTS shocks (x-rings, o-rings, pistons, bushings, e-clips, and rod ends)
8263 Shock shaft, 3x47mm (GTS) (2)
8263T Shock shaft, 3x47mm (GTS) (titanium nitride-coated) (2)
8260X Shocks, GTS hard-anodized, PTFE-coated aluminum bodies with TiN shafts (assembled with spring retainers) (2)
8260A Shocks, GTS, aluminum (blue-anodized) (assembled with spring retainers) (2)
8260G Shocks, GTS, aluminum (green-anodized) (assembled with spring retainers) (2)
8260R Shocks, GTS, aluminum (red-anodized) (assembled with spring retainers) (2)
8260 Shocks, GTS, silver aluminum (assembled with spring retainers) (2)
1666 Silicone shock oil (30 wt)

Slipper Clutch Components

8292 Input shaft/ output shaft (transmission)
8286 Output shafts (transfer case), front & rear
8254 Rebuild kit, slipper clutch (steel disc (2)/ friction insert (2)/ 4.0mm NL (1)/ spring washers (4), metal washer (1))
8249 Slipper eliminator plate

Springs

8042 Springs, shock (natural finish) (GTS) (0.22 rate, yellow stripe) (2)
8043 Springs, shock (natural finish) (GTS) (0.30 rate, white stripe) (2)
8044 Springs, shock (natural finish) (GTS) (0.39 rate, orange stripe) (2)
8041 Springs, shock (natural finish) (GTS) (0.45 rate) (2)
8040 Springs, shock (natural finish) (GTS) (0.54 rate, green stripe) (2)
8045 Springs, shock (natural finish) (GTS) (0.61 rate, blue stripe) (2)

Spur Gears & Pinion Gears

6746 Gear, 10-T pinion (32-p) (steel)/ set screw
6747 Gear, 11-T pinion (32-p) (steel)/ set screw
3942X Gear, 12-T pinion (32-p), heavy duty (machined, hardened steel)/ set screw
3943X Gear, 13-T pinion (32-p), heavy duty (machined, hardened steel)/ set screw
3944X Gear, 14-T pinion (32-p), heavy duty (machined, hardened steel)/ set screw
3945X Gear, 15-T pinion (32-p), heavy duty (machined, hardened steel)/ set screw
3946X Gear, 16-T pinion (32-p), heavy duty (machined, hardened steel)/ set screw
3947X Gear, 17-T pinion (32-p), heavy duty (machined, hardened steel)/ set screw
3948X Gear, 18-T pinion (32-p), heavy duty (machined, hardened steel)/ set screw
3949X Gear, 19-T pinion (32-p), heavy duty (machined, hardened steel)/ set screw
3950X Gear, 20-T pinion (32-p), heavy duty (machined, hardened steel)/ set screw
3951X Gear, 21-T pinion (32-p), heavy duty (machined, hardened steel)/ set screw
3952X Gear, 22-T pinion (32-p), heavy duty (machined, hardened steel)/ set screw
6745 Gear, 9-T pinion (32-p) (steel)/ set screw
8279 Ring gear, differential/ pinion gear, differential
8052 Spur gear, 39-tooth (32-pitch)
8053 Spur gear, 45-tooth (32-pitch)

Steering Components

8232 Caster blocks (portal drive), left & right/ kingpin bushings (4)
8232X Caster blocks, 6061-T6 aluminum (blue-anodized), left and right
8232A Caster blocks, 6061-T6 aluminum (charcoal gray-anodized), left and right
8232G Caster blocks, 6061-T6 aluminum (green-anodized), left and right
8232R Caster blocks, 6061-T6 aluminum (red-anodized), left and right
2072X Gear set, metal (for 2070, 2075 servos)
2072R Gear set, metal, high speed (for 2070, 2075 servos)
8274 Hollow ball set, complete, TRX-4® (aluminum, PTFE-coated)
5355 Hollow ball, tall centered (2)/ tall offset hollow ball (2)/ bump steer adjustment shims; 3.5mm (2), 1.17mm (2)
8275 Rod end set, complete (standard (10), angled 10-degrees (8), offset (4))
8276 Rod ends (10)
8277 Rod ends, angled 10-degrees (8)
2742 Rod ends, long (6)/ hollow ball connectors (6)
8278 Rod ends, offset (4)
8247X Servo horn, steering, metal/ 3x14 BCS (1)
2075R Servo, digital high-speed, metal gear (ball bearing), waterproof
2075X Servo, digital high-torque, metal gear (ball bearing), waterproof
5529 Shim set, 3x7x1mm (2), 3x6x0.5mm (4), 3x7x2mm (2)/ hollow balls, captured (4)
8246 Steering link, 5x60mm (1)/ draglink, 5x117mm (1) (steel)
8243 Suspension link, front, 5x100mm (lower) (steel) (2)
8244 Suspension link, front, 5x63mm (upper) (steel) (2)
8248 Suspension link, rear, 5x109mm (upper or lower) (steel) (2)
8245 Suspension link, rear, 5x121mm (upper or lower) (steel) (2)

Suspension Linkage

8274 Hollow ball set, complete, TRX-4® (aluminum, PTFE-coated)
5355 Hollow ball, tall centered (2)/ tall offset hollow ball (2)/ bump steer adjustment shims; 3.5mm (2), 1.17mm (2)
8275 Rod end set, complete (standard (10), angled 10-degrees (8), offset (4))
8276 Rod ends (10)
8277 Rod ends, angled 10-degrees (8)
2742 Rod ends, long (6)/ hollow ball connectors (6)
8278 Rod ends, offset (4)
5529 Shim set, 3x7x1mm (2), 3x6x0.5mm (4), 3x7x2mm (2)/ hollow balls, captured (4)
8243 Suspension link, front, 5x100mm (lower) (steel) (2)
8244 Suspension link, front, 5x63mm (upper) (steel) (2)
8248 Suspension link, rear, 5x109mm (upper or lower) (steel) (2)
8245 Suspension link, rear, 5x121mm (upper or lower) (steel) (2)

Team Traxxas Items

2514 Decal sheet, racing sponsors
6160X DVD, Maxx® Power! Full Throttle Action (sleeve)
9950 Official Team Traxxas® racing decal set (flag logo/ 6-color)
9909 Traxxas® racing banner, red & black (3x7 feet)

Tires & Wheels

8169T Beadlock rings, black (1.9") (aluminum) (4)/ 2x10 CS (48)
8168T Beadlock rings, black (2.2") (aluminum) (4)/ 2x10 CS (48)
8169X Beadlock rings, blue (1.9") (aluminum) (4)/ 2x10 CS (48)
8168X Beadlock rings, blue (2.2") (aluminum) (4)/ 2x10 CS (48)
8169G Beadlock rings, green (1.9") (aluminum) (4)/ 2x10 CS (48)
8168G Beadlock rings, green (2.2") (aluminum) (4)/ 2x10 CS (48)
8169A Beadlock rings, orange (1.9") (aluminum) (4)/ 2x10 CS (48)
8168A Beadlock rings, orange (2.2") (aluminum) (4)/ 2x10 CS (48)
8169R Beadlock rings, red (1.9") (aluminum) (4)/ 2x10 CS (48)
8168R Beadlock rings, red (2.2") (aluminum) (4)/ 2x10 CS (48)
8169 Beadlock rings, satin (1.9") (aluminum) (4)/ 2x10 CS (48)
8168 Beadlock rings, satin (2.2") (aluminum) (4)/ 2x10 CS (48)
8176 Center caps, wheel (chrome) (4)/ decal sheet (requires #8255A extended stub axle)
8174 Tires and wheels, assembled (Method 105 1.9" black chrome beadlock wheels, Canyon Trail 4.6x1.9" tires, foam inserts) (1 left, 1 right)

8172	**Tires and wheels, assembled (Method 105 2.2" black chrome beadlock wheels, Canyon Trail 5.3x2.2" tires, foam inserts) (1 left, 1 right) (for use with TRX-4 Long Arm Lift Kit)**
8166X	**Tires and wheels, assembled, glued (1.9" chrome wheels, Canyon Trail 4.6x1.9" tires) (4)/ center caps (4)/ decal sheet (requires #8255A extended stub axle)**
8166	**Tires and wheels, assembled, glued (1.9" chrome wheels, Canyon Trail 4.6x1.9" tires) (2)/ center caps (2)/ decal sheet (requires #8255A extended stub axle)**
8177	**Tires and wheels, assembled, glued (1.9" chrome wheels, Canyon Trail 4.6x1.9" tires) (2)/ center caps (2)/ decal sheet (requires #8255A extended stub axle)**
8183X	**Tires and wheels, assembled, glued (1.9" classic chrome wheels, Canyon Trail 4.6x1.9" tires) (4)/ center caps (4) (requires #8255A extended stub axle)**
8273	**Tires and wheels, assembled, glued (Tactical 1.9" wheels, Canyon Trail 4.6x1.9" tires) (2)**
8272X	**Tires and wheels, assembled, glued (TRX-4® 1.9" satin beadlock wheels, Canyon Trail 4.6x1.9" tires) (2)**
8272	Tires and wheels, assembled, glued (TRX-4® 1.9" wheels, Canyon Trail 4.6x1.9" tires) (2)
8181	**Tires and wheels, assembled, glued (TRX-4® Sport 2.2" wheels, Canyon Trail 5.3x2.2" tires) (2) (for use with TRX-4 Long Arm Lift Kit)**
8270	Tires, Canyon Trail 4.6x1.9" (S1 compound)/ foam inserts (2)
8170	**Tires, Canyon Trail 5.3x2.2"/ foam inserts (2) (for use with TRX-4 Long-Arm Lift Kit)**
8269	Wheel hubs, 12mm hex (2)/ stub axle pins (2) (steel)
8269X	**Wheel hubs, 12mm hex, 6061-T6 aluminum (blue-anodized) (4)/ screw pin (4)**
8269A	**Wheel hubs, 12mm hex, 6061-T6 aluminum (charcoal gray-anodized) (4)/ screw pin (4)**
8269G	**Wheel hubs, 12mm hex, 6061-T6 aluminum (green-anodized) (4)/ screw pin (4)**
8269R	**Wheel hubs, 12mm hex, 6061-T6 aluminum (red-anodized) (4)/ screw pin (4)**
8175	**Wheels, 1.9", chrome (2)/ center caps (2)/ decal sheet (requires #8255A extended stub axle)**
8173	**Wheels, Method 105 1.9" (black chrome, beadlock) (beadlock rings sold separately)**
8173A	**Wheels, Method 105 1.9" (charcoal gray, beadlock) (beadlock rings sold separately)**
8171	**Wheels, Method 105 2.2" (black chrome, beadlock) (beadlock rings sold separately) (for use with TRX-4 Long Arm Lift Kit)**
8171A	**Wheels, Method 105 2.2" (charcoal gray, beadlock) (beadlock rings sold separately) (for use with TRX-4 Long Arm Lift Kit)**
8268	**Wheels, Tactical 1.9 (2)**
8271	Wheels, TRX-4® 1.9 (2)
8271X	**Wheels, TRX-4® 1.9 (satin beadlock) (2)**

Transmission Components

8283	Cable, T-lock (front)
8284	Cable, T-lock (rear)
8289	Drive hub, 2-speed/ shift dog/ shift fork/ 2-speed linkage
8293X	**Gear set, transmission, metal (includes 18T, 30T input gears, 36T output gear, 2x9.8 pins (5))**
8291	Gearbox housing (includes main housing, front housing, & cover)
8285	Gears, transfer case (3)
5041	Grease, premium high performance (20cc)
8292	Input shaft/ output shaft (transmission)
8290X	**Motor mount plate, 6061-T6 aluminum (blue-anodized)**
8290A	**Motor mount plate, 6061-T6 aluminum (charcoal gray-anodized)**
8290G	**Motor mount plate, 6061-T6 aluminum (green-anodized)**
8290R	**Motor mount plate, 6061-T6 aluminum (red-anodized)**
8295	Output drive, transmission or differential (pin retainer (1)/ drive cup (1)/ drive ball (1)/ drive pin (1)/ 3x11 screw pin (1)/ cross pin (black) (1) 3x6 BCS with threadlock (1))
8294	Output gear, high range, 24T (metal)
8286	Output shafts (transfer case), front & rear
8290	Plate, motor/ upper spur gear cover
8249	**Slipper eliminator plate**
8296	**Transmission gears, single speed, metal**

Traxxas Tools

3433X	**Body reamer (aluminum handle)**
3433	**Body reamer (plastic handle)**
3436	**Cap, body reamer**
3432	**Scissors, curved tip**
3431	**Scissors, straight tip**
8712	**Speed Bit Essentials Set, hex and nut driver, 7-piece, includes premium handle (medium), travel pouch, hex drivers (straight: 1.5mm, 2.0mm, 2.5mm) and nut drivers (5.0mm, 5.5mm, 7.0mm, and 8.0mm), 1/4" drive**
8721	**Speed bit handle, medium (one piece)**
8720	**Speed bit handle, premium, large (rubber overmold)**
8722	**Speed bit handle, premium, medium (rubber overmold)**
8710	**Speed Bit Master Set, hex and nut driver, 13-piece, includes premium handle (medium), travel pouch, hex drivers (straight: 1.5mm, 2.0mm, 2.5mm, 3.0mm), (ball-end: 2.0mm, 2.5mm, 3.0mm), and nut drivers (4.00mm, 4.50mm, 5.00mm, 5.50mm, 7.00mm, 8.00mm),**
8711	**Speed Bit Master Set, hex driver, 7-piece straight and ball end, includes premium handle (medium), travel pouch, hex drivers (straight: 1.5mm, 2.0mm, 2.5mm, 3.0mm) (ball end: 2.0mm, 2.5mm, 3.0mm), 1/4" drive**
8719	**Speed Bit Master Set, nut driver, 6-piece, includes premium handle (medium), travel pouch, and nut drivers (4.0mm, 4.5mm, 5.0mm, 5.5mm, 7.0mm, 8.0mm), 1/4" drive**
8716	**Speed Bit Set, hex driver, 2-piece ball-end (2.0mm, 2.5mm), 1/4" drive**
8716X	**Speed Bit Set, hex driver, 3-piece ball-end (2.0mm, 2.5mm, 3.0mm), 1/4" drive**
8715	**Speed Bit Set, hex driver, 3-piece straight (1.5mm, 2.0mm, 2.5mm), 1/4" drive**
8715X	**Speed Bit Set, hex driver, 4-piece straight (1.5mm, 2.0mm, 2.5mm, 3.0mm), 1/4" drive**
3415	**Tool set with pouch (includes 1.5mm, 2.0mm, 2.5mm, 3.0mm, 3.5mm, 4mm drivers/ 4mm, 5mm, 5.5mm, 7mm and 8mm nut drivers/ 2mm, 4mm, and 5mm slotted screwdrivers/ #00 Phillips, #0 Phillips, and #1 Phillips screwdrivers/ 4mm and 8mm wrench/ driver handle**

TRX-4® Traxx™

8889	**Bearing retainers, inner (2), outer (2)**
8890	**Drive wheel (1)**
8885	**Shock mounts (frame, left (2), frame, right (2))/ portal mounts (1 each, front (left & right), rear (left & right))**
8888	**Spring (4)**
8887	**Stub axle (1)**
8886	**Stub axle nut (4)**
8891	**Tension wheels (6)/ road wheels (4)**
8881	**Traxx™, front, left (assembled) (requires #8886 stub axle, #7061 GTR shock, & #8878 or #8895 rubber track)**
8882	**Traxx™, front, right (assembled) (requires #8886 stub axle, #7061 GTR shock, & #8878 or #8895 rubber track)**
8883	**Traxx™, rear, left (assembled) (requires #8886 stub axle, #7061 GTR shock, & #8879 or #8896 rubber track)**
8884	**Traxx™, rear, right (assembled) (requires #8886 stub axle, #7061 GTR shock, & #8879 or #8896 rubber track)**
8880	**Traxx™, TRX-4® (4) (complete set, front & rear)**
8895	**Treads, All-Terrain, TRX-4® Traxx™ (front, left or right) (rubber) (1)**
8896	**Treads, All-Terrain, TRX-4® Traxx™ (rear, left or right) (rubber) (1)**

If you have questions or need technical assistance, call Traxxas at:

1-888-TRAXXAS

(1-888-872-9927) (U.S. residents only)

For orders, calls outside the U.S., and other information, call 972-549-3000, or fax to 972-549-3011 e-mail Traxxas at support@Traxxas.com

TRAXXAS.COM

REV. 201020 0905

TRX-4 SPORT

MODEL 82024-4

4WD ELECTRIC CRAWLER



TQ 2-CHANNEL 2.4GHz TRANSMITTER

TITAN 21T 550 MOTOR AND XL-5 HV ELECTRONIC SPEED CONTROL

GTS ALUMINUM SHOCKS

BUILT TO PERFORM

The Traxxas TRX-4 Sport is a technical powerhouse purpose-built from the ground up to conquer any terrain. The Sport packs in all the features necessary for crawling while keeping weight as low as possible. Portal axles provide unprecedented ground clearance with the smooth damping action of aluminum GTS shocks. The lightweight body keeps the CG low for sure-footed climbing and permanently locked differentials transform the motor's torque into unstoppable forward motion. Built Traxxas-Tough, the Sport adds a dedicated hardcore crawler to the powerful TRX-4 lineup.

TRX-4 Front Assembly

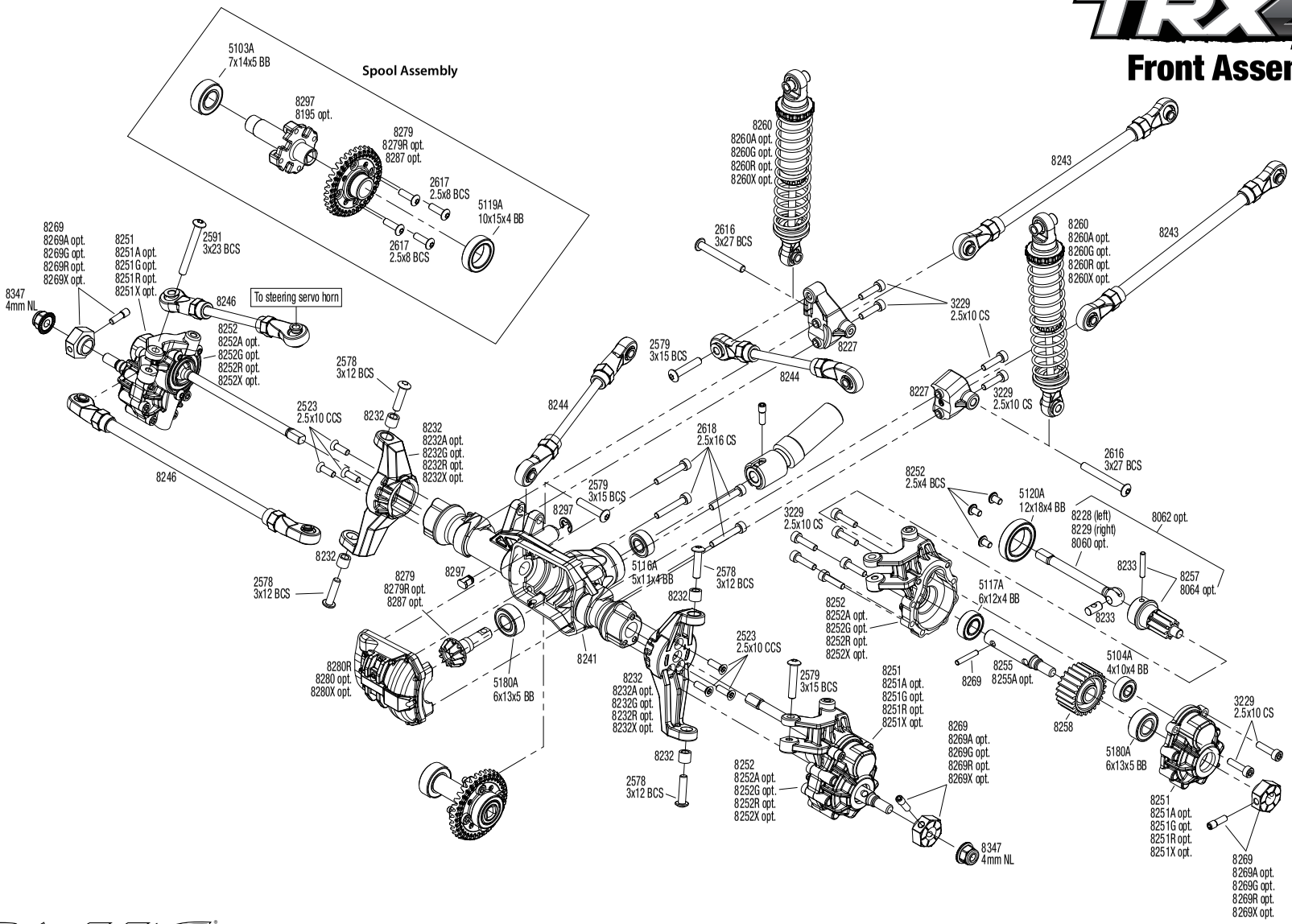

See Parts List for a complete listing of optional accessories.

REV 201020-R13

Specifications on this page are subject to change without notice. Every attempt has been made to ensure the accuracy of this drawing; however, Traxxas cannot be held responsible for typographical or other errors.

Questions? Call toll-free, 1-888-TRAXXAS

TRAXXAS

TRX4

Chassis Assembly

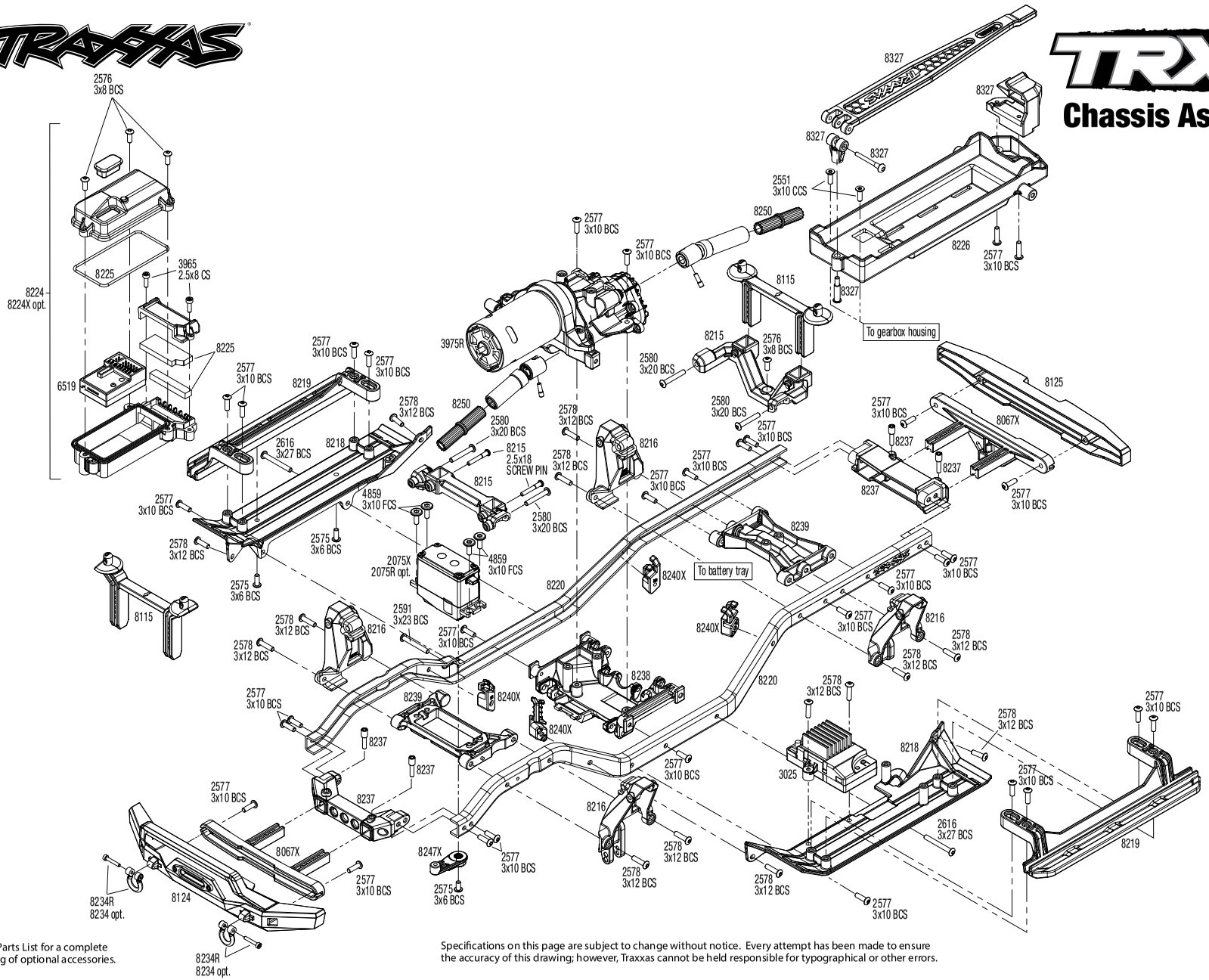

See Parts List for a complete listing of optional accessories.

Specifications on this page are subject to change without notice. Every attempt has been made to ensure the accuracy of this drawing; however, Traxxas cannot be held responsible for typographical or other errors.

REV 201020-R13

TRAXXAS

TRX4

Rear Assembly

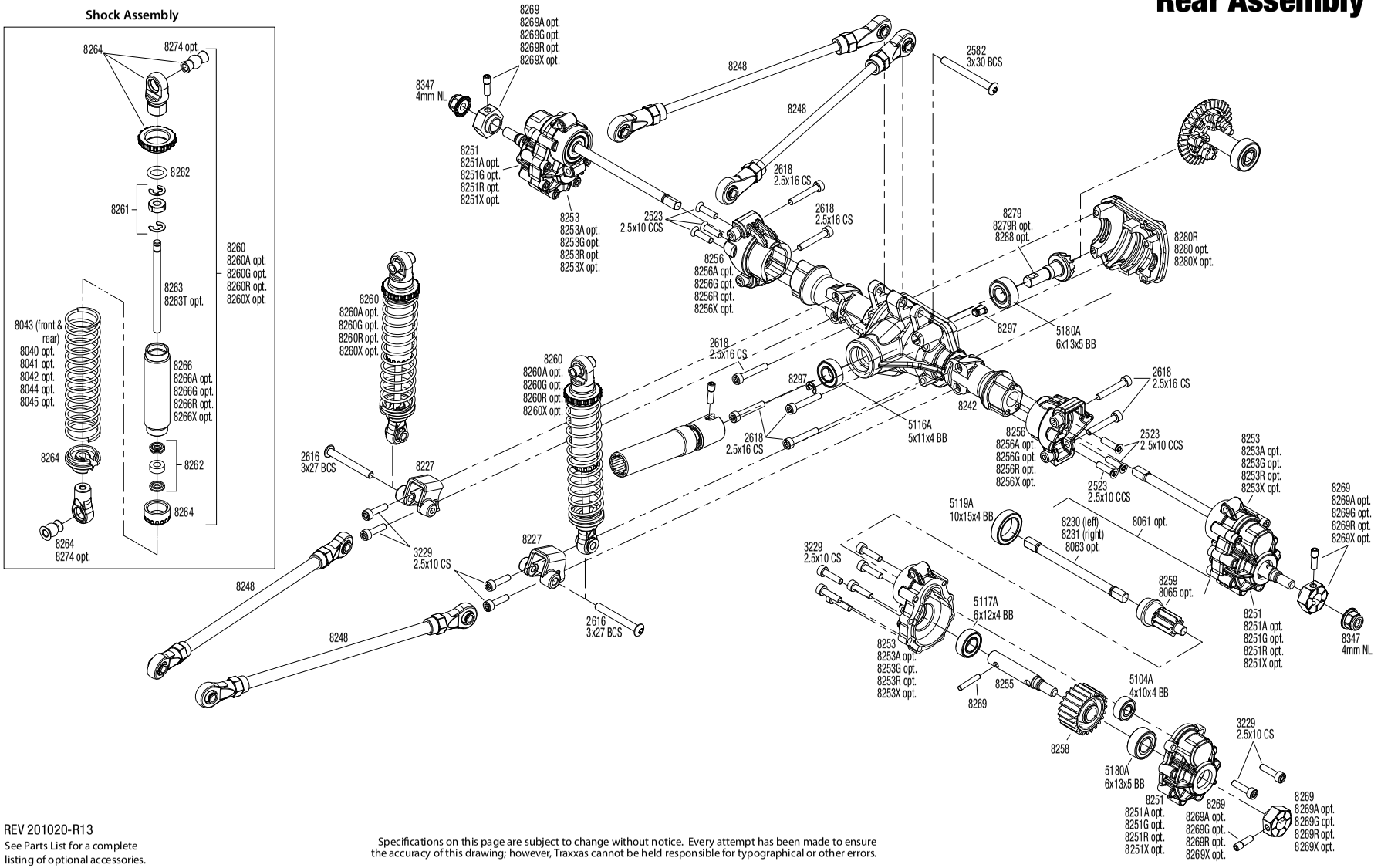

REV 201020-R13

See Parts List for a complete listing of optional accessories.

Specifications on this page are subject to change without notice. Every attempt has been made to ensure the accuracy of this drawing; however, Traxxas cannot be held responsible for typographical or other errors.

TRX-4 SPORT (82024-4)

EXPLODED VIEWS

Transmission Assembly

REV 201020-R13

Specifications on this page are subject to change without notice. Every attempt has been made to ensure the accuracy of this drawing; however, Traxxas cannot be held responsible for typographical or other errors.

See Parts List for a complete listing of optional accessories.

Optional Two-Speed Transmission Conversion Kit available as part #8196

Questions? **Call toll-free, 1-888-TRAXXAS**

TRX-4

TRAXXAS

Link Dimensions

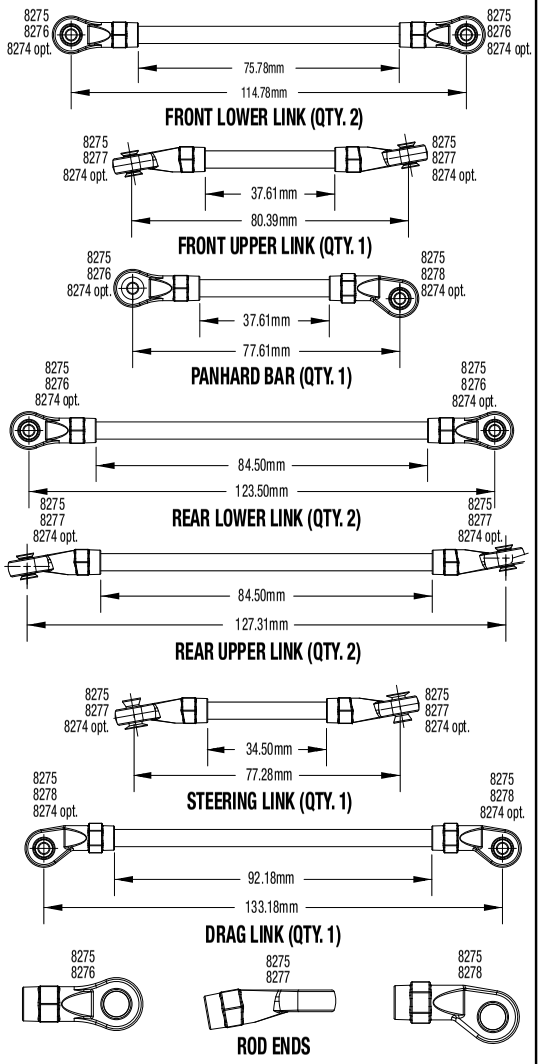

For standard hollow ball replacement, use part #5349.

Modular Assembly

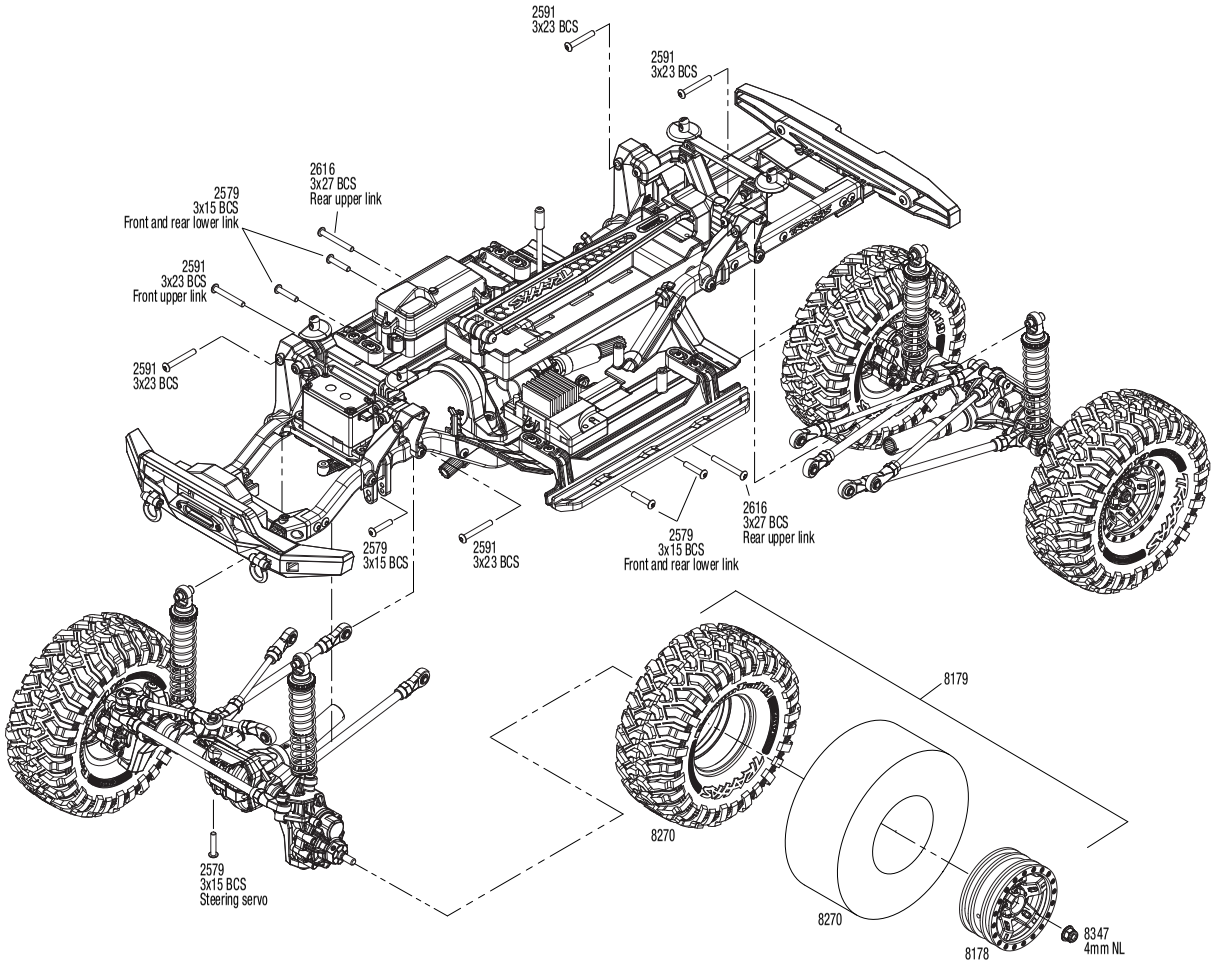

See Parts List for a complete listing of optional accessories.

REV 201020-R13

Specifications on this page are subject to change without notice. Every attempt has been made to ensure the accuracy of this drawing; however, Traxxas cannot be held responsible for typographical or other errors.

TRX-4 SPORT (82024-4)

PARTS SHOWN IN BOLD ARE OPTIONAL ACCESSORIES.

Part categories and individual part listings are arranged alphabetically.

Axle Components

8241	Axle housing, front
8242	Axle housing, intermediate (TRX-6™) or rear (TRX-4®)
8227	Axle mount set (complete) (front & rear) (for suspension links)
8228	Axle shaft, front (left)/ drive pin/ cross pin
8229	Axle shaft, front (right)/ drive pin/ cross pin
8060	**Axle shaft, front, heavy duty (left & right) (requires #8064 front portal drive input gear)**
8062	**Axle shaft, front, heavy duty (left & right)/ portal drive input gear (machined) (2) (assembled)**
8230	Axle shaft, rear (left)
8231	Axle shaft, rear (right)
8061	**Axle shaft, rear, heavy duty (left & right)/ portal drive input gear, rear (machined)**
8063	**Axle, rear, heavy duty (left & right) (requires #8065 rear portal drive input gear)**
8233	Cross pin (2)/ drive pin (2) (to rebuild front axle shafts)
8256	Portal drive axle mount, rear (left & right)
8256X	**Portal drive axle mount, rear, 6061-T6 aluminum (blue-anodized) (left and right)/ 2.5x16 CS (4)**
8256A	**Portal drive axle mount, rear, 6061-T6 aluminum (charcoal gray-anodized) (left and right)/ 2.5x16 CS (4)**
8256G	**Portal drive axle mount, rear, 6061-T6 aluminum (green-anodized) (left and right)/ 2.5x16 CS (4)**
8256R	**Portal drive axle mount, rear, 6061-T6 aluminum (red-anodized) (left and right)/ 2.5x16 CS (4)**
8252	Portal drive housing, inner, front (left & right)/ 2.5x4 BCS (6)
8253	Portal drive housing, inner, rear (left or right) (2)
8251	Portal drive housing, outer (front or rear) (2)
8064	**Portal drive input gear, front (machined) (left or right) (requires #8060 front axle shaft)**
8257	Portal drive input gear, front/ drive pin/ cross pin
8259	Portal drive input gear, rear
8065	**Portal drive input gear, rear (machined) (left or right) (requires #8063 rear axle)**
8258	Portal drive output gear, front or rear
8252X	**Portal housings, inner (front), 6061-T6 aluminum (blue-anodized) (2)/ 3x12 BCS (2)**
8252A	**Portal housings, inner (front), 6061-T6 aluminum (charcoal gray-anodized) (2)/ 3x12 BCS (2)**
8252G	**Portal housings, inner (front), 6061-T6 aluminum (green-anodized) (2)/ 3x12 BCS (2)**
8252R	**Portal housings, inner (front), 6061-T6 aluminum (red-anodized) (2)/ 3x12 BCS (2)**
8253X	**Portal housings, inner (rear), 6061-T6 aluminum (blue-anodized) (2)/ 2.5x10 CS (2)**
8253A	**Portal housings, inner (rear), 6061-T6 aluminum (charcoal gray-anodized) (2)/ 2.5x10 CS (2)**
8253G	**Portal housings, inner (rear), 6061-T6 aluminum (green-anodized) (2)/ 2.5x10 CS (2)**
8253R	**Portal housings, inner (rear), 6061-T6 aluminum (red-anodized) (2)/ 2.5x10 CS (2)**
8251X	**Portal housings, outer, 6061-T6 aluminum (blue-anodized) (2)/ 2.5x10 CS (12)**
8251A	**Portal housings, outer, 6061-T6 aluminum (charcoal gray-anodized) (2)/ 2.5x10 CS (12)**
8251G	**Portal housings, outer, 6061-T6 aluminum (green-anodized) (2)/ 2.5x10 CS (12)**
8251R	**Portal housings, outer, 6061-T6 aluminum (red-anodized) (2)/ 2.5x10 CS (12)**
8255	Stub axle (portal drive) (2)
8255A	**Stub axle, extended (portal drive) (2)**
8267	**Weight, portal housing, brass (34 grams) (2)/ 2.5x8 CS (6) (requires #8251X, 8251R, 8251A, or 8251G outer portal housing)**

Bearings & Bushings

5119A	Ball bearings, black rubber sealed (10x15x4mm) (2)
5120A	Ball bearings, black rubber sealed (12x18x4mm) (2)
5104A	Ball bearings, black rubber sealed (4x10x4mm) (2)
5115A	Ball bearings, black rubber sealed (5x10x4mm) (2)
5116A	Ball bearings, black rubber sealed (5x11x4mm) (2)
5114A	Ball bearings, black rubber sealed (5x8x2.5mm) (2)
5117A	Ball bearings, black rubber sealed (6x12x4mm) (2)
5180A	Ball bearings, black rubber sealed (6x13x5mm) (2)
5103A	Ball bearings, black rubber sealed (7x14x5mm) (2)

Body (1969 Chevrolet Blazer)

9112	**Body, Chevrolet Blazer (1969 - 1970) (clear, requires painting) (includes grille, side mirrors, door handles, windshield wipers, decals, window masks)**
9112X	**Body, Chevrolet Blazer (1969), complete (black) (includes grill, side mirrors, door handles, windshield wipers, front & rear bumpers, decals)**
9125	**Bumper pads/ bumper guards (chrome)/ 2.5x10 BCS (4)/ 2.7mm drill bit (fits #9126 or #9127 front bumpers)**
9127	**Bumper, front (chrome)/ bumper mount/ 3x10 BCS (2)**
9124	**Bumper, rear (chrome)/ bumper mount/ 3x10 BCS (2)**
9113	**Decal sheets, Chevrolet Blazer (1969 -1972)**
9115	**Door handles, left, right, and rear/ retainers (3)/ windshield wipers, left & right/ retainer (1)/ fuel cap/ fuel flange/ fuel cap mount/ 1.6x5 BCS (self-tapping) (7)/ 2.6x8 BCS (1)**
9123	**Grille, Chevrolet Blazer (1969 - 1970)/ grille retainers (5)/ headlight housing (2)/ headlight lens (2)/ turn signal lens (2)/ hood emblem/ hood emblem mount/ 2.6x8 BCS (5)/ 2.5x6 BCS (4)/ 1.6x5 BCS (self-tapping) (2) (fits #9112 body)**
9116	**Marker light housing (4)/ marker light mount (4)/ marker light lens (red (2), amber (2))/ reverse lens (left & right)/ 1.6x5 BCS (self-tapping) (8)**
9121	**Mirrors, side, chrome (left & right)/ o-rings (4)/ body clips (4) (fits #9112 body)**
9122	**Tail light housing, black (2)/ lens (2)/ retainers (left & right)/ 2.6x8 BCS (self-tapping) (4)**

Body (1972 Chevrolet Blazer)

9111	**Body, Chevrolet Blazer (1972) (clear, requires painting) (includes grille, side mirrors, side trim, door handles, windshield wipers, decals, window masks)**
9111X	**Body, Chevrolet Blazer (1972), complete (blue) (includes grille, side mirrors, door handles, windshield wipers, front & rear bumpers, decals)**
9125	**Bumper pads/ bumper guards (chrome)/ 2.5x10 BCS (4)/ 2.7mm drill bit (fits #9126 or #9127 front bumpers)**
9126	**Bumper, front (chrome)/ bumper mount/ lens (left and right) (2)/ lens mount (left and right) (2)/ 3x10 BCS (2)/ 2.6x6 BCS (4)**
9124	**Bumper, rear (chrome)/ bumper mount/ 3x10 BCS (2)**
9113	**Decal sheets, Chevrolet Blazer (1969 -1972)**
9115	**Door handles, left, right, and rear/ retainers (3)/ windshield wipers, left & right/ retainer (1)/ fuel cap/ fuel flange/ fuel cap mount/ 1.6x5 BCS (self-tapping) (7)/ 2.6x8 BCS (1)**
9120	**Grille, Chevrolet Blazer (1972)/ grille retainers (5)/ headlight housing (2)/ lens (2)/ 2.6x8 BCS (5)/ 2.5x6 BCS (4) (fits #9111 body)**
9116	**Marker light housing (4)/ marker light mount (4)/ marker light lens (red (2), amber (2))/ reverse lens (left & right)/ 1.6x5 BCS (self-tapping) (8)**
9118	**Mirrors, side, chrome (left & right)/ o-rings (4)/ body clips (4) (fits #9111 body)**
9117	**Side trim, Chevrolet Blazer (1972), left & right/ rear trim, upper & lower/ retainers, left, right & rear/ 2.6x8 BCS (23)/ 1.6x5 BCS (self-tapping) (5) (fits #9111 body)**
9119	**Tail light housing, chrome (2)/ lens (2)/ retainers (left & right)/ 2.6x8 BCS (self-tapping) (4)**

Body (1979 Chevrolet Blazer)

8130	**Body, Chevrolet Blazer (1979) (clear, requires painting)/ window masks**
8130G	**Body, Chevrolet Blazer (1979) (orange) (requires grille, side mirrors, door handles, windshield wipers, decals)**
8130A	**Body, Chevrolet Blazer (1979) (red) (requires grille, side mirrors, door handles, windshield wipers, decals)**
8130X	**Body, Chevrolet Blazer (1979), complete (orange) (includes grille, side mirrors, door handles, windshield wipers, front & rear bumpers, decals)**
8130R	**Body, Chevrolet Blazer (1979), complete (red) (includes grille, side mirrors, door handles, windshield wipers, front & rear bumpers, decals)**
8131	**Decal sheet, Chevrolet Blazer (1979)**
8132	**Door handles, left, right & rear tailgate/ windshield wipers, left & right/ retainers (2)/ 1.6x5 BCS (self-tapping) (7) (fits #8130 body)**
8134	**Grille, Chevrolet Blazer (1979)/ grille retainers (4)/ headlight housing (2)/ lens (2)/ 2.6x8 BCS (4)/ 2.5x6 BCS (2) (fits #8130 body)**
8133X	**Mirrors, side (folding) (fits #8130 body)**
8133	**Mirrors, side, chrome (left & right)/ o-rings (4)/ body clips (4) (fits #8130 body)**

8135 Tail lights, left & right (assembled)/ tail light retainers, left & right/ side marker lights (assembled) (2)/ side marker retainers (2)/ mounting tape (2)/ 1.6x5 BCS (self-tapping) (4)/ 2.6x8 BCS (2) (fits #8130 body)

Body (1979 Ford Bronco)

8010 Body, Ford Bronco (1979) (clear, requires painting)/ decals/ window masks/ tailgate panel insert/ adhesive foam tape (2)
8010X Body, Ford Bronco (1979), complete (black) (includes front and rear bumpers, push bar, rear body mount, grille, side mirrors, door handles, windshield wipers, spare tire mount, red and sunset decals) (requires #8072 inner fenders)
8078R Decal sheet, Bronco, red (fits #8010 body)
8075 Door handles, left & right/ windshield wipers, left & right/ retainers (3)/ 1.6x5 BCS (self-tapping) (4) (fits #8010 body)
8070 Grille, Ford Bronco/ grille retainers (6)/ headlight housing (2)/ lens (2)/ 2.6x8 BCS (6)/ 2.5x6 BCS (2) (fits #8010 body)
8073 Mirrors, side, black (left & right)/ retainers (2)/ body clips (4) (fits #8010 body)
8073X Mirrors, side, chrome (left & right)/ retainers (2)/ body clips (4) (fits #8010 body)
8076 Side trim, left & right (chrome)/ retainers/ LED lens/ 2.6x8 BCS (24) (fits #8010 body)
8074 Spare tire mount/ mounting bracket/ spare tire cover/ mounting hardware
8077 Tailgate panel insert (clear, requires painting)/ adhesive foam tape (2) (fits #8010 body)
8071 Tailgate panel/ tail light lens (2) (left & right) (fits #8010 body)

Body (Land Rover Defender)

8011 Body, Land Rover® Defender® (clear, trimmed, requires painting)/ window masks/ decal sheet
8011A Body, Land Rover® Defender®, adventure orange (complete with ExoCage, inner fenders, fuel canisters, and jack)
8011X Body, Land Rover® Defender®, graphite silver (painted)/ decals
8011R Body, Land Rover® Defender®, red (painted)/ decals
8012 Decals, Land Rover® Defender®
8016 ExoCage (complete with assembly hardware; #8015 roof basket sold separately) (fits #8011 body)
8019 Fender brace, inner, front & rear
8017 Fender flares, front & rear (2 each) (fits #8011 or #8211 body)
8018 Fenders, inner, front & rear (2 each)/ rock light covers (8)
8013 Grille, Land Rover® Defender®/ grille mount (3)/ headlight housing (2)/ lens (2)/ headlight mount (2) (fits #8011 body)
8020 Mirrors, side (left & right)/ snorkel/ mounting hardware (fits #8011 body)
8015 Roof basket (requires #8016 ExoCage) (fits #8011 body)
8021 Spare tire mount/ mounting bracket/ screw pins (2)
8014 Tail light housing (2)/ lens (2)/ decals (left & right) (fits #8011 body)

Body (Mercedes-Benz® G 500®)

8811 Body, Mercedes-Benz® G 500® 4x4² (clear, requires painting)/ decals/ window masks (includes rear body post, grille, side mirrors, door handles, & windshield wipers)
8812 Decals, Mercedes-Benz® G 500® 4x4²
8813X Grille, Mercedes-Benz® G 500® 4x4²/ grille mount/ grille insert/ headlight lens (2)/ headlight reflector (2)/ reflector lens (2)/ bumperette front (2)/ bumperette mount (2)/ turn signal housing (2)/ turn signal housing retainer (2)/ turn signal len
8817 Mirrors, side, black (left & right)/ o-rings (4)/ windshield wipers, left, right, & rear/ wiper retainers (2)/ body clips (4)/ 1.6x5 BCS (self-tapping) (3)
8822 Roof visor/ visor retainer/ visor lens (2)/ 2.6x6 BCS (3)/ 3x4 GS (4)
8816X Side marker light housing (2)/ mount (2)/ lens (2)/ 1.6x7 BCS (self-tapping) (2)
8814X Tail light lens (2)/ tail light housing (2)/ tail light housing mount (2)/ reverse lens (2)/ 1.6x5 BCS (4) (left & right)

Body (Tactical Unit)

8211X Body, Tactical Unit, night camo (painted)/ decals
8019 Fender brace, inner, front & rear
8017 Fender flares, front & rear (2 each) (fits #8011 or #8211 body)
8018 Fenders, inner, front & rear (2 each)/ rock light covers (8)
8020 Mirrors, side (left & right)/ snorkel/ mounting hardware (fits #8011 body)
8021 Spare tire mount/ mounting bracket/ screw pins (2)

Body (TRX-4® Sport)

8112 Body with camper, TRX-4® Sport (clear, trimmed, requires painting)/ window masks/ decal sheet
8111R Body, TRX-4® Sport (clear, trimmed, die-cut for LED light kit, requires painting)/ window masks/ decal sheet
8111 Body, TRX-4® Sport (clear, trimmed, requires painting)/ window masks/ decal sheet
8113 Decal sheet, TRX-4® Sport
8120X Expedition rack, complete (includes traction boards, shovel, axe, jack, fire extinguisher, fuel cans, & mounting hardware) (fits #8111 or #8111R body)
8120 Expedition rack/ mounting hardware (fits #8111 or #8111R body)
8116 Grille/ grille retainers (2)/ grille mount/ lens (2)/ 2.5x8 BCS (6) (fits #8111 or #8112 body)
8119 Mirrors, side (left & right)/ snorkel/ mounting hardware (fits #8111 or #8112 body)
8122 Shovel/ axe/ accessory mount/ mounting hardware
8118 Spare tire mount/ mounting hardware
8117 Tailgate panel/ tailgate retainers (2)/ tailgate mount/ tail light lens (2) (left & right)/ 2.5x8 BCS (4) (fits #8111 or #8112 body)
8121X Traction boards, blue/ mounting hardware
8121G Traction boards, green/ mounting hardware
8121A Traction boards, yellow/ mounting hardware
8121 Traction boards/ mounting hardware

Body Accessories

1926 Antenna caps, vinyl (2)/ antenna spool
1726 Antenna, tube (1)/ vinyl antenna cap (1)/ wire retainer (1)
1834 Body clips (12) (standard size)
1834A Body clips, black (12) (standard size)
3934 Body clips, heavy duty (12)
3934A Body clips, heavy duty (black) (12)
8215 Body mounts & posts, front & rear (complete set)
8115 Body posts, front & rear
4915 Body washers, foam adhesive (10)
2514 Decal sheet, racing sponsors
8081 Fender extensions (4)/ 3x8 flat-head screws (24) (requires #8080 narrow inner fenders)
8080 Fenders, inner (narrow), front & rear (2 each)/ rock light covers (8)/ battery plate/ 3x8 flat-head screws (4)
8072 Fenders, inner, front & rear (2 each)/ rock light covers (8)/ battery plate/ 3x8 flat-head screws (4)
9950 Official Team Traxxas® racing decal set (flag logo/ 6-color)

Bumpers & Skidplates

8234 Bumper D-Rings, grey (front or rear)/ 2x12 CS (4)
8234R Bumper D-rings, red (front or rear)/ 2.0x12 CS (4)
8067X Bumper mounts, front & rear/ bumper mount, rear (offset)
8237 Bumper mounts, front & rear/ screw pins (4)
8124 Bumper, front (178mm wide)/ winch/ 2.6x8 BCS (1)
8235 Bumper, front/ winch
8236 Bumper, rear
8125 Bumper, rear (176mm wide)
8238 Skidplate/ lower gear cover

Chassis & Attachments

8215 Body mounts & posts, front & rear (complete set)
8224 Box, receiver (sealed)/ wire cover/ foam pads/ silicone grease/ 3x8 BCS (5)/ 2.5x8 CS (2)
8058 Chassis conversion kit, TRX-4® (long to short wheelbase) (includes rear upper & lower suspension links, front & rear inner fenders, short female half shaft, battery tray, 3x8mm FCS (4))
8057 Chassis conversion kit, TRX-4® (short to long wheelbase) (includes rear upper & lower suspension links, front & rear shock towers, long female half shaft)
8220 Chassis rails, 448mm (steel) (left & right)
8218 Floor pans, left & right
8224X Receiver box cover (for use only with #8224 receiver box & #2260 BEC)/ foam pads/ seals/ silicone grease
8219 Rock sliders, left & right
8225 Seal kit, receiver box (includes o-ring, seals, and silicone grease)
8240X Servo mount, 2-speed/ servo mount, T-Lock/ wire clips
8239 Servo mount, steering/ chassis crossmember
8216 Shock towers, front & rear (left & right)
8226 Tray, battery

Differential Components

8281 Carrier, differential/ differential slider/ T-Lock fork
8280A Differential cover, front or rear (black)
8280X Differential cover, front or rear (chrome-plated)
8280 Differential cover, front or rear (grey)
8280R Differential cover, front or rear (red)
8195 Differential, locking, front and rear (assembled) (includes T-Lock cables and servo)
8282 Gear set, differential (output gears (2), spider gears (4), spider gear shaft (2))
8295 Output drive, transmission or differential (pin retainer (1)/ drive cup (1)/ drive ball (1)/ drive pin (1)/ 3x11 screw pin (1)/ cross pin (black) (1) 3x6 BCS with threadlock (1))

TRX-4 SPORT (82024-4)

8279 Ring gear, differential/ pinion gear, differential
8279R Ring gear, differential/ pinion gear, differential (machined)
8287 Ring gear, differential/ pinion gear, differential (overdrive, machined)
8288 Ring gear, differential/ pinion gear, differential (underdrive, machined)
8297 Spool/ differential housing plug/ e-clip

Driveline Components

8250 Half shafts, center (internal splined, front (2) & internal splined, rear (2)/ external splined (2)/ pin retainer (4)) (plastic parts only)
8255 Stub axle (portal drive) (2)
8255A Stub axle, extended (portal drive) (2)
8269 Wheel hubs, 12mm hex (2)/ stub axle pins (2) (steel)
8269X Wheel hubs, 12mm hex, 6061-T6 aluminum (blue-anodized) (4)/ screw pin (4)
8269A Wheel hubs, 12mm hex, 6061-T6 aluminum (charcoal gray-anodized) (4)/ screw pin (4)
8269G Wheel hubs, 12mm hex, 6061-T6 aluminum (green-anodized) (4)/ screw pin (4)
8269R Wheel hubs, 12mm hex, 6061-T6 aluminum (red-anodized) (4)/ screw pin (4)

Hardware

1552 Backplate screws (3x8mm cap-head machine) (6)/washers (6)/ wrench
1834 Body clips (12) (standard size)
1834A Body clips, black (12) (standard size)
3934 Body clips, heavy duty (12)
3934A Body clips, heavy duty (black) (12)
8167X Hardware kit, stainless steel, beadlock rings (contains stainless steel hardware for 4 wheels)
8298 Hardware kit, stainless steel, TRX-4® (contains all stainless steel hardware used on TRX-4)
8151 Hardware kit, stainless steel, TRX-4® High Lift Kit (contains all stainless steel hardware used on TRX-4® Long Arm Lift Kit)
5476X Hex wrenches; 1.5mm, 2mm, 2.5mm, 3mm, 2.5mm ball
3647 Nuts, 4mm flanged nylon locking (steel, serrated) (8)
8347 Nuts, 4mm flanged nylon locking, serrated (black) (10)
1747R Nuts, aluminum, flanged, serrated (4mm) (blue-anodized) (4)
1747G Nuts, aluminum, flanged, serrated (4mm) (green-anodized) (4)
1747P Nuts, aluminum, flanged, serrated (4mm) (pink-anodized) (4)
1985 PTFE-coated washers, 5x8x0.5mm (20) (use with ball bearings)
8221 Screw pin, 3x10mm (6)
3229 Screws, 2.5x10mm cap-head machine (hex drive) (6)
2523 Screws, 2.5x10mm countersunk machine (hex drive) (6)
3236 Screws, 2.5x12mm cap-head machine (6)
2618 Screws, 2.5x16mm cap-head machine (6)
3215 Screws, 2.5x6mm cap-head machine (hex drive) (6)
2617 Screws, 2.5x8mm button-head machine (hex drive) (6)
3965 Screws, 2.5x8mm cap-head machine (6)
2524 Screws, 2.5x8mm countersunk machine (hex drive) (6)
8299 Screws, 2.6x12mm button-head, self-tapping (hex drive) (6)
8167 Screws, 2x10mm cap-head, self-tapping (hex drive) (10)
2564 Screws, 2x8mm cap-head machine (hex drive) (6)
2577 Screws, 3x10mm button-head machine (hex drive) (6)
4859 Screws, 3x10mm flat-head machine (hex drive) (4)
2578 Screws, 3x12mm button-head machine (hex drive) (6)
2579 Screws, 3x15mm button-head machine (hex drive) (6)
2591 Screws, 3x23mm button-head machine (hex drive) (6)
2581 Screws, 3x25mm button-head machine (hex drive) (6)
2616 Screws, 3x27mm button-head machine (hex drive) (6)
2582 Screws, 3x30mm button-head machine (hex drive) (6)
2575 Screws, 3x6mm button-head machine (hex drive) (6)
3932 Screws, 3x6mm flat-head machine (hex drive) (6)
2576 Screws, 3x8mm button-head machine (hex drive) (6)
3931 Screws, 3x8mm flat-head machine (hex drive) (6)
3933 Screws, 4x16mm button-head machine (hex drive) (6)

LED Light Accessories

8031 3-in-1 wire harness, LED light kit
8089 4-in-2 wire harness, LED light kit
8028 LED lights, power supply (regulated, 3V, 0.5-amp)/ 3-in-1 wire harness
8026X LED rock light kit, TRX-4®/TRX-6™ (requires #8028 power supply and #8018, #8072, or #8080 inner fenders)

LED Lights (1969-1972 Chevrolet Blazer)

8090 LED light set, complete with power supply (contains headlights, tail lights, side marker lights, & distribution block) (fits #9111 or 9112 body)

LED Lights (1979 Chevrolet Blazer)

8039 LED light set (contains headlights, tail lights, side marker lights, distribution block (fits #8130 body, requires #8028 power supply)
8038 LED light set, complete with power supply (contains headlights, tail lights, side marker lights, distribution block, and power supply) (fits #8130 body)

LED Lights (1979 Ford Bronco)

8036 LED light set (contains headlights, tail lights, side marker lights, & distribution block) (fits #8010 body, requires #8028 power supply)
8035 LED light set, complete with power supply (contains headlights, tail lights, side marker lights, & distribution block) (fits #8010 body)
8037 LED lights, high/low switch (for #8035 or #8036 LED light kits)

LED Lights (Land Rover Defender)

8027 LED headlight/tail light kit (fits #8011 body, requires #8028 power supply)
8025 LED light bar (Rigid®), TRX-4 (requires #8028 power supply)
8029 LED light bar kit (Rigid®)/power supply, TRX-4®
8030 LED light set, complete (contains rock light kit, LED light bar (Rigid®), LED headlight/tail light kit, power supply, & 3-in-1 wire harness) (fits #8011 body)

LED Lights (Mercedes-Benz® G 500® 4x4²)

8899 LED light set (contains headlights, tail lights, roof lights, and distribution block) (fits #8811 or #8825 body, requires #8028 power supply)
8898 LED light set, complete with power supply (contains headlights, tail lights, roof lights, & distribution block) (fits #8811 or #8825 body)

LED Lights (TRX-4® Sport)

8086 LED expedition rack scene light kit (fits #8111 body, requires #8028 power supply)
8084 LED headlight/tail light kit (fits #8111 or #8112 body, requires #8028 power supply)
8088 LED light bar, front bumper (fits #8124 front bumper, requires #8028 power supply)
8087 LED light bar, roof lights (fits #8111 body, requires #8028 power supply)
8085 LED light set, complete with power supply (contains headlights, tail lights, & distribution block) (fits #8111 or #8112 body)

Long Arm Lift Kit

8162X Body, GTS shock, long (aluminum, blue-anodized) (1) (for use with #8140X TRX-4® Long Arm Lift Kit)
8162R Body, GTS shock, long (aluminum, red-anodized) (1) (for use with #8140R TRX-4® Long Arm Lift Kit)
8162 Body, GTS shock, long (silver aluminum) (1) (for use with #8140 TRX-4® Long Arm Lift Kit)
8148 Cable, T-lock (extra long) (for use with TRX-4® Long Arm Lift Kit)
8147 Cable, T-lock (medium) (for use with TRX-4® Long Arm Lift Kit)
8150 Driveshaft extension kit, center (includes internal splined, x-long (2), internal splined, long (1) and internal splined, medium (1)) (for use with TRX-4® Long Arm Lift Kit)
8140 Long Arm Lift Kit, TRX-4®, complete
8140X Long Arm Lift Kit, TRX-4®, complete (includes blue powder coated links, blue-anodized shocks)
8140R Long Arm Lift Kit, TRX-4®, complete (includes red powder coated links, red-anodized shocks)
8149 Rod ends, extended (standard (4), angled (4))/ hollow balls (8) (for use with TRX-4® Long Arm Lift Kit)
8141 Servo mount, steering (for use with TRX-4® Long Arm Lift Kit)
8161 Shock shaft, 3x57mm (GTS) (2) (includes bump stops) (for use with TRX-4® Long Arm Lift Kit)
8160X Shocks, GTS, aluminum (blue-anodized) (assembled without springs) (4) (for use with #8140X TRX-4® Long Arm Lift Kit)
8160R Shocks, GTS, aluminum (red-anodized) (assembled without springs) (4) (for use with #8140R TRX-4® Long Arm Lift Kit)
8160 Shocks, GTS, silver aluminum (assembled without springs) (4) (for use with #8140 TRX-4® Long Arm Lift Kit)
8153 Springs, shock, long (natural finish) (GTS) (0.29 rate, white stripe) (for use with TRX-4® Long Arm Lift Kit)
8154 Springs, shock, long (natural finish) (GTS) (0.39 rate, orange stripe) (for use with TRX-4® Long Arm Lift Kit)
8155 Springs, shock, long (natural finish) (GTS) (0.47 rate) (included with TRX-4® Long Arm Lift Kit)
8156 Springs, shock, long (natural finish) (GTS) (0.54 rate, green stripe) (for use with TRX-4® Long Arm Lift Kit)
8157 Springs, shock, long (natural finish) (GTS) (0.62 rate, blue stripe) (for use with TRX-4® Long Arm Lift Kit)

8146X Steering link, 5x117mm (1)/ draglink, 5x60mm (1)/ panhard link, 5x63mm (blue powder coated steel) (assembled with hollow balls) (for use with #8140X TRX-4® Long Arm Lift Kit)
8146R Steering link, 5x117mm (1)/ draglink, 5x60mm (1)/ panhard link, 5x63mm (red powder coated steel) (assembled with hollow balls) (for use with #8140R TRX-4® Long Arm Lift Kit)
8144X Suspension link, front upper, 5x68mm (1) (blue powder coated steel) (assembled with hollow balls) (for use with #8140X TRX-4® Long Arm Lift Kit)
8144R Suspension link, front upper, 5x68mm (1) (red powder coated steel) (assembled with hollow balls) (for use with #8140R TRX-4® Long Arm Lift Kit)
8144 Suspension link, front upper, 5x68mm (1) (steel) (assembled with hollow balls) (for use with #8140 TRX-4® Long Arm Lift Kit)
8143 Suspension links, front lower (2) (5x104mm, steel) (assembled with hollow balls) (for use with #8140 TRX-4® Long Arm Lift Kit)
8143X Suspension links, front lower, blue (2) (5x104mm, powder coated steel) (assembled with hollow balls) (for use with #8140X TRX-4® Long Arm Lift Kit)
8143R Suspension links, front lower, red (2) (5x104mm, powder coated steel) (assembled with hollow balls) (for use with #8140R TRX-4® Long Arm Lift Kit)
8145 Suspension links, rear lower (2) (5x115mm, steel) (assembled with hollow balls) (for use with #8140 TRX-4® Long Arm Lift Kit)
8145X Suspension links, rear lower, blue (2) (5x115mm, powder coated steel) (assembled with hollow balls) (for use with #8140X TRX-4® Long Arm Lift Kit)
8145R Suspension links, rear lower, red (2) (5x115mm, powder coated steel) (assembled with hollow balls) (for use with #8140R TRX-4® Long Arm Lift Kit)
8142 Suspension links, rear upper (2) (5x115mm, steel) (assembled with hollow balls) (for use with #8140 TRX-4® Long Arm Lift Kit)
8142X Suspension links, rear upper, blue (2) (5x115mm, powder coated steel) (assembled with hollow balls) (for use with #8140X TRX-4® Long Arm Lift Kit)
8142R Suspension links, rear upper, red (2) (5x115mm, powder coated steel) (assembled with hollow balls) (for use with #8140R TRX-4® Long Arm Lift Kit)
8172 Tires and wheels, assembled (Method 105 2.2" black chrome beadlock wheels, Canyon Trail 5.3x2.2" tires, foam inserts) (1 left, 1 right)
8181 Tires and wheels, assembled, glued (TRX-4® Sport 2.2" wheels, Canyon Trail 5.3x2.2" tires) (2)
8170 Tires, Canyon Trail 5.3x2.2"/ foam inserts (2)
8171 Wheels, Method 105 2.2" (black chrome, beadlock) (beadlock rings sold separately)
8171A Wheels, Method 105 2.2" (charcoal gray, beadlock) (beadlock rings sold separately)
8180 Wheels, TRX-4® Sport 2.2 (2)

Motors & Electronics

1926 Antenna caps, vinyl (2)/ antenna spool
1726 Antenna, tube (1)/ vinyl antenna cap (1)/ wire retainer (1)
2262 BEC, complete (includes receiver box cover and seals)
2064 Gear set (for 2065 waterproof sub-micro servo)
2064X Gear set, metal (for 2065X waterproof sub-micro servo)
2072X Gear set, metal (for 2070, 2075 servos)
2252 Gear set, metal (for 2250, 2255 servos)
2072R Gear set, metal, high speed (for 2070, 2075 servos)
8290X Motor mount plate, 6061-T6 aluminum (blue-anodized)
8290A Motor mount plate, 6061-T6 aluminum (charcoal gray-anodized)
8290G Motor mount plate, 6061-T6 aluminum (green-anodized)
8290R Motor mount plate, 6061-T6 aluminum (red-anodized)
3975R Motor, Titan® 550, reverse rotation (21-turns/ 14 volts) (1)
8290 Plate, motor/ upper spur gear cover
2254 Servo case, aluminum (blue-anodized) (middle) (for 2250 servo)
2253 Servo case, aluminum (red-anodized) (middle) (for 2255 servo)
2251 Servo case, plastic (top, middle, bottom)/ gaskets/ hardware (for 2250, 2255 servos)
2063 Servo case/gaskets (for 2065 waterproof sub-micro servo)
2063X Servo case/gaskets (for 2065X metal gear, waterproof, sub-micro servo)
5669 Servo horn (with built-in spring and hardware) (for Summit locking differential)
2075R Servo, digital high-speed, metal gear (ball bearing), waterproof
2250 Servo, digital high-torque 330 coreless, metal gear (ball bearing), waterproof (#2262 external BEC and #8247X metal servo horn recommended for optimal performance)
2255 Servo, digital high-torque 400 brushless, metal gear (ball bearing), waterproof (#2262 external BEC and #8247X metal servo horn recommended for optimal performance)
2075X Servo, digital high-torque, metal gear (ball bearing), waterproof
2065 Servo, sub-micro, waterproof
2065X Servo, sub-micro, waterproof, metal gear
3025 XL-5HV 3s Electronic Speed Control, waterproof (low-voltage detection, fwd/rev/brake)
2261 Y-harness, BEC

Radio System, Batteries & Chargers

2849X 4000mAh 11.1v 3-Cell 25C LiPo Battery
2872X 5000mAh 11.1v 3-Cell 25C LiPo Battery
2842X 5000mAh 7.4v 2-Cell 25C LiPo Battery
2843X 5800mAh 7.4v 2-Cell 25C LiPo Battery
2869X 7600mAh 7.4v 2-Cell 25C LiPo Battery
2976 AC to DC converter, 40W
2938X Adapter, Traxxas® iD® LiPo battery (adapts Traxxas iD batteries to separate balance ports)
1726 Antenna, tube (1)/ vinyl antenna cap (1)/ wire retainer (1)
2943 Battery charge indicators (green (4), blue (4), grey (4))
6548 Battery door, transmitter (replacement for #6516, 6517, 6528, 6529, 6530 transmitters)
8222 Battery strap (for 2200 2-cell and 1400 3-cell LiPo batteries)
2914 Battery, Power Cell AA Alkaline (4)
2923X Battery, Power Cell, 3000mAh (NiMH, 7-C flat, 8.4V)
2940X Battery, Series 3 Power Cell, 3300mAh (NiMH, 7-C flat, 8.4V)
2950X Battery, Series 4 Power Cell, 4200mAh (NiMH, 7-C flat, 8.4V)
2960X Battery, Series 5 Power Cell, 5000mAh (NiMH, 7-C flat, 8.4V)
2983 Battery/charger completer pack (includes #2969 2-amp NiMH peak detecting AC charger (1), #2923X 3000mAh 8.4V 7-cell NiMH battery (1))
2992 Battery/charger completer pack (includes #2970 iD® charger (1), #2843X 5800mAh 7.4V 2-cell 25C LiPo battery (1))
2994 Battery/charger completer pack (includes #2970 iD® charger (1), #2849X 4000mAh 11.1v 3-Cell 25C LiPo Battery (1))
2991 Battery/charger completer pack (includes #2972 Dual iD® charger (1), #2869X 7600mAh 7.4V 2-cell 25C LiPo battery (2))
2262 BEC, complete (includes receiver box cover and seals)
2975 Charger, DC, 4 amp (6 - 7 cell, 7.2 - 8.4 volt, NiMH)
2972 Charger, EZ-Peak® Dual, 100W, NiMH/LiPo with iD® Auto Battery Identification
2973 Charger, EZ-Peak® Live Dual, 200W, NiMH/LiPo with iD® Auto Battery Identification
2971 Charger, EZ-Peak® Live, 100W, NiMH/LiPo with iD® Auto Battery Identification
2970 Charger, EZ-Peak® Plus, 4 amp, NiMH/LiPo with iD® Auto Battery Identification
6525 Communication link, telemetry expander
6541 Connector, power tap (with cable) (long)/ wire tie
6512 Cover plate, Traxxas Link™ Wireless Module
2978 Fuse, charger, 5A (2) (for #2974, 2975, 2977)
2064 Gear set (for 2065 waterproof sub-micro servo)
2064X Gear set, metal (for 2065X waterproof sub-micro servo)
2072X Gear set, metal (for 2070, 2075 servos)
2252 Gear set, metal (for 2250, 2255 servos)
2072R Gear set, metal, high speed (for 2070, 2075 servos)
2968X LiPo cell voltage checker/balancer (includes #2938X adapter for Traxxas® iD® batteries)
2968 LiPo cell voltage checker/balancer (requires #2938X adapter for Traxxas® iD® batteries)
6561 Mount, telemetry expander
6535 Mount, temperature sensor (electric motors)/ wire tie/ thermal pad
6519 Receiver, micro, TQ 2.4GHz (3-channel)
6533 Receiver, micro, TQi 2.4GHz with telemetry & TSM (5-channel)
6552 Seal kit, expander box (includes o-ring, seals, and silicone grease)
6526 Sensor, auto-detectable, temperature
6527 Sensor, auto-detectable, voltage
6521 Sensor, temperature and voltage (long)
2254 Servo case, aluminum (blue-anodized) (middle) (for 2250 servo)
2253 Servo case, aluminum (red-anodized) (middle) (for 2255 servo)
2251 Servo case, plastic (top, middle, bottom)/ gaskets/ hardware (for 2250, 2255 servos)
2063 Servo case/gaskets (for 2065 waterproof sub-micro servo)
2063X Servo case/gaskets (for 2065X metal gear, waterproof, sub-micro servo)
2075R Servo, digital high-speed, metal gear (ball bearing), waterproof
2250 Servo, digital high-torque 330 coreless, metal gear (ball bearing), waterproof (#2262 external BEC and #8247X metal servo horn recommended for optimal performance)
2255 Servo, digital high-torque 400 brushless, metal gear (ball bearing), waterproof (#2262 external BEC and #8247X metal servo horn recommended for optimal performance)
2075X Servo, digital high-torque, metal gear (ball bearing), waterproof
2065 Servo, sub-micro, waterproof
2065X Servo, sub-micro, waterproof, metal gear
6553X Telemetry expander 2.0 and GPS module 2.0, TQi radio system

TRX-4 SPORT (82024-4)

6550X	**Telemetry expander 2.0, TQi radio system (for use only with #6551X GPS module)**
6551X	**Telemetry GPS module 2.0, TQi radio system (for use only with #6550X telemetry expander)**
6509R	**TQi 2.4 GHz High Output radio system, 2-channel, Traxxas Link™ enabled, TSM (2-ch transmitter, 5-ch micro receiver)**
6507R	**TQi 2.4 GHz High Output radio system, 4-channel with Traxxas Link™ Wireless Module, TSM (4-ch transmitter, 5-ch micro receiver)**
6516	Transmitter, TQ 2.4GHz, 2-channel (transmitter only)
6530	**Transmitter, TQi Traxxas Link™ enabled, 2.4GHz high output, 4-channel (transmitter only)**
6511	**Traxxas Link™ Wireless Module**
2261	**Y-harness, BEC**

Ready-To-Race Model

82024-4	TRX-4® Sport: 4WD Electric Truck with TQ 2.4GHz Radio System

Scale Details

8120X	**Expedition rack, complete (includes traction boards, shovel, axe, jack, fire extinguisher, fuel cans, & mounting hardware) (fits #8111 or #8111R body)**
8022T	**Fuel canisters (black) (2)/ 3x8 FCS (1)**
8022R	**Fuel canisters (blue) (2)/ 3x8 FCS (1)**
8022	**Fuel canisters (red) (2)/ 3x8 FCS (1)**
8022X	**Fuel canisters (white) (2)/ 3x8 FCS (1)**
8022A	**Fuel canisters (yellow) (2)/ 3x8 FCS (1)**
8023T	**Jack (black) (1)/ 2x8 BCS (1)**
8023	**Jack (red) (1)/ 2x8 BCS (1)**
8122	**Shovel/ axe/ accessory mount/ mounting hardware**
8121X	**Traction boards, blue/ mounting hardware**
8121G	**Traction boards, green/ mounting hardware**
8121A	**Traction boards, yellow/ mounting hardware**
8121	**Traction boards/ mounting hardware**

Shocks (GTS)

8266	Body, GTS shock (aluminum, silver-anodized) (1)
8266X	**Body, GTS shock (hard-anodized, PTFE-coated aluminum) (1)**
8266A	**Body, GTS shock, aluminum (blue-anodized) (1)**
8266G	**Body, GTS shock, aluminum (green-anodized) (1)**
8266R	**Body, GTS shock, aluminum (red-anodized) (1)**
8264	Caps & spring retainers, GTS shocks (upper cap (2)/ hollow balls (4)/ bottom cap (2)/ upper retainer (2)/ lower retainer (2))
8274	**Hollow ball set, complete, TRX-4® (aluminum, PTFE-coated)**
5475	Multi-tool (plastic)
8261	Piston, damper (red) (4)/ e-clips (8)
8262	**Rebuild kit, GTS shocks (x-rings, o-rings, pistons, bushings, e-clips, and rod ends)**
8263	Shock shaft, 3x47mm (GTS) (2)
8263T	**Shock shaft, 3x47mm (GTS) (titanium nitride-coated) (2)**
8260X	**Shocks, GTS hard-anodized, PTFE-coated aluminum bodies with TiN shafts (assembled with spring retainers) (2)**
8260A	**Shocks, GTS, aluminum (blue-anodized) (assembled with spring retainers) (2)**
8260G	**Shocks, GTS, aluminum (green-anodized) (assembled with spring retainers) (2)**
8260R	**Shocks, GTS, aluminum (red-anodized) (assembled with spring retainers) (2)**
8260	Shocks, GTS, silver aluminum (assembled with spring retainers) (2)
1666	Silicone shock oil (30 wt)

Slipper Clutch Components

8292	Input shaft/ output shaft (transmission)
8286	Output shafts (transfer case), front & rear
8254	Rebuild kit, slipper clutch (steel disc (2)/ friction insert (2)/ 4.0mm NL (1)/ spring washers (4), metal washer (1))
8249	**Slipper eliminator plate**

Springs

8042	**Springs, shock (natural finish) (GTS) (0.22 rate, yellow stripe) (2)**
8043	Springs, shock (natural finish) (GTS) (0.30 rate, white stripe) (2)
8044	**Springs, shock (natural finish) (GTS) (0.39 rate, orange stripe) (2)**
8041	**Springs, shock (natural finish) (GTS) (0.45 rate) (2)**
8040	**Springs, shock (natural finish) (GTS) (0.54 rate, green stripe) (2)**
8045	**Springs, shock (natural finish) (GTS) (0.61 rate, blue stripe) (2)**

Spur Gears & Pinion Gears

6746	**Gear, 10-T pinion (32-p) (steel)/ set screw**
6747	**Gear, 11-T pinion (32-p) (steel)/ set screw**
3942X	**Gear, 12-T pinion (32-p), heavy duty (machined, hardened steel)/ set screw**
3943X	**Gear, 13-T pinion (32-p), heavy duty (machined, hardened steel)/ set screw**
3944X	**Gear, 14-T pinion (32-p), heavy duty (machined, hardened steel)/ set screw**
3945X	**Gear, 15-T pinion (32-p), heavy duty (machined, hardened steel)/ set screw**
3946X	**Gear, 16-T pinion (32-p), heavy duty (machined, hardened steel)/ set screw**
3947X	**Gear, 17-T pinion (32-p), heavy duty (machined, hardened steel)/ set screw**
3948X	**Gear, 18-T pinion (32-p), heavy duty (machined, hardened steel)/ set screw**
3949X	**Gear, 19-T pinion (32-p), heavy duty (machined, hardened steel)/ set screw**
3950X	**Gear, 20-T pinion (32-p), heavy duty (machined, hardened steel)/ set screw**
3951X	**Gear, 21-T pinion (32-p), heavy duty (machined, hardened steel)/ set screw**
3952X	**Gear, 22-T pinion (32-p), heavy duty (machined, hardened steel)/ set screw**
6745	**Gear, 9-T pinion (32-p) (steel)/ set screw**
8052	Spur gear, 39-tooth (32-pitch)
8053	**Spur gear, 45-tooth (32-pitch)**

Steering Components

8232	Caster blocks (portal drive), left & right/ kingpin bushings (4)
8232X	**Caster blocks, 6061-T6 aluminum (blue-anodized), left and right**
8232A	**Caster blocks, 6061-T6 aluminum (charcoal gray-anodized), left and right**
8232G	**Caster blocks, 6061-T6 aluminum (green-anodized), left and right**
8232R	**Caster blocks, 6061-T6 aluminum (red-anodized), left and right**
2072X	Gear set, metal (for 2070, 2075 servos)
2072R	**Gear set, metal, high speed (for 2070, 2075 servos)**
8274	**Hollow ball set, complete, TRX-4® (aluminum, PTFE-coated)**
5355	Hollow ball, tall centered (2)/ tall offset hollow ball (2)/ bump steer adjustment shims; 3.5mm (2), 1.17mm (2)
8275	Rod end set, complete (standard (10), angled 10-degrees (8), offset (4))
8276	Rod ends (10)
8277	Rod ends, angled 10-degrees (8)
2742	Rod ends, long (6)/ hollow ball connectors (6)
8278	Rod ends, offset (4)
8247X	Servo horn, steering, metal/ 3x14 BCS (1)
2075R	**Servo, digital high-speed, metal gear (ball bearing), waterproof**
2075X	Servo, digital high-torque, metal gear (ball bearing), waterproof
5529	Shim set, 3x7x1mm (2), 3x6x0.5mm (4), 3x7x2mm (2)/ hollow balls, captured (4)
8246	Steering link, 5x60mm (1)/ draglink, 5x117mm (1) (steel)
8243	Suspension link, front, 5x100mm (lower) (steel) (2)
8244	Suspension link, front, 5x63mm (upper) (steel) (2)
8245	**Suspension link, rear, 5x121mm (upper or lower) (steel) (2)**

Suspension Linkage

8058	**Chassis conversion kit, TRX-4® (long to short wheelbase) (includes rear upper & lower suspension links, front & rear inner fenders, short female half shaft, battery tray, 3x8mm FCS (4))**
8057	**Chassis conversion kit, TRX-4® (short to long wheelbase) (includes rear upper & lower suspension links, front & rear shock towers, long female half shaft)**
8274	**Hollow ball set, complete, TRX-4® (aluminum, PTFE-coated)**
5355	Hollow ball, tall centered (2)/ tall offset hollow ball (2)/ bump steer adjustment shims; 3.5mm (2), 1.17mm (2)
8275	Rod end set, complete (standard (10), angled 10-degrees (8), offset (4))
8276	Rod ends (10)
8277	Rod ends, angled 10-degrees (8)
2742	Rod ends, long (6)/ hollow ball connectors (6)
8278	Rod ends, offset (4)
5529	Shim set, 3x7x1mm (2), 3x6x0.5mm (4), 3x7x2mm (2)/ hollow balls, captured (4)
8243	Suspension link, front, 5x100mm (lower) (steel) (2)
8244	Suspension link, front, 5x63mm (upper) (steel) (2)
8248	Suspension link, rear, 5x109mm (upper or lower) (steel) (2)
8245	**Suspension link, rear, 5x121mm (upper or lower) (steel) (2)**

Team Traxxas Items

2514	**Decal sheet, racing sponsors**
6160X	**DVD, Maxx® Power! Full Throttle Action (sleeve)**
9950	**Official Team Traxxas® racing decal set (flag logo/ 6-color)**
9909	**Traxxas® racing banner, red & black (3x7 feet)**

Tires & Wheels

8169T	**Beadlock rings, black (1.9") (aluminum) (4)/ 2x10 CS (48)**
8168T	**Beadlock rings, black (2.2") (aluminum) (4)/ 2x10 CS (48)**
8169X	**Beadlock rings, blue (1.9") (aluminum) (4)/ 2x10 CS (48)**
8168X	**Beadlock rings, blue (2.2") (aluminum) (4)/ 2x10 CS (48)**

8169G Beadlock rings, green (1.9") (aluminum) (4)/ 2x10 CS (48)
8168G Beadlock rings, green (2.2") (aluminum) (4)/ 2x10 CS (48)
8169A Beadlock rings, orange (1.9") (aluminum) (4)/ 2x10 CS (48)
8168A Beadlock rings, orange (2.2") (aluminum) (4)/ 2x10 CS (48)
8169R Beadlock rings, red (1.9") (aluminum) (4)/ 2x10 CS (48)
8168R Beadlock rings, red (2.2") (aluminum) (4)/ 2x10 CS (48)
8169 Beadlock rings, satin (1.9") (aluminum) (4)/ 2x10 CS (48)
8168 Beadlock rings, satin (2.2") (aluminum) (4)/ 2x10 CS (48)
8176 Center caps, wheel (chrome) (4)/ decal sheet (requires #8255A extended stub axle)
8174 Tires and wheels, assembled (Method 105 1.9" black chrome beadlock wheels, Canyon Trail 4.6x1.9" tires, foam inserts) (1 left, 1 right)
8172 Tires and wheels, assembled (Method 105 2.2" black chrome beadlock wheels, Canyon Trail 5.3x2.2" tires, foam inserts) (1 left, 1 right) (for use with TRX-4 Long Arm Lift Kit)
8166X Tires and wheels, assembled, glued (1.9" chrome wheels, Canyon Trail 4.6x1.9" tires) (4)/ center caps (4)/ decal sheet (requires #8255A extended stub axle)
8166 Tires and wheels, assembled, glued (1.9" chrome wheels, Canyon Trail 4.6x1.9" tires) (2)/ center caps (2)/ decal sheet (requires #8255A extended stub axle)
8177 Tires and wheels, assembled, glued (1.9" chrome wheels, Canyon Trail 4.6x1.9" tires) (2)/ center caps (2)/ decal sheet (requires #8255A extended stub axle)
8183X Tires and wheels, assembled, glued (1.9" classic chrome wheels, Canyon Trail 4.6x1.9" tires) (4)/ center caps (4) (requires #8255A extended stub axle)
8273 Tires and wheels, assembled, glued (Tactical 1.9" wheels, Canyon Trail 4.6x1.9" tires) (2)
8272X Tires and wheels, assembled, glued (TRX-4® 1.9" satin beadlock wheels, Canyon Trail 4.6x1.9" tires) (2)
8272 Tires and wheels, assembled, glued (TRX-4® 1.9" wheels, Canyon Trail 4.6x1.9" tires) (2)
8179 Tires and wheels, assembled, glued (TRX-4® Sport 1.9" wheels, Canyon Trail 4.6x1.9" tires) (2)
8181 Tires and wheels, assembled, glued (TRX-4® Sport 2.2" wheels, Canyon Trail 5.3x2.2" tires) (2) (for use with TRX-4 Long Arm Lift Kit)
8270 Tires, Canyon Trail 4.6x1.9" (S1 compound)/ foam inserts (2)
8170 Tires, Canyon Trail 5.3x2.2"/ foam inserts (2) (for use with TRX-4 Long-Arm Lift Kit)
8269 Wheel hubs, 12mm hex (2)/ stub axle pins (2) (steel)
8269X Wheel hubs, 12mm hex, 6061-T6 aluminum (blue-anodized) (4)/ screw pin (4)
8269A Wheel hubs, 12mm hex, 6061-T6 aluminum (charcoal gray-anodized) (4)/ screw pin (4)
8269G Wheel hubs, 12mm hex, 6061-T6 aluminum (green-anodized) (4)/ screw pin (4)
8269R Wheel hubs, 12mm hex, 6061-T6 aluminum (red-anodized) (4)/ screw pin (4)
8175 Wheels, 1.9", chrome (2)/ center caps (2)/ decal sheet (requires #8255A extended stub axle)
8173 Wheels, Method 105 1.9" (black chrome, beadlock) (beadlock rings sold separately)
8173A Wheels, Method 105 1.9" (charcoal gray, beadlock) (beadlock rings sold separately)
8171 Wheels, Method 105 2.2" (black chrome, beadlock) (beadlock rings sold separately) (for use with TRX-4 Long Arm Lift Kit)
8171A Wheels, Method 105 2.2" (charcoal gray, beadlock) (beadlock rings sold separately) (for use with TRX-4 Long Arm Lift Kit)
8268 Wheels, Tactical 1.9 (2)
8271 Wheels, TRX-4® 1.9 (2)
8271X Wheels, TRX-4® 1.9 (satin beadlock) (2)
8178 Wheels, TRX-4® Sport 1.9 (2)
8180 Wheels, TRX-4 Sport 2.2 (2) (for use with TRX-4 Long Arm Lift Kit)

Transmission Components

8283 Cable, T-lock (front)
8284 Cable, T-lock (rear)
8289 Drive hub, 2-speed/ shift dog/ shift fork/ 2-speed linkage
8293X Gear set, transmission, metal (includes 18T, 30T input gears, 36T output gear, 2x9.8 pins (5))
8291 Gearbox housing (includes main housing, front housing, & cover)
8285 Gears, transfer case (3)
5041 Grease, premium high performance (20cc)
8292 Input shaft/ output shaft (transmission)
8290X Motor mount plate, 6061-T6 aluminum (blue-anodized)
8290A Motor mount plate, 6061-T6 aluminum (charcoal gray-anodized)
8290G Motor mount plate, 6061-T6 aluminum (green-anodized)
8290R Motor mount plate, 6061-T6 aluminum (red-anodized)
8295 Output drive, transmission or differential (pin retainer (1)/ drive cup (1)/ drive ball (1)/ drive pin (1)/ 3x11 screw pin (1)/ cross pin (black) (1) 3x6 BCS with threadlock (1))
8294 Output gear, high range, 24T (metal)
8286 Output shafts (transfer case), front & rear
8290 Plate, motor/ upper spur gear cover
8249 Slipper eliminator plate
8296 Transmission gears, single speed, metal
8196 Two speed conversion kit

Traxxas Tools

3433X Body reamer (aluminum handle)
3433 Body reamer (plastic handle)
3436 Cap, body reamer
3432 Scissors, curved tip
3431 Scissors, straight tip
8712 Speed Bit Essentials Set, hex and nut driver, 7-piece, includes premium handle (medium), travel pouch, hex drivers (straight: 1.5mm, 2.0mm, 2.5mm) and nut drivers (5.0mm, 5.5mm, 7.0mm, and 8.0mm), 1/4" drive
8721 Speed bit handle, medium (one piece)
8720 Speed bit handle, premium, large (rubber overmold)
8722 Speed bit handle, premium, medium (rubber overmold)
8710 Speed Bit Master Set, hex and nut driver, 13-piece, includes premium handle (medium), travel pouch, hex drivers (straight: 1.5mm, 2.0mm, 2.5mm, 3.0mm), (ball-end: 2.0mm, 2.5mm, 3.0mm), and nut drivers (4.00mm, 4.50mm, 5.00mm, 5.50mm, 7.00mm, 8.00mm),
8711 Speed Bit Master Set, hex driver, 7-piece straight and ball end, includes premium handle (medium), travel pouch, hex drivers (straight: 1.5mm, 2.0mm, 2.5mm, 3.0mm) (ball end: 2.0mm, 2.5mm, 3.0mm), 1/4" drive
8719 Speed Bit Master Set, nut driver, 6-piece, includes premium handle (medium), travel pouch, and nut drivers (4.0mm, 4.5mm, 5.0mm, 5.5mm, 7.0mm, 8.0mm), 1/4" drive
8716 Speed Bit Set, hex driver, 2-piece ball-end (2.0mm, 2.5mm), 1/4" drive
8716X Speed Bit Set, hex driver, 3-piece ball-end (2.0mm, 2.5mm, 3.0mm), 1/4" drive
8715 Speed Bit Set, hex driver, 3-piece straight (1.5mm, 2.0mm, 2.5mm), 1/4" drive
8715X Speed Bit Set, hex driver, 4-piece straight (1.5mm, 2.0mm, 2.5mm, 3.0mm), 1/4" drive
3415 Tool set with pouch (includes 1.5mm, 2.0mm, 2.5mm, 3.0mm, 3.5mm, 4mm drivers/ 4mm, 5mm, 5.5mm, 7mm and 8mm nut drivers/ 2mm, 4mm, and 5mm slotted screwdrivers/ #00 Phillips, #0 Phillips, and #1 Phillips screwdrivers/ 4mm and 8mm wrench/ driver handle

TRX-4® Traxx™

8889 Bearing retainers, inner (2), outer (2)
8890 Drive wheel (1)
8885 Shock mounts (frame, left (2), frame, right (2))/ portal mounts (1 each, front (left & right), rear (left & right))
8888 Spring (4)
8887 Stub axle (1)
8886 Stub axle nut (4)
8891 Tension wheels (6)/ road wheels (4)
8881 Traxx™, front, left (assembled) (requires #8886 stub axle, #7061 GTR shock, & #8878 or #8895 rubber track)
8882 Traxx™, front, right (assembled) (requires #8886 stub axle, #7061 GTR shock, & #8878 or #8895 rubber track)
8883 Traxx™, rear, left (assembled) (requires #8886 stub axle, #7061 GTR shock, & #8879 or #8896 rubber track)
8884 Traxx™, rear, right (assembled) (requires #8886 stub axle, #7061 GTR shock, & #8879 or #8896 rubber track)
8880 Traxx™, TRX-4® (4) (complete set, front & rear)
8895 Treads, All-Terrain, TRX-4® Traxx™ (front, left or right) (rubber) (1)
8896 Treads, All-Terrain, TRX-4® Traxx™ (rear, left or right) (rubber) (1)

If you have questions or need technical assistance, call Traxxas at:

1-888-TRAXXAS

(1-888-872-9927) (U.S. residents only)

For orders, calls outside the U.S., and other information, call 972-549-3000, or fax to 972-549-3011 e-mail Traxxas at support@Traxxas.com

TRAXXAS.COM

REV. 201020 0905

TRX-4 EQUIPPED WITH TRAXX™

MODEL 82034-4

4WD ELECTRIC CRAWLER



TQ 2-CHANNEL 2.4GHz TRANSMITTER

TITAN 21T 550 MOTOR AND XL-5 HV ELECTRONIC SPEED CONTROL

GTS ALUMINUM SHOCKS

BEST OF BOTH WORLDS

Hit the trail fully outfitted for fun and adventure with the TRX-4® equipped with Traxx™. Engineered for grip everywhere and ultimate off-road capability, Traxxas elevates this truck higher and wider than any other TRX-4 model. Plus it's factory-equipped with powerful lighting and a full array of performance parts and scale detail accessories. The fully-painted body with clear windows enhances the realism.

TRX-4 Front Assembly

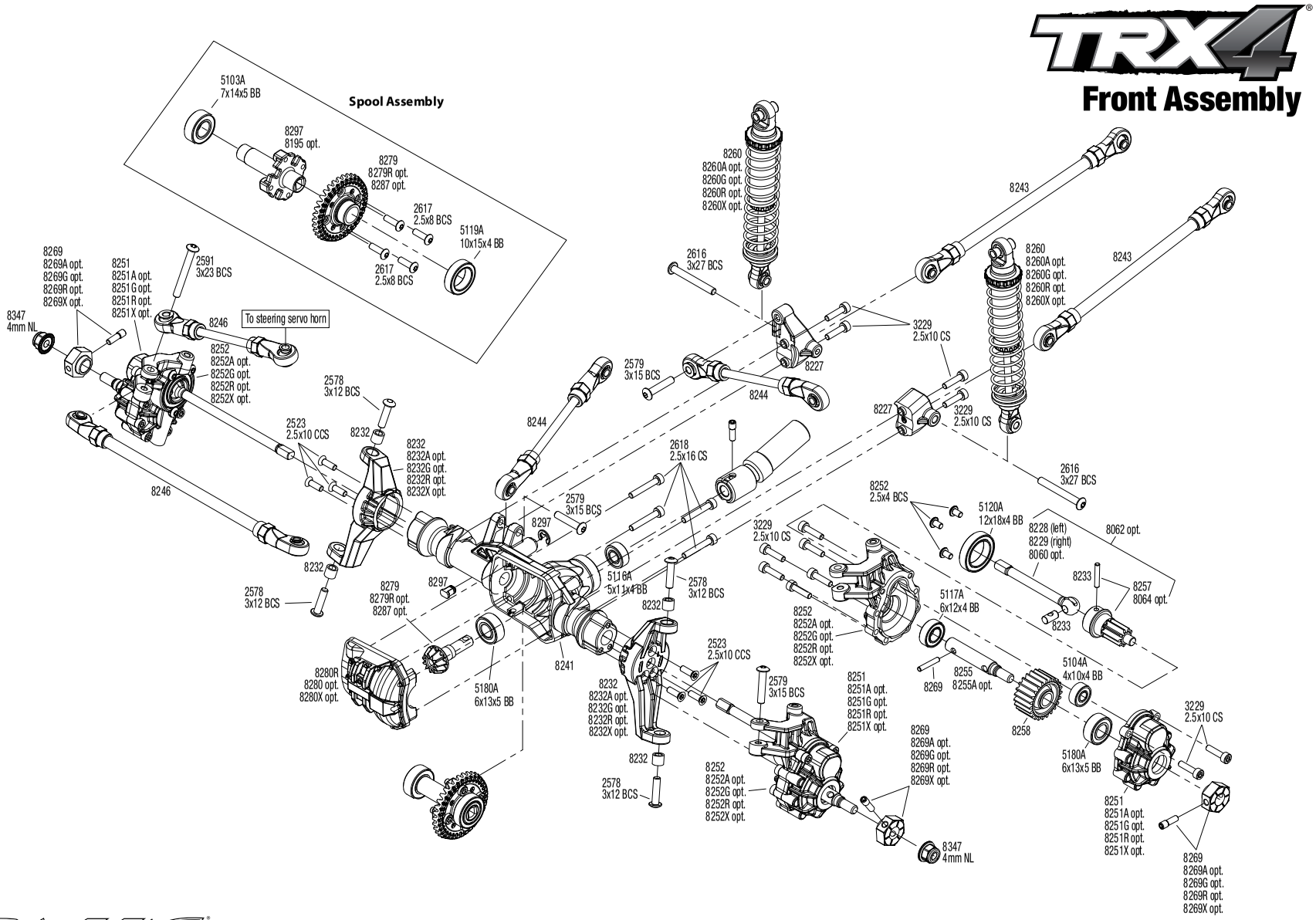

REV 201020-R05

See Parts List for a complete listing of optional accessories.

Specifications on this page are subject to change without notice. Every attempt has been made to ensure the accuracy of this drawing; however, Traxxas cannot be held responsible for typographical or other errors.

TRX-4 SPORT WITH TRAXX (82034-4)

TRAXXAS

TRX4

Rear Assembly

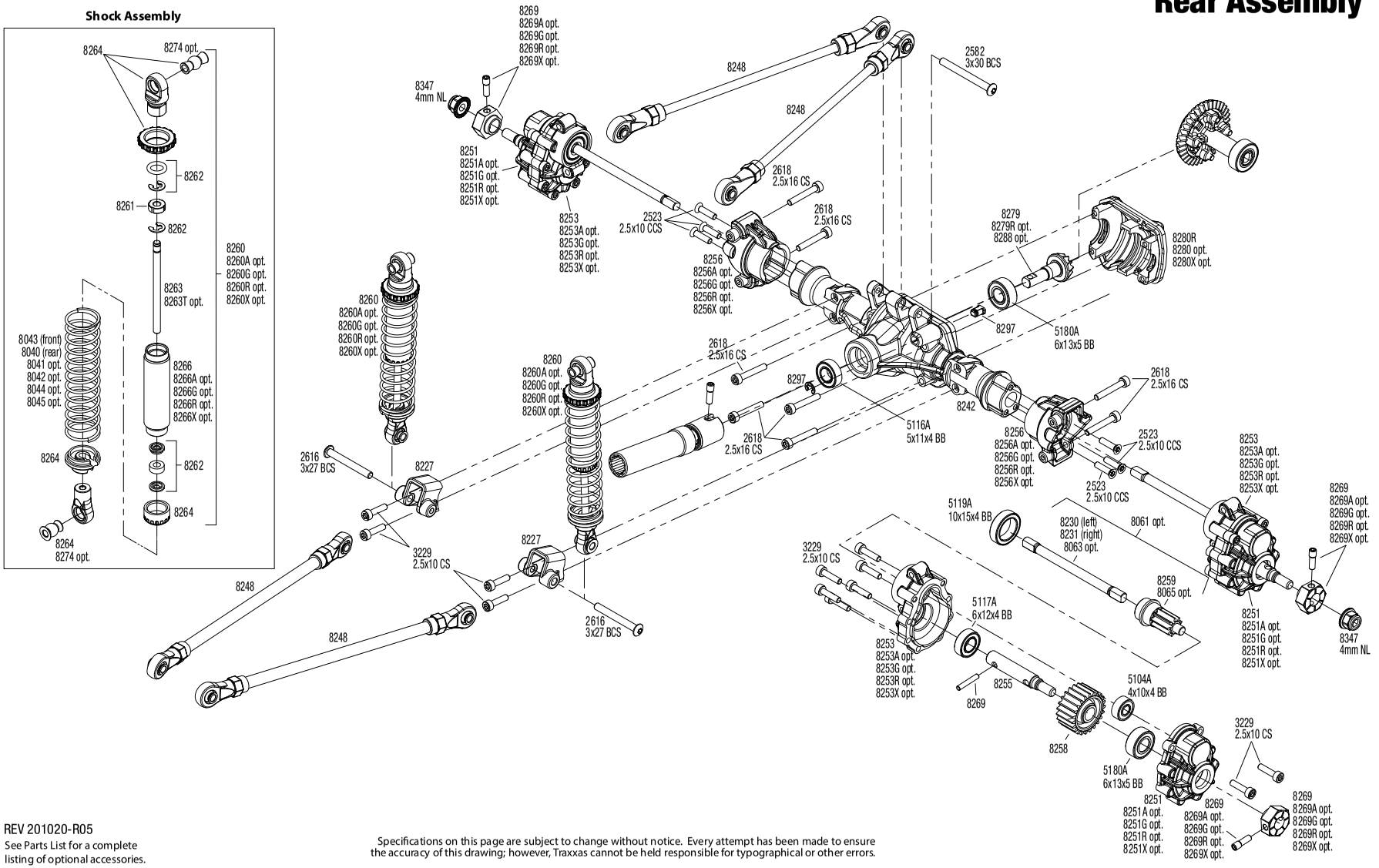

REV 201020-R05

See Parts List for a complete listing of optional accessories.

Specifications on this page are subject to change without notice. Every attempt has been made to ensure the accuracy of this drawing; however, Traxxas cannot be held responsible for typographical or other errors.

TRAXXAS

Optional Two-Speed Transmission Conversion Kit available as part #8196

TRX4 Transmission Assembly

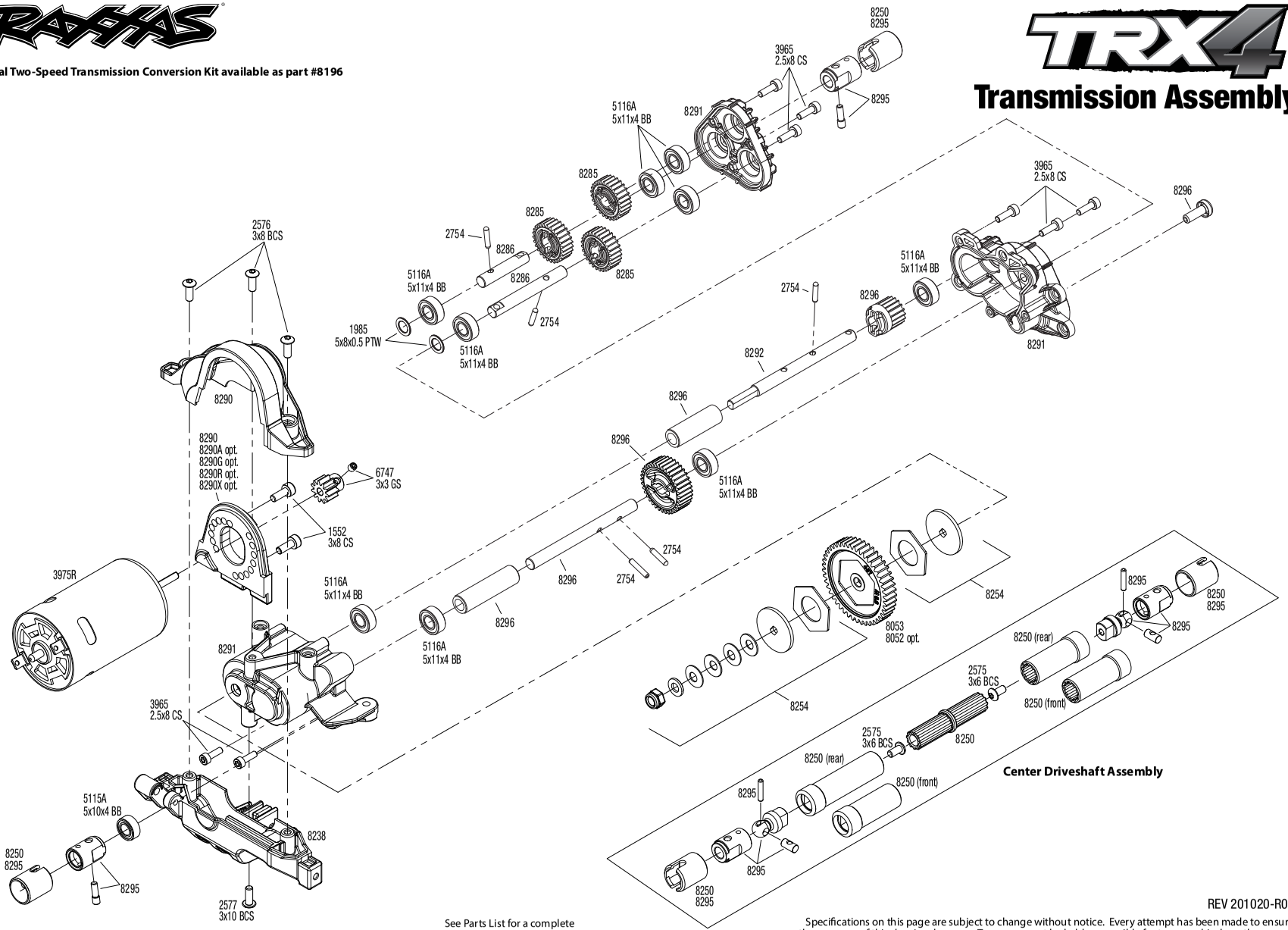

Center Driveshaft Assembly

See Parts List for a complete listing of optional accessories.

REV 201020-R05

Specifications on this page are subject to change without notice. Every attempt has been made to ensure the accuracy of this drawing; however, Traxxas cannot be held responsible for typographical or other errors.

Link Dimensions

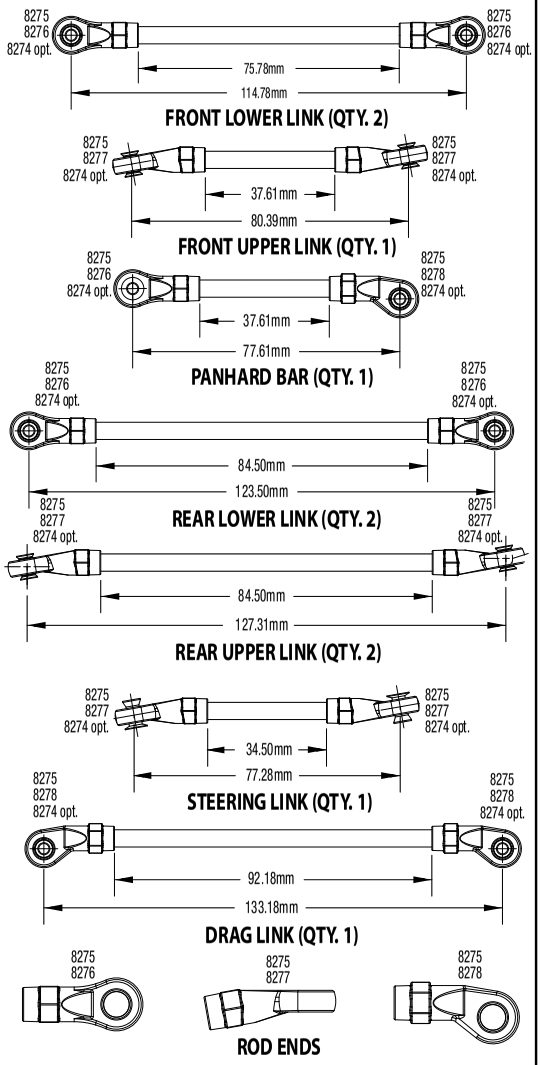

For standard hollow ball replacement, use part #5349.

Modular Assembly

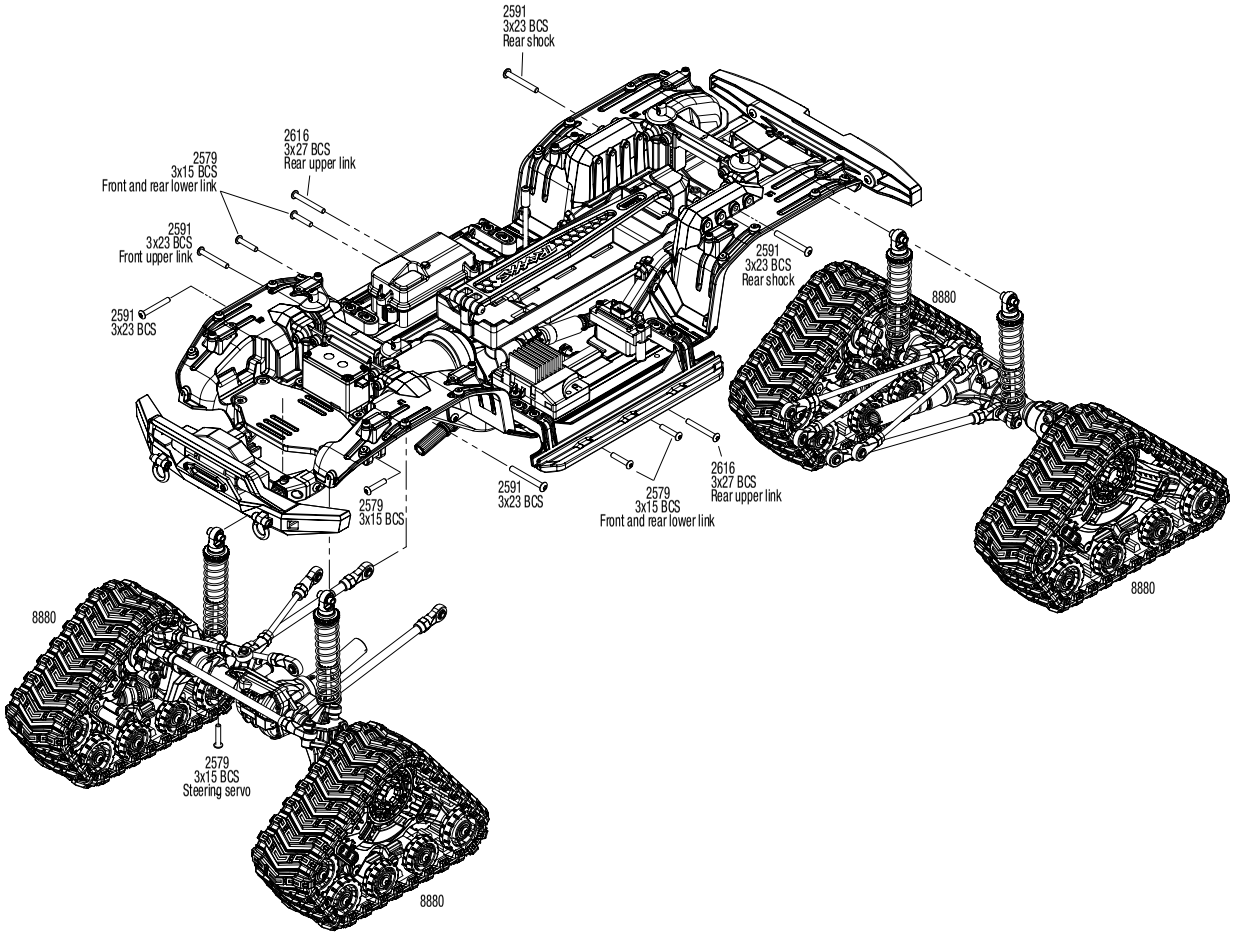

See Parts List for a complete listing of optional accessories.

REV 201020-R05

Specifications on this page are subject to change without notice. Every attempt has been made to ensure the accuracy of this drawing; however, Traxxas cannot be held responsible for typographical or other errors.

Questions? Call toll-free, 1-888-TRAXXAS

TRX4

All-Terrain Traxx™ Assembly

TRAXXAS

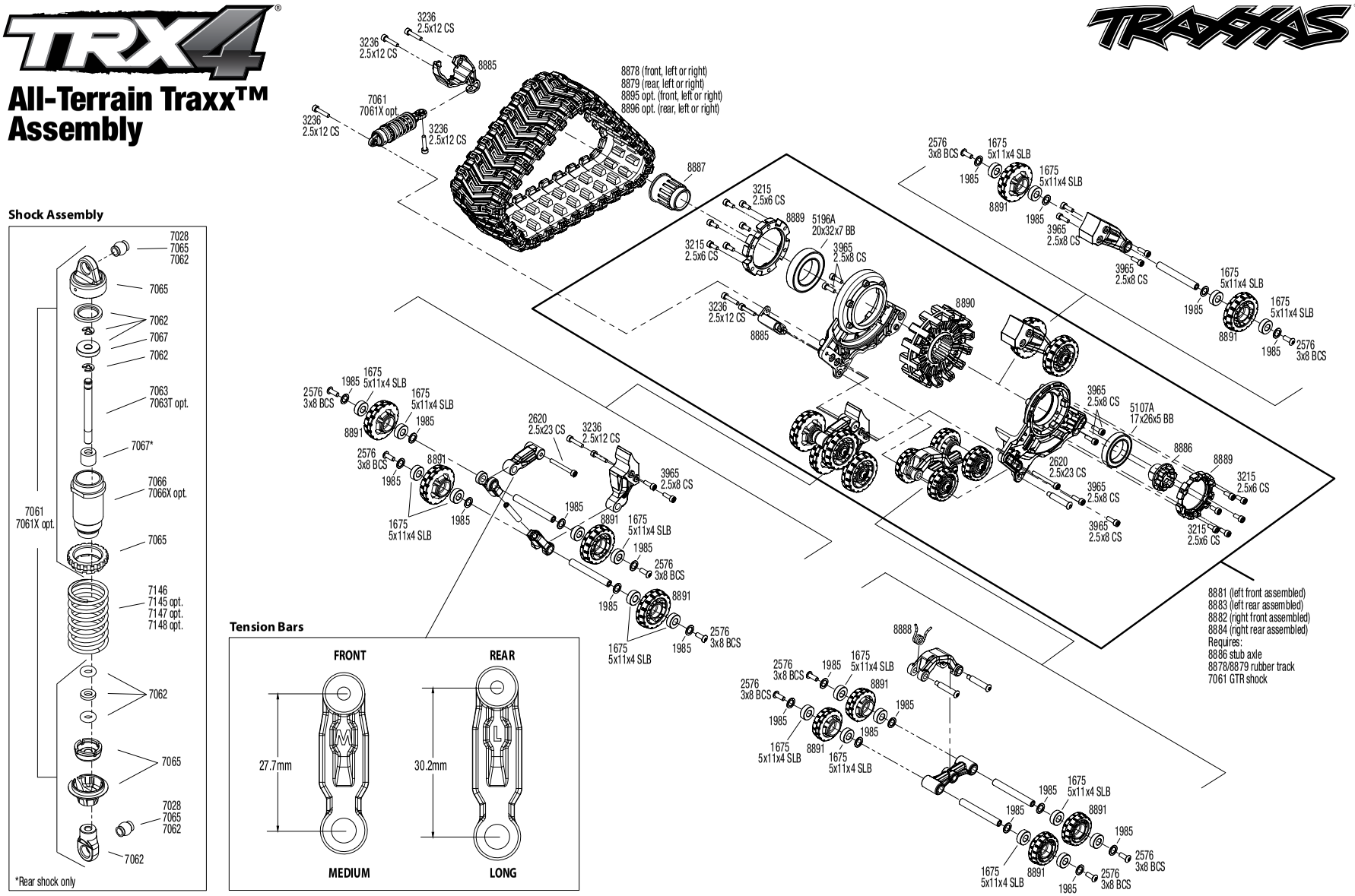

8881 (left front assembled)
8883 (left rear assembled)
8882 (right front assembled)
8884 (right rear assembled)
Requires:
8886 stub axle
8878/8879 rubber track
7061 GTR shock

Shock Assembly

*Rear shock only

Tension Bars

See Parts List for a complete listing of optional accessories.

REV 201020-R05

Specifications on this page are subject to change without notice. Every attempt has been made to ensure the accuracy of this drawing; however, Traxxas cannot be held responsible for typographical or other errors.

Body Assembly

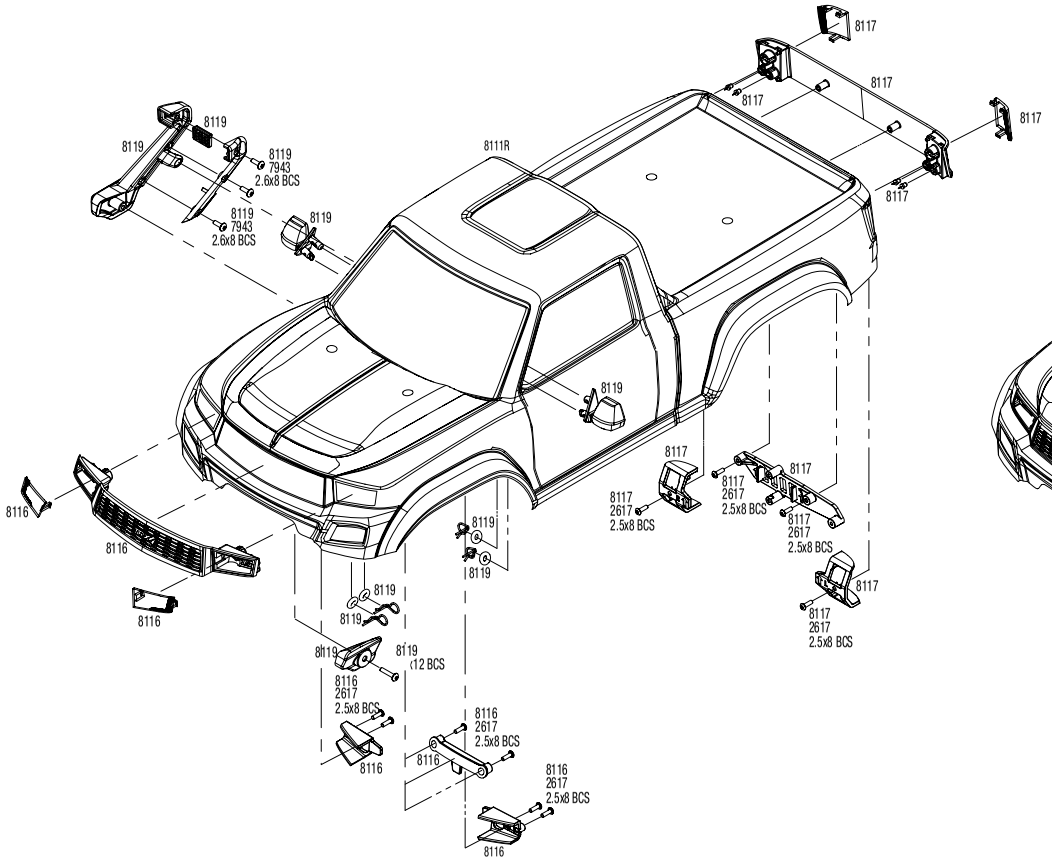

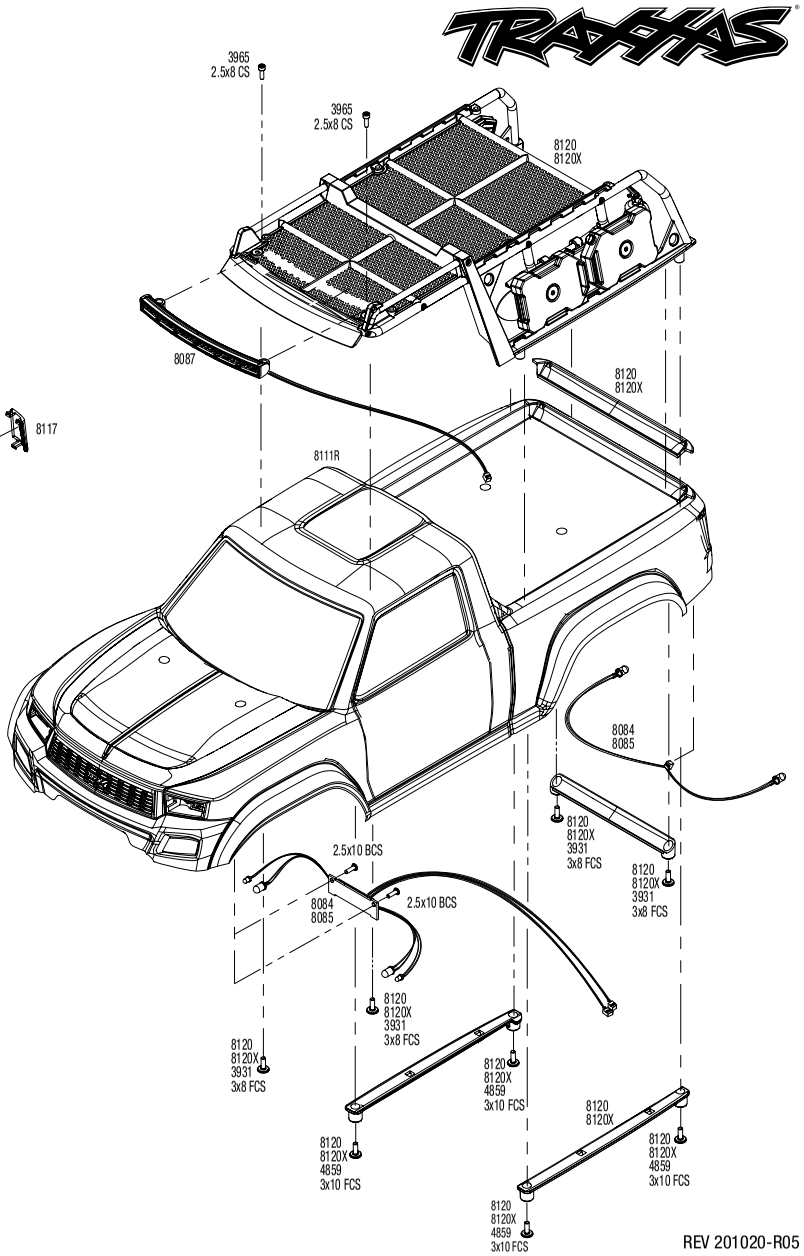

See Parts List for a complete listing of optional accessories.

Specifications on this page are subject to change without notice. Every attempt has been made to ensure the accuracy of this drawing; however, Traxxas cannot be held responsible for typographical or other errors.

REV 201020-R05

TRX-4 SPORT WITH TRAXX (82034-4)

Expedition Rack Assembly

REV 201020-R05

Specifications on this page are subject to change without notice. Every attempt has been made to ensure the accuracy of this drawing; however, Traxxas cannot be held responsible for typographical or other errors.

See Parts List for a complete listing of optional accessories.

Questions? **Call toll-free, 1-888-TRAXXAS**

PARTS SHOWN IN BOLD ARE OPTIONAL ACCESSORIES.

Part categories and individual part listings are arranged alphabetically.

Axle Components

8241 Axle housing, front
8242 Axle housing, intermediate (TRX-6™) or rear (TRX-4®)
8227 Axle mount set (complete) (front & rear) (for suspension links)
8228 Axle shaft, front (left)/ drive pin/ cross pin
8229 Axle shaft, front (right)/ drive pin/ cross pin
8060 Axle shaft, front, heavy duty (left & right) (requires #8064 front portal drive input gear)
8062 Axle shaft, front, heavy duty (left & right)/ portal drive input gear (machined) (2) (assembled)
8230 Axle shaft, rear (left)
8231 Axle shaft, rear (right)
8061 Axle shaft, rear, heavy duty (left & right)/ portal drive input gear, rear (machined)
8063 Axle, rear, heavy duty (left & right) (requires #8065 rear portal drive input gear)
8233 Cross pin (2)/ drive pin (2) (to rebuild front axle shafts)
8256 Portal drive axle mount, rear (left & right)
8256X Portal drive axle mount, rear, 6061-T6 aluminum (blue-anodized) (left and right)/ 2.5x16 CS (4)
8256A Portal drive axle mount, rear, 6061-T6 aluminum (charcoal gray-anodized) (left and right)/ 2.5x16 CS (4)
8256G Portal drive axle mount, rear, 6061-T6 aluminum (green-anodized) (left and right)/ 2.5x16 CS (4)
8256R Portal drive axle mount, rear, 6061-T6 aluminum (red-anodized) (left and right)/ 2.5x16 CS (4)
8252 Portal drive housing, inner, front (left & right)/ 2.5x4 BCS (6)
8253 Portal drive housing, inner, rear (left or right) (2)
8251 Portal drive housing, outer (front or rear) (2)
8064 Portal drive input gear, front (machined) (left or right) (requires #8060 front axle shaft)
8257 Portal drive input gear, front/ drive pin/ cross pin
8259 Portal drive input gear, rear
8065 Portal drive input gear, rear (machined) (left or right) (requires #8063 rear axle)
8258 Portal drive output gear, front or rear
8252X Portal housings, inner (front), 6061-T6 aluminum (blue-anodized) (2)/ 3x12 BCS (2)
8252A Portal housings, inner (front), 6061-T6 aluminum (charcoal gray-anodized) (2)/ 3x12 BCS (2)
8252G Portal housings, inner (front), 6061-T6 aluminum (green-anodized) (2)/ 3x12 BCS (2)
8252R Portal housings, inner (front), 6061-T6 aluminum (red-anodized) (2)/ 3x12 BCS (2)
8253X Portal housings, inner (rear), 6061-T6 aluminum (blue-anodized) (2)/ 2.5x10 CS (2)
8253A Portal housings, inner (rear), 6061-T6 aluminum (charcoal gray-anodized) (2)/ 2.5x10 CS (2)
8253G Portal housings, inner (rear), 6061-T6 aluminum (green-anodized) (2)/ 2.5x10 CS (2)
8253R Portal housings, inner (rear), 6061-T6 aluminum (red-anodized) (2)/ 2.5x10 CS (2)
8251X Portal housings, outer, 6061-T6 aluminum (blue-anodized) (2)/ 2.5x10 CS (12)
8251A Portal housings, outer, 6061-T6 aluminum (charcoal gray-anodized) (2)/ 2.5x10 CS (12)
8251G Portal housings, outer, 6061-T6 aluminum (green-anodized) (2)/ 2.5x10 CS (12)
8251R Portal housings, outer, 6061-T6 aluminum (red-anodized) (2)/ 2.5x10 CS (12)
8255 Stub axle (portal drive) (2)
8255A Stub axle, extended (portal drive) (2)
8267 Weight, portal housing, brass (34 grams) (2)/ 2.5x8 CS (6) (requires #8251X, 8251R, 8251A, or 8251G outer portal housing)

Bearings & Bushings

8892 Ball bearing set, TRX-4® Traxx™, black rubber sealed, stainless (contains 5x11x4 (40), 20x32x7 (2), & 17x26x5 (2) bearings/ 5x11x.5mm PTFE-coated washers (40)) (for 1 pair of front or rear tracks)
5107A Ball bearing, black rubber sealed (17x26x5mm) (2)
5196A Ball bearing, black rubber sealed (20x32x7mm) (2)
5107X Ball bearing, black rubber sealed, stainless (17x26x5) (2)
5196X Ball bearing, black rubber sealed, stainless (20x32x7mm) (2)
5119A Ball bearings, black rubber sealed (10x15x4mm) (2)
5120A Ball bearings, black rubber sealed (12x18x4mm) (2)
5104A Ball bearings, black rubber sealed (4x10x4mm) (2)
5115A Ball bearings, black rubber sealed (5x10x4mm) (2)
5116A Ball bearings, black rubber sealed (5x11x4mm) (2)
5114A Ball bearings, black rubber sealed (5x8x2.5mm) (2)
5117A Ball bearings, black rubber sealed (6x12x4mm) (2)
5180A Ball bearings, black rubber sealed (6x13x5mm) (2)
5103A Ball bearings, black rubber sealed (7x14x5mm) (2)
8889 Bearing retainers, inner (2), outer (2)
1675 Bushings, self-lubricating (5x11x4mm) (14)

Body (1969 Chevrolet Blazer)

9112 Body, Chevrolet Blazer (1969 - 1970) (clear, requires painting) (includes grille, side mirrors, door handles, windshield wipers, decals, window masks)
9112X Body, Chevrolet Blazer (1969), complete (black) (includes grill, side mirrors, door handles, windshield wipers, front & rear bumpers, decals)
9125 Bumper pads/ bumper guards (chrome)/ 2.5x10 BCS (4)/ 2.7mm drill bit (fits #9126 or #9127 front bumpers)
9127 Bumper, front (chrome)/ bumper mount/ 3x10 BCS (2)
9124 Bumper, rear (chrome)/ bumper mount/ 3x10 BCS (2)
9113 Decal sheets, Chevrolet Blazer (1969 -1972)
9115 Door handles, left, right, and rear/ retainers (3)/ windshield wipers, left & right/ retainer (1)/ fuel cap/ fuel flange/ fuel cap mount/ 1.6x5 BCS (self-tapping) (7)/ 2.6x8 BCS (1)
9123 Grille, Chevrolet Blazer (1969 - 1970)/ grille retainers (5)/ headlight housing (2)/ headlight lens (2)/ turn signal lens (2)/ hood emblem/ hood emblem mount/ 2.6x8 BCS (5)/ 2.5x6 BCS (4)/ 1.6x5 BCS (self-tapping) (2) (fits #9112 body)
9116 Marker light housing (4)/ marker light mount (4)/ marker light lens (red (2), amber (2))/ reverse lens (left & right)/ 1.6x5 BCS (self-tapping) (8)
9121 Mirrors, side, chrome (left & right)/ o-rings (4)/ body clips (4) (fits #9112 body)
9122 Tail light housing, black (2)/ lens (2)/ retainers (left & right)/ 2.6x8 BCS (self-tapping) (4)

Body (1972 Chevrolet Blazer)

9111 Body, Chevrolet Blazer (1972) (clear, requires painting) (includes grille, side mirrors, side trim, door handles, windshield wipers, decals, window masks)
9111X Body, Chevrolet Blazer (1972), complete (blue) (includes grille, side mirrors, door handles, windshield wipers, front & rear bumpers, decals)
9125 Bumper pads/ bumper guards (chrome)/ 2.5x10 BCS (4)/ 2.7mm drill bit (fits #9126 or #9127 front bumpers)
9126 Bumper, front (chrome)/ bumper mount/ lens (left and right) (2)/ lens mount (left and right) (2)/ 3x10 BCS (2)/ 2.6x6 BCS (4)
9124 Bumper, rear (chrome)/ bumper mount/ 3x10 BCS (2)
9113 Decal sheets, Chevrolet Blazer (1969 -1972)
9115 Door handles, left, right, and rear/ retainers (3)/ windshield wipers, left & right/ retainer (1)/ fuel cap/ fuel flange/ fuel cap mount/ 1.6x5 BCS (self-tapping) (7)/ 2.6x8 BCS (1)
9120 Grille, Chevrolet Blazer (1972)/ grille retainers (5)/ headlight housing (2)/ lens (2)/ 2.6x8 BCS (5)/ 2.5x6 BCS (4) (fits #9111 body)
9116 Marker light housing (4)/ marker light mount (4)/ marker light lens (red (2), amber (2))/ reverse lens (left & right)/ 1.6x5 BCS (self-tapping) (8)
9118 Mirrors, side, chrome (left & right)/ o-rings (4)/ body clips (4) (fits #9111 body)
9117 Side trim, Chevrolet Blazer (1972), left & right/ rear trim, upper & lower/ retainers, left, right & rear/ 2.6x8 BCS (23)/ 1.6x5 BCS (self-tapping) (5) (fits #9111 body)
9119 Tail light housing, chrome (2)/ lens (2)/ retainers (left & right)/ 2.6x8 BCS (self-tapping) (4)

Body (1979 Chevrolet Blazer)

8130 Body, Chevrolet Blazer (1979) (clear, requires painting)/ window masks
8130G Body, Chevrolet Blazer (1979) (orange) (requires grille, side mirrors, door handles, windshield wipers, decals)
8130A Body, Chevrolet Blazer (1979) (red) (requires grille, side mirrors, door handles, windshield wipers, decals)
8130X Body, Chevrolet Blazer (1979), complete (orange) (includes grille, side mirrors, door handles, windshield wipers, front & rear bumpers, decals)
8130R Body, Chevrolet Blazer (1979), complete (red) (includes grille, side mirrors, door handles, windshield wipers, front & rear bumpers, decals)
8131 Decal sheet, Chevrolet Blazer (1979)

TRX-4 SPORT WITH TRAXX (82034-4)

8132 Door handles, left, right & rear tailgate/ windshield wipers, left & right/ retainers (2)/ 1.6x5 BCS (self-tapping) (7) (fits #8130 body)
8134 Grille, Chevrolet Blazer (1979)/ grille retainers (4)/ headlight housing (2)/ lens (2)/ 2.6x8 BCS (4)/ 2.5x6 BCS (2) (fits #8130 body)
8133X Mirrors, side (folding) (fits #8130 body)
8133 Mirrors, side, chrome (left & right)/ o-rings (4)/ body clips (4) (fits #8130 body)
8135 Tail lights, left & right (assembled)/ tail light retainers, left & right/ side marker lights (assembled) (2)/ side marker retainers (2)/ mounting tape (2)/ 1.6x5 BCS (self-tapping) (4)/ 2.6x8 BCS (2) (fits #8130 body)

Body (1979 Ford Bronco)

8010 Body, Ford Bronco (1979) (clear, requires painting)/ decals/ window masks/ tailgate panel insert/ adhesive foam tape (2)
8010X Body, Ford Bronco (1979), complete (black) (includes front and rear bumpers, push bar, rear body mount, grille, side mirrors, door handles, windshield wipers, spare tire mount, red and sunset decals) (requires #8072 inner fenders)
8078R Decal sheet, Bronco, red (fits #8010 body)
8075 Door handles, left & right/ windshield wipers, left & right/ retainers (3)/ 1.6x5 BCS (self-tapping) (4) (fits #8010 body)
8070 Grille, Ford Bronco/ grille retainers (6)/ headlight housing (2)/ lens (2)/ 2.6x8 BCS (6)/ 2.5x6 BCS (2) (fits #8010 body)
8073 Mirrors, side, black (left & right)/ retainers (2)/ body clips (4) (fits #8010 body)
8073X Mirrors, side, chrome (left & right)/ retainers (2)/ body clips (4) (fits #8010 body)
8076 Side trim, left & right (chrome)/ retainers/ LED lens/ 2.6x8 BCS (24) (fits #8010 body)
8074 Spare tire mount/ mounting bracket/ spare tire cover/ mounting hardware
8077 Tailgate panel insert (clear, requires painting)/ adhesive foam tape (2) (fits #8010 body)
8071 Tailgate panel/ tail light lens (2) (left & right) (fits #8010 body)

Body (Land Rover Defender)

8011 Body, Land Rover® Defender® (clear, trimmed, requires painting)/ window masks/ decal sheet
8011A Body, Land Rover® Defender®, adventure orange (complete with ExoCage, inner fenders, fuel canisters, and jack)
8011X Body, Land Rover® Defender®, graphite silver (painted)/ decals
8011R Body, Land Rover® Defender®, red (painted)/ decals
8012 Decals, Land Rover® Defender®
8016 ExoCage (complete with assembly hardware; #8015 roof basket sold separately) (fits #8011 body)
8019 Fender brace, inner, front & rear
8017 Fender flares, front & rear (2 each) (fits #8011 or #8211 body)
8018 Fenders, inner, front & rear (2 each)/ rock light covers (8)
8013 Grille, Land Rover® Defender®/ grille mount (3)/ headlight housing (2)/ lens (2)/ headlight mount (2) (fits #8011 body)
8020 Mirrors, side (left & right)/ snorkel/ mounting hardware (fits #8011 body)
8015 Roof basket (requires #8016 ExoCage) (fits #8011 body)
8021 Spare tire mount/ mounting bracket/ screw pins (2)
8014 Tail light housing (2)/ lens (2)/ decals (left & right) (fits #8011 body)

Body (Mercedes-Benz® G 500®)

8811 Body, Mercedes-Benz® G 500® 4x4² (clear, requires painting)/ decals/ window masks (includes rear body post, grille, side mirrors, door handles, & windshield wipers)
8812 Decals, Mercedes-Benz® G 500® 4x4²
8813X Grille, Mercedes-Benz® G 500® 4x4²/ grille mount/ grille insert/ headlight lens (2)/ headlight reflector (2)/ reflector lens (2)/ bumperette front (2)/ bumperette mount (2)/ turn signal housing (2)/ turn signal housing retainer (2)/ turn signal len
8817 Mirrors, side, black (left & right)/ o-rings (4)/ windshield wipers, left, right, & rear/ wiper retainers (2)/ body clips (4)/ 1.6x5 BCS (self-tapping) (3)
8822 Roof visor/ visor retainer/ visor lens (2)/ 2.6x6 BCS (3)/ 3x4 GS (4)
8816X Side marker light housing (2)/ mount (2)/ lens (2)/ 1.6x7 BCS (self-tapping) (2)
8814X Tail light lens (2)/ tail light housing (2)/ tail light housing mount (2)/ reverse lens (2)/ 1.6x5 BCS (4) (left & right)

Body (Tactical Unit)

8211X Body, Tactical Unit, night camo (painted)/ decals
8019 Fender brace, inner, front & rear
8017 Fender flares, front & rear (2 each) (fits #8011 or #8211 body)
8018 Fenders, inner, front & rear (2 each)/ rock light covers (8)
8020 Mirrors, side (left & right)/ snorkel/ mounting hardware (fits #8011 body)
8021 Spare tire mount/ mounting bracket/ screw pins (2)

Body (TRX-4® Sport)

8112 Body with camper, TRX-4® Sport (clear, trimmed, requires painting)/ window masks/ decal sheet
8111R Body, TRX-4® Sport (clear, trimmed, die-cut for LED light kit, requires painting)/ window masks/ decal sheet
8111 Body, TRX-4® Sport (clear, trimmed, requires painting)/ window masks/ decal sheet
8113 Decal sheet, TRX-4® Sport
8120X Expedition rack, complete (includes traction boards, shovel, axe, jack, fire extinguisher, fuel cans, & mounting hardware) (fits #8111 or #8111R body)
8120 Expedition rack/ mounting hardware (fits #8111 or #8111R body)
8116 Grille/ grille retainers (2)/ grille mount/ lens (2)/ 2.5x8 BCS (6) (fits #8111 or #8112 body)
8119 Mirrors, side (left & right)/ snorkel/ mounting hardware (fits #8111 or #8112 body)
8122 Shovel/ axe/ accessory mount/ mounting hardware
8118 Spare tire mount/ mounting hardware
8117 Tailgate panel/ tailgate retainers (2)/ tailgate mount/ tail light lens (2) (left & right)/ 2.5x8 BCS (4) (fits #8111 or #8112 body)
8121X Traction boards, blue/ mounting hardware
8121G Traction boards, green/ mounting hardware
8121A Traction boards, yellow/ mounting hardware
8121 Traction boards/ mounting hardware

Body Accessories

1926 Antenna caps, vinyl (2)/ antenna spool
1726 Antenna, tube (1)/ vinyl antenna cap (1)/ wire retainer (1)
1834 Body clips (12) (standard size)
1834A Body clips, black (12) (standard size)
3934 Body clips, heavy duty (12)
3934A Body clips, heavy duty (black) (12)
8215 Body mounts & posts, front & rear (complete set)
8115 Body posts, front & rear
4915 Body washers, foam adhesive (10)
2514 Decal sheet, racing sponsors
8081 Fender extensions (4)/ 3x8 flat-head screws (24) (requires #8080 narrow inner fenders)
8080 Fenders, inner (narrow), front & rear (2 each)/ rock light covers (8)/ battery plate/ 3x8 flat-head screws (4)
8072 Fenders, inner, front & rear (2 each)/ rock light covers (8)/ battery plate/ 3x8 flat-head screws (4)
9950 Official Team Traxxas® racing decal set (flag logo/ 6-color)

Bumpers & Skidplates

8234 Bumper D-Rings, grey (front or rear)/ 2x12 CS (4)
8234R Bumper D-rings, red (front or rear)/ 2.0x12 CS (4)
8067X Bumper mounts, front & rear/ bumper mount, rear (offset)
8237 Bumper mounts, front & rear/ screw pins (4)
8124 Bumper, front (178mm wide)/ winch/ 2.6x8 BCS (1)
8235 Bumper, front/ winch
8236 Bumper, rear
8125 Bumper, rear (176mm wide)
8238 Skidplate/ lower gear cover

Chassis & Attachments

8215 Body mounts & posts, front & rear (complete set)
8224 Box, receiver (sealed)/ wire cover/ foam pads/ silicone grease/ 3x8 BCS (5)/ 2.5x8 CS (2)
8058 Chassis conversion kit, TRX-4® (long to short wheelbase) (includes rear upper & lower suspension links, front & rear inner fenders, short female half shaft, battery tray, 3x8mm FCS (4))
8057 Chassis conversion kit, TRX-4® (short to long wheelbase) (includes rear upper & lower suspension links, front & rear shock towers, long female half shaft)
8220 Chassis rails, 448mm (steel) (left & right)
8218 Floor pans, left & right
8224X Receiver box cover (for use only with #8224 receiver box & #2260 BEC)/ foam pads/ seals/ silicone grease
8219 Rock sliders, left & right
8225 Seal kit, receiver box (includes o-ring, seals, and silicone grease)
8240X Servo mount, 2-speed/ servo mount, T-Lock/ wire clips
8239 Servo mount, steering/ chassis crossmember
8216 Shock towers, front & rear (left & right)
8226 Tray, battery

Differential Components

8281 Carrier, differential/ differential slider/ T-Lock fork
8280A Differential cover, front or rear (black)
8280X Differential cover, front or rear (chrome-plated)
8280 Differential cover, front or rear (grey)
8280R Differential cover, front or rear (red)

8195 **Differential, locking, front and rear (assembled) (includes T-Lock cables and servo)**
8282 **Gear set, differential (output gears (2), spider gears (4), spider gear shaft (2))**
8295 Output drive, transmission or differential (pin retainer (1)/ drive cup (1)/ drive ball (1)/ drive pin (1)/ 3x11 screw pin (1)/ cross pin (black) (1) 3x6 BCS with threadlock (1))
8279 Ring gear, differential/ pinion gear, differential
8279R **Ring gear, differential/ pinion gear, differential (machined)**
8287 **Ring gear, differential/ pinion gear, differential (overdrive, machined)**
8288 **Ring gear, differential/ pinion gear, differential (underdrive, machined)**
8297 Spool/ differential housing plug/ e-clip

Driveline Components

8250 Half shafts, center (internal splined, front (2) & internal splined, rear (2)/ external splined (2)/ pin retainer (4)) (plastic parts only)
8255 Stub axle (portal drive) (2)
8255A **Stub axle, extended (portal drive) (2)**
8269 Wheel hubs, 12mm hex (2)/ stub axle pins (2) (steel)
8269X **Wheel hubs, 12mm hex, 6061-T6 aluminum (blue-anodized) (4)/ screw pin (4)**
8269A **Wheel hubs, 12mm hex, 6061-T6 aluminum (charcoal gray-anodized) (4)/ screw pin (4)**
8269G **Wheel hubs, 12mm hex, 6061-T6 aluminum (green-anodized) (4)/ screw pin (4)**
8269R **Wheel hubs, 12mm hex, 6061-T6 aluminum (red-anodized) (4)/ screw pin (4)**

Hardware

1552 Backplate screws (3x8mm cap-head machine) (6)/washers (6)/ wrench
1834 **Body clips (12) (standard size)**
1834A Body clips, black (12) (standard size)
3934 **Body clips, heavy duty (12)**
3934A **Body clips, heavy duty (black) (12)**
5150 E-clips, 1.5mm (24)
8894 **Hardware kit, black stainless steel, TRX-4® Traxx™ (contains all stainless steel hardware used on #8880 TRX-4® Traxx™)**
8167X **Hardware kit, stainless steel, beadlock rings (contains stainless steel hardware for 4 wheels)**
8298 **Hardware kit, stainless steel, TRX-4® (contains all stainless steel hardware used on TRX-4)**
8151 **Hardware kit, stainless steel, TRX-4® High Lift Kit (contains all stainless steel hardware used on TRX-4® Long Arm Lift Kit)**
5476X **Hex wrenches; 1.5mm, 2mm, 2.5mm, 3mm, 2.5mm ball**
3647 **Nuts, 4mm flanged nylon locking (steel, serrated) (8)**
8347 Nuts, 4mm flanged nylon locking, serrated (black) (10)
1747R **Nuts, aluminum, flanged, serrated (4mm) (blue-anodized) (4)**
1747G **Nuts, aluminum, flanged, serrated (4mm) (green-anodized) (4)**
1747P **Nuts, aluminum, flanged, serrated (4mm) (pink-anodized) (4)**
1985 PTFE-coated washers, 5x8x0.5mm (20) (use with ball bearings)
8221 Screw pin, 3x10mm (6)
3229 Screws, 2.5x10mm cap-head machine (hex drive) (6)
2523 Screws, 2.5x10mm countersunk machine (hex drive) (6)
3236 Screws, 2.5x12mm cap-head machine (6)
2618 Screws, 2.5x16mm cap-head machine (6)
2620 Screws, 2.5x23mm cap-head machine (6)
3215 Screws, 2.5x6mm cap-head machine (hex drive) (6)
2617 Screws, 2.5x8mm button-head machine (hex drive) (6)
3965 Screws, 2.5x8mm cap-head machine (6)
2524 Screws, 2.5x8mm countersunk machine (hex drive) (6)
8299 Screws, 2.6x12mm button-head, self-tapping (hex drive) (6)
8167 Screws, 2x10mm cap-head, self-tapping (hex drive) (10)
2564 Screws, 2x8mm cap-head machine (hex drive) (6)
2577 Screws, 3x10mm button-head machine (hex drive) (6)
4859 Screws, 3x10mm flat-head machine (hex drive) (4)
2578 Screws, 3x12mm button-head machine (hex drive) (6)
2579 Screws, 3x15mm button-head machine (hex drive) (6)
2591 Screws, 3x23mm button-head machine (hex drive) (6)
2581 Screws, 3x25mm button-head machine (hex drive) (6)
2616 Screws, 3x27mm button-head machine (hex drive) (6)
2582 Screws, 3x30mm button-head machine (hex drive) (6)
2575 Screws, 3x6mm button-head machine (hex drive) (6)
3932 Screws, 3x6mm flat-head machine (hex drive) (6)
2576 Screws, 3x8mm button-head machine (hex drive) (6)
3931 Screws, 3x8mm flat-head machine (hex drive) (6)
3933 Screws, 4x16mm button-head machine (hex drive) (6)
8886 Stub axle nut (4)
8891 Tension wheels (6)/ road wheels (4)
5480X Wheel wrench, splined, 17mm

LED Light Accessories

8031 **3-in-1 wire harness, LED light kit**
8089 **4-in-2 wire harness, LED light kit**
8028 **LED lights, power supply (regulated, 3V, 0.5-amp)/ 3-in-1 wire harness**
8026X **LED rock light kit, TRX-4®/TRX-6™ (requires #8028 power supply and #8018, #8072, or #8080 inner fenders)**

LED Lights (1969-1972 Chevrolet Blazer)

8090 **LED light set, complete with power supply (contains headlights, tail lights, side marker lights, & distribution block) (fits #9111 or 9112 body)**

LED Lights (1979 Chevrolet Blazer)

8039 **LED light set (contains headlights, tail lights, side marker lights, distribution block (fits #8130 body, requires #8028 power supply)**
8038 **LED light set, complete with power supply (contains headlights, tail lights, side marker lights, distribution block, and power supply) (fits #8130 body)**

LED Lights (1979 Ford Bronco)

8036 **LED light set (contains headlights, tail lights, side marker lights, & distribution block) (fits #8010 body, requires #8028 power supply)**
8035 **LED light set, complete with power supply (contains headlights, tail lights, side marker lights, & distribution block) (fits #8010 body)**
8037 **LED lights, high/low switch (for #8035 or #8036 LED light kits)**

LED Lights (Land Rover Defender)

8027 **LED headlight/tail light kit (fits #8011 body, requires #8028 power supply)**
8025 **LED light bar (Rigid®), TRX-4 (requires #8028 power supply)**
8029 **LED light bar kit (Rigid®)/power supply, TRX-4®**
8030 **LED light set, complete (contains rock light kit, LED light bar (Rigid®), LED headlight/tail light kit, power supply, & 3-in-1 wire harness) (fits #8011 body)**

LED Lights (Mercedes-Benz® G 500® 4x4²)

8899 **LED light set (contains headlights, tail lights, roof lights, and distribution block) (fits #8811 or #8825 body, requires #8028 power supply)**
8898 **LED light set, complete with power supply (contains headlights, tail lights, roof lights, & distribution block) (fits #8811 or #8825 body)**

LED Lights (TRX-4® Sport)

8086 **LED expedition rack scene light kit (fits #8111 body, requires #8028 power supply)**
8084 LED headlight/tail light kit (fits #8111 or #8112 body, requires #8028 power supply)
8088 **LED light bar, front bumper (fits #8124 front bumper, requires #8028 power supply)**
8087 LED light bar, roof lights (fits #8111 body, requires #8028 power supply)
8085 LED light set, complete with power supply (contains headlights, tail lights, & distribution block) (fits #8111 or #8112 body)

Long Arm Lift Kit

8162X **Body, GTS shock, long (aluminum, blue-anodized) (1) (for use with #8140X TRX-4® Long Arm Lift Kit)**
8162R **Body, GTS shock, long (aluminum, red-anodized) (1) (for use with #8140R TRX-4® Long Arm Lift Kit)**
8162 **Body, GTS shock, long (silver aluminum) (1) (for use with #8140 TRX-4® Long Arm Lift Kit)**
8148 **Cable, T-lock (extra long) (for use with TRX-4® Long Arm Lift Kit)**
8147 **Cable, T-lock (medium) (for use with TRX-4® Long Arm Lift Kit)**
8150 **Driveshaft extension kit, center (includes internal splined, x-long (2), internal splined, long (1) and internal splined, medium (1)) (for use with TRX-4® Long Arm Lift Kit)**
8140 **Long Arm Lift Kit, TRX-4®, complete**
8140X **Long Arm Lift Kit, TRX-4®, complete (includes blue powder coated links, blue-anodized shocks)**
8140R **Long Arm Lift Kit, TRX-4®, complete (includes red powder coated links, red-anodized shocks)**
8149 **Rod ends, extended (standard (4), angled (4))/ hollow balls (8) (for use with TRX-4® Long Arm Lift Kit)**
8141 **Servo mount, steering (for use with TRX-4® Long Arm Lift Kit)**
8161 **Shock shaft, 3x57mm (GTS) (2) (includes bump stops) (for use with TRX-4® Long Arm Lift Kit)**
8160X **Shocks, GTS, aluminum (blue-anodized) (assembled without springs) (4) (for use with #8140X TRX-4® Long Arm Lift Kit)**
8160R **Shocks, GTS, aluminum (red-anodized) (assembled without springs) (4) (for use with #8140R TRX-4® Long Arm Lift Kit)**

TRX-4 SPORT WITH TRAXX (82034-4)

8160	**Shocks, GTS, silver aluminum (assembled without springs) (4) (for use with #8140 TRX-4® Long Arm Lift Kit)**
8153	**Springs, shock, long (natural finish) (GTS) (0.29 rate, white stripe) (for use with TRX-4® Long Arm Lift Kit)**
8154	**Springs, shock, long (natural finish) (GTS) (0.39 rate, orange stripe) (for use with TRX-4® Long Arm Lift Kit)**
8155	**Springs, shock, long (natural finish) (GTS) (0.47 rate) (included with TRX-4® Long Arm Lift Kit)**
8156	**Springs, shock, long (natural finish) (GTS) (0.54 rate, green stripe) (for use with TRX-4® Long Arm Lift Kit)**
8157	**Springs, shock, long (natural finish) (GTS) (0.62 rate, blue stripe) (for use with TRX-4® Long Arm Lift Kit)**
8146X	**Steering link, 5x117mm (1)/ draglink, 5x60mm (1)/ panhard link, 5x63mm (blue powder coated steel) (assembled with hollow balls) (for use with #8140X TRX-4® Long Arm Lift Kit)**
8146R	**Steering link, 5x117mm (1)/ draglink, 5x60mm (1)/ panhard link, 5x63mm (red powder coated steel) (assembled with hollow balls) (for use with #8140R TRX-4® Long Arm Lift Kit)**
8144X	**Suspension link, front upper, 5x68mm (1) (blue powder coated steel) (assembled with hollow balls) (for use with #8140X TRX-4® Long Arm Lift Kit)**
8144R	**Suspension link, front upper, 5x68mm (1) (red powder coated steel) (assembled with hollow balls) (for use with #8140R TRX-4® Long Arm Lift Kit)**
8144	**Suspension link, front upper, 5x68mm (1) (steel) (assembled with hollow balls) (for use with #8140 TRX-4® Long Arm Lift Kit)**
8143	**Suspension links, front lower (2) (5x104mm, steel) (assembled with hollow balls) (for use with #8140 TRX-4® Long Arm Lift Kit)**
8143X	**Suspension links, front lower, blue (2) (5x104mm, powder coated steel) (assembled with hollow balls) (for use with #8140X TRX-4® Long Arm Lift Kit)**
8143R	**Suspension links, front lower, red (2) (5x104mm, powder coated steel) (assembled with hollow balls) (for use with #8140R TRX-4® Long Arm Lift Kit)**
8145	**Suspension links, rear lower (2) (5x115mm, steel) (assembled with hollow balls) (for use with #8140 TRX-4® Long Arm Lift Kit)**
8145X	**Suspension links, rear lower, blue (2) (5x115mm, powder coated steel) (assembled with hollow balls) (for use with #8140X TRX-4® Long Arm Lift Kit)**
8145R	**Suspension links, rear lower, red (2) (5x115mm, powder coated steel) (assembled with hollow balls) (for use with #8140R TRX-4® Long Arm Lift Kit)**
8142	**Suspension links, rear upper (2) (5x115mm, steel) (assembled with hollow balls) (for use with #8140 TRX-4® Long Arm Lift Kit)**
8142X	**Suspension links, rear upper, blue (2) (5x115mm, powder coated steel) (assembled with hollow balls) (for use with #8140X TRX-4® Long Arm Lift Kit)**
8142R	**Suspension links, rear upper, red (2) (5x115mm, powder coated steel) (assembled with hollow balls) (for use with #8140R TRX-4® Long Arm Lift Kit)**
8172	**Tires and wheels, assembled (Method 105 2.2" black chrome beadlock wheels, Canyon Trail 5.3x2.2" tires, foam inserts) (1 left, 1 right)**
8181	**Tires and wheels, assembled, glued (TRX-4® Sport 2.2" wheels, Canyon Trail 5.3x2.2" tires) (2)**
8170	**Tires, Canyon Trail 5.3x2.2"/ foam inserts (2)**
8171	**Wheels, Method 105 2.2" (black chrome, beadlock) (beadlock rings sold separately)**
8171A	**Wheels, Method 105 2.2" (charcoal gray, beadlock) (beadlock rings sold separately)**
8180	**Wheels, TRX-4® Sport 2.2 (2)**

Motors & Electronics

1926	Antenna caps, vinyl (2)/ antenna spool
1726	Antenna, tube (1)/ vinyl antenna cap (1)/ wire retainer (1)
2262	**BEC, complete (includes receiver box cover and seals)**
2064	**Gear set (for 2065 waterproof sub-micro servo)**
2064X	**Gear set, metal (for 2065X waterproof sub-micro servo)**
2072X	Gear set, metal (for 2070, 2075 servos)
2252	**Gear set, metal (for 2250, 2255 servos)**
2072R	**Gear set, metal, high speed (for 2070, 2075 servos)**
8290X	**Motor mount plate, 6061-T6 aluminum (blue-anodized)**
8290A	**Motor mount plate, 6061-T6 aluminum (charcoal gray-anodized)**
8290G	**Motor mount plate, 6061-T6 aluminum (green-anodized)**
8290R	**Motor mount plate, 6061-T6 aluminum (red-anodized)**
3975R	Motor, Titan® 550, reverse rotation (21-turns/ 14 volts) (1)
8290	Plate, motor/ upper spur gear cover
2254	**Servo case, aluminum (blue-anodized) (middle) (for 2250 servo)**
2253	**Servo case, aluminum (red-anodized) (middle) (for 2255 servo)**
2251	**Servo case, plastic (top, middle, bottom)/ gaskets/ hardware (for 2250, 2255 servos)**
2063	**Servo case/gaskets (for 2065 waterproof sub-micro servo)**
2063X	**Servo case/gaskets (for 2065X metal gear, waterproof, sub-micro servo)**
5669	**Servo horn (with built-in spring and hardware) (for Summit locking differential)**
2075R	**Servo, digital high-speed, metal gear (ball bearing), waterproof**
2250	**Servo, digital high-torque 330 coreless, metal gear (ball bearing), waterproof (#2262 external BEC and #8247X metal servo horn recommended for optimal performance)**
2255	**Servo, digital high-torque 400 brushless, metal gear (ball bearing), waterproof (#2262 external BEC and #8247X metal servo horn recommended for optimal performance)**
2075X	Servo, digital high-torque, metal gear (ball bearing), waterproof
2065	**Servo, sub-micro, waterproof**
2065X	**Servo, sub-micro, waterproof, metal gear**
3025	XL-5HV 3s Electronic Speed Control, waterproof (low-voltage detection, fwd/rev/brake)
2261	**Y-harness, BEC**

Radio System, Batteries & Chargers

2849X	**4000mAh 11.1v 3-Cell 25C LiPo Battery**
2872X	**5000mAh 11.1v 3-Cell 25C LiPo Battery**
2842X	**5000mAh 7.4v 2-Cell 25C LiPo Battery**
2843X	**5800mAh 7.4v 2-Cell 25C LiPo Battery**
2869X	**7600mAh 7.4v 2-Cell 25C LiPo Battery**
2976	**AC to DC converter, 40W**
2938X	**Adapter, Traxxas® iD® LiPo battery (adapts Traxxas iD batteries to separate balance ports)**
1726	Antenna, tube (1)/ vinyl antenna cap (1)/ wire retainer (1)
2943	**Battery charge indicators (green (4), blue (4), grey (4))**
6548	Battery door, transmitter (replacement for #6516, 6517, 6528, 6529, 6530 transmitters)
8222	**Battery strap (for 2200 2-cell and 1400 3-cell LiPo batteries)**
2914	**Battery, Power Cell AA Alkaline (4)**
2923X	**Battery, Power Cell, 3000mAh (NiMH, 7-C flat, 8.4V)**
2940X	**Battery, Series 3 Power Cell, 3300mAh (NiMH, 7-C flat, 8.4V)**
2950X	**Battery, Series 4 Power Cell, 4200mAh (NiMH, 7-C flat, 8.4V)**
2960X	**Battery, Series 5 Power Cell, 5000mAh (NiMH, 7-C flat, 8.4V)**
2983	**Battery/charger completer pack (includes #2969 2-amp NiMH peak detecting AC charger (1), #2923X 3000mAh 8.4V 7-cell NiMH battery (1))**
2992	**Battery/charger completer pack (includes #2970 iD® charger (1), #2843X 5800mAh 7.4V 2-cell 25C LiPo battery (1))**
2994	**Battery/charger completer pack (includes #2970 iD® charger (1), #2849X 4000mAh 11.1v 3-Cell 25C LiPo Battery (1))**
2991	**Battery/charger completer pack (includes #2972 Dual iD® charger (1), #2869X 7600mAh 7.4V 2-cell 25C LiPo battery (2))**
2262	**BEC, complete (includes receiver box cover and seals)**
2975	**Charger, DC, 4 amp (6 - 7 cell, 7.2 - 8.4 volt, NiMH)**
2972	**Charger, EZ-Peak® Dual, 100W, NiMH/LiPo with iD® Auto Battery Identification**
2973	**Charger, EZ-Peak® Live Dual, 200W, NiMH/LiPo with iD® Auto Battery Identification**
2971	**Charger, EZ-Peak® Live, 100W, NiMH/LiPo with iD® Auto Battery Identification**
2970	**Charger, EZ-Peak® Plus, 4 amp, NiMH/LiPo with iD® Auto Battery Identification**
6525	**Communication link, telemetry expander**
6541	**Connector, power tap (with cable) (long)/ wire tie**
6512	**Cover plate, Traxxas Link™ Wireless Module**
2978	**Fuse, charger, 5A (2) (for #2974, 2975, 2977)**
2064	**Gear set (for 2065 waterproof sub-micro servo)**
2064X	**Gear set, metal (for 2065X waterproof sub-micro servo)**
2072X	Gear set, metal (for 2070, 2075 servos)
2252	**Gear set, metal (for 2250, 2255 servos)**
2072R	**Gear set, metal, high speed (for 2070, 2075 servos)**
2968X	**LiPo cell voltage checker/balancer (includes #2938X adapter for Traxxas® iD® batteries)**
2968	**LiPo cell voltage checker/balancer (requires #2938X adapter for Traxxas® iD® batteries)**
6561	**Mount, telemetry expander**
6535	**Mount, temperature sensor (electric motors)/ wire tie/ thermal pad**
6519	Receiver, micro, TQ 2.4GHz (3-channel)
6533	**Receiver, micro, TQi 2.4GHz with telemetry & TSM (5-channel)**
6552	**Seal kit, expander box (includes o-ring, seals, and silicone grease)**
6526	**Sensor, auto-detectable, temperature**
6527	**Sensor, auto-detectable, voltage**
6521	**Sensor, temperature and voltage (long)**
2254	**Servo case, aluminum (blue-anodized) (middle) (for 2250 servo)**
2253	**Servo case, aluminum (red-anodized) (middle) (for 2255 servo)**
2251	**Servo case, plastic (top, middle, bottom)/ gaskets/ hardware (for 2250, 2255 servos)**
2063	**Servo case/gaskets (for 2065 waterproof sub-micro servo)**

REV. 201020 0904

2063X	**Servo case/gaskets (for 2065X metal gear, waterproof, sub-micro servo)**
2075R	**Servo, digital high-speed, metal gear (ball bearing), waterproof**
2250	**Servo, digital high-torque 330 coreless, metal gear (ball bearing), waterproof (#2262 external BEC and #8247X metal servo horn recommended for optimal performance)**
2255	**Servo, digital high-torque 400 brushless, metal gear (ball bearing), waterproof (#2262 external BEC and #8247X metal servo horn recommended for optimal performance)**
2075X	Servo, digital high-torque, metal gear (ball bearing), waterproof
2065	**Servo, sub-micro, waterproof**
2065X	**Servo, sub-micro, waterproof, metal gear**
6553X	**Telemetry expander 2.0 and GPS module 2.0, TQi radio system**
6550X	**Telemetry expander 2.0, TQi radio system (for use only with #6551X GPS module)**
6551X	**Telemetry GPS module 2.0, TQi radio system (for use only with #6550X telemetry expander)**
6509R	**TQi 2.4 GHz High Output radio system, 2-channel, Traxxas Link™ enabled, TSM (2-ch transmitter, 5-ch micro receiver)**
6507R	**TQi 2.4 GHz High Output radio system, 4-channel with Traxxas Link™ Wireless Module, TSM (4-ch transmitter, 5-ch micro receiver)**
6516	Transmitter, TQ 2.4GHz, 2-channel (transmitter only)
6530	**Transmitter, TQi Traxxas Link™ enabled, 2.4GHz high output, 4-channel (transmitter only)**
6511	**Traxxas Link™ Wireless Module**
2261	**Y-harness, BEC**

Ready-To-Race Model

82034-4	TRX-4® with All-Terrain Traxx™: 4WD Electric Truck with TQ 2.4GHz Radio System

Scale Details

8120X	Expedition rack, complete (includes traction boards, shovel, axe, jack, fire extinguisher, fuel cans, & mounting hardware) (fits #8111 or #8111R body)
8022T	**Fuel canisters (black) (2)/ 3x8 FCS (1)**
8022R	**Fuel canisters (blue) (2)/ 3x8 FCS (1)**
8022	**Fuel canisters (red) (2)/ 3x8 FCS (1)**
8022X	**Fuel canisters (white) (2)/ 3x8 FCS (1)**
8022A	**Fuel canisters (yellow) (2)/ 3x8 FCS (1)**
8023T	**Jack (black) (1)/ 2x8 BCS (1)**
8023	**Jack (red) (1)/ 2x8 BCS (1)**
8122	Shovel/ axe/ accessory mount/ mounting hardware
8121X	**Traction boards, blue/ mounting hardware**
8121G	**Traction boards, green/ mounting hardware**
8121A	**Traction boards, yellow/ mounting hardware**
8121	Traction boards/ mounting hardware

Shocks (GTR)

7066X	**Body, GTR shock (hard-anodized, PTFE-coated aluminum) (1)**
7066	Body, GTR shock (molded composite) (2)
7065	Caps and spring retainers, GTR shock (upper cap (2)/ hollow balls (4)/ bottom cap (2)/ upper retainer (2)/ lower retainer (2))
7028	Hollow balls (20)
7067	Piston, damper (2x0.5mm hole, red) (4)/ travel limiters (4)
7062	Rebuild kit, GTR composite shocks (x-rings, bladders, pistons, e-clips, shock rod ends, hollow balls) (renews 2 shocks)
7063	Shaft, GTR shock (2)
7063T	**Shaft, GTR shock (TiN-coated) (4)**
8885	Shock mounts (frame, left (2), frame, right (2))/ portal mounts (1 each, front (left & right), rear (left & right))
7061	Shocks, GTR composite (assembled, without springs) (2)
7061X	**Shocks, GTR hard anodized, PTFE-coated bodies with TiN shafts (fully assembled, without springs) (4)**
7145	**Spring, shock (GTR) (1.76 rate, orange) (1 pair)**
7146	Spring, shock (GTR) (1.92 rate, green) (1 pair)
7147	**Spring, shock (GTR) (2.06 rate, tan) (1 pair)**
7148	**Spring, shock (GTR) (2.22 rate, black) (1 pair)**

Shocks (GTS)

8266	Body, GTS shock (aluminum, silver-anodized) (1)
8266X	**Body, GTS shock (hard-anodized, PTFE-coated aluminum) (1)**
8266A	**Body, GTS shock, aluminum (blue-anodized) (1)**
8266G	**Body, GTS shock, aluminum (green-anodized) (1)**
8266R	**Body, GTS shock, aluminum (red-anodized) (1)**
8264	Caps & spring retainers, GTS shocks (upper cap (2)/ hollow balls (4)/ bottom cap (2)/ upper retainer (2)/ lower retainer (2))
8274	**Hollow ball set, complete, TRX-4® (aluminum, PTFE-coated)**
5475	Multi-tool (plastic)
8261	Piston, damper (red) (4)/ e-clips (8)
8262	**Rebuild kit, GTS shocks (x-rings, o-rings, pistons, bushings, e-clips, and rod ends)**
8263	Shock shaft, 3x47mm (GTS) (2)
8263T	**Shock shaft, 3x47mm (GTS) (titanium nitride-coated) (2)**
8260X	**Shocks, GTS hard-anodized, PTFE-coated aluminum bodies with TiN shafts (assembled with spring retainers) (2)**
8260A	**Shocks, GTS, aluminum (blue-anodized) (assembled with spring retainers) (2)**
8260G	**Shocks, GTS, aluminum (green-anodized) (assembled with spring retainers) (2)**
8260R	**Shocks, GTS, aluminum (red-anodized) (assembled with spring retainers) (2)**
8260	Shocks, GTS, silver aluminum (assembled with spring retainers) (2)
1666	Silicone shock oil (30 wt)

Slipper Clutch Components

8292	Input shaft/ output shaft (transmission)
8286	Output shafts (transfer case), front & rear
8254	Rebuild kit, slipper clutch (steel disc (2)/ friction insert (2)/ 4.0mm NL (1)/ spring washers (4), metal washer (1))
8249	**Slipper eliminator plate**

Springs

8042	**Springs, shock (natural finish) (GTS) (0.22 rate, yellow stripe) (2)**
8043	Springs, shock (natural finish) (GTS) (0.30 rate, white stripe) (2)
8044	**Springs, shock (natural finish) (GTS) (0.39 rate, orange stripe) (2)**
8041	**Springs, shock (natural finish) (GTS) (0.45 rate) (2)**
8040	Springs, shock (natural finish) (GTS) (0.54 rate, green stripe) (2)
8045	**Springs, shock (natural finish) (GTS) (0.61 rate, blue stripe) (2)**

Spur Gears & Pinion Gears

6746	**Gear, 10-T pinion (32-p) (steel)/ set screw**
6747	Gear, 11-T pinion (32-p) (steel)/ set screw
3942X	**Gear, 12-T pinion (32-p), heavy duty (machined, hardened steel)/ set screw**
3943X	**Gear, 13-T pinion (32-p), heavy duty (machined, hardened steel)/ set screw**
3944X	**Gear, 14-T pinion (32-p), heavy duty (machined, hardened steel)/ set screw**
3945X	**Gear, 15-T pinion (32-p), heavy duty (machined, hardened steel)/ set screw**
3946X	**Gear, 16-T pinion (32-p), heavy duty (machined, hardened steel)/ set screw**
3947X	**Gear, 17-T pinion (32-p), heavy duty (machined, hardened steel)/ set screw**
3948X	**Gear, 18-T pinion (32-p), heavy duty (machined, hardened steel)/ set screw**
3949X	**Gear, 19-T pinion (32-p), heavy duty (machined, hardened steel)/ set screw**
3950X	**Gear, 20-T pinion (32-p), heavy duty (machined, hardened steel)/ set screw**
3951X	**Gear, 21-T pinion (32-p), heavy duty (machined, hardened steel)/ set screw**
3952X	**Gear, 22-T pinion (32-p), heavy duty (machined, hardened steel)/ set screw**
6745	**Gear, 9-T pinion (32-p) (steel)/ set screw**
8052	**Spur gear, 39-tooth (32-pitch)**
8053	Spur gear, 45-tooth (32-pitch)

Steering Components

8232	Caster blocks (portal drive), left & right/ kingpin bushings (4)
8232X	**Caster blocks, 6061-T6 aluminum (blue-anodized), left and right**
8232A	**Caster blocks, 6061-T6 aluminum (charcoal gray-anodized), left and right**
8232G	**Caster blocks, 6061-T6 aluminum (green-anodized), left and right**
8232R	**Caster blocks, 6061-T6 aluminum (red-anodized), left and right**
2072X	Gear set, metal (for 2070, 2075 servos)
2072R	**Gear set, metal, high speed (for 2070, 2075 servos)**
8274	**Hollow ball set, complete, TRX-4® (aluminum, PTFE-coated)**
5355	Hollow ball, tall centered (2)/ tall offset hollow ball (2)/ bump steer adjustment shims; 3.5mm (2), 1.17mm (2)
8275	Rod end set, complete (standard (10), angled 10-degrees (8), offset (4))
8276	Rod ends (10)
8277	Rod ends, angled 10-degrees (8)
2742	Rod ends, long (6)/ hollow ball connectors (6)
8278	Rod ends, offset (4)
8247X	Servo horn, steering, metal/ 3x14 BCS (1)
2075R	**Servo, digital high-speed, metal gear (ball bearing), waterproof**
2075X	Servo, digital high-torque, metal gear (ball bearing), waterproof
5529	Shim set, 3x7x1mm (2), 3x6x0.5mm (4), 3x7x2mm (2)/ hollow balls, captured (4)
8246	Steering link, 5x60mm (1)/ draglink, 5x117mm (1) (steel)
8243	Suspension link, front, 5x100mm (lower) (steel) (2)
8244	Suspension link, front, 5x63mm (upper) (steel) (2)
8245	**Suspension link, rear, 5x121mm (upper or lower) (steel) (2)**

TRX-4 SPORT WITH TRAXX (82034-4)

Suspension Linkage

8058	**Chassis conversion kit, TRX-4® (long to short wheelbase) (includes rear upper & lower suspension links, front & rear inner fenders, short female half shaft, battery tray, 3x8mm FCS (4))**
8057	**Chassis conversion kit, TRX-4® (short to long wheelbase) (includes rear upper & lower suspension links, front & rear shock towers, long female half shaft)**
8274	**Hollow ball set, complete, TRX-4® (aluminum, PTFE-coated)**
5355	Hollow ball, tall centered (2)/ tall offset hollow ball (2)/ bump steer adjustment shims; 3.5mm (2), 1.17mm (2)
8275	Rod end set, complete (standard (10), angled 10-degrees (8), offset (4))
8276	Rod ends (10)
8277	Rod ends, angled 10-degrees (8)
2742	Rod ends, long (6)/ hollow ball connectors (6)
8278	Rod ends, offset (4)
5529	Shim set, 3x7x1mm (2), 3x6x0.5mm (4), 3x7x2mm (2)/ hollow balls, captured (4)
8243	Suspension link, front, 5x100mm (lower) (steel) (2)
8244	Suspension link, front, 5x63mm (upper) (steel) (2)
8248	Suspension link, rear, 5x109mm (upper or lower) (steel) (2)
8245	**Suspension link, rear, 5x121mm (upper or lower) (steel) (2)**

Team Traxxas Items

2514	**Decal sheet, racing sponsors**
6160X	**DVD, Maxx® Power! Full Throttle Action (sleeve)**
9950	**Official Team Traxxas® racing decal set (flag logo/ 6-color)**
9909	**Traxxas® racing banner, red & black (3x7 feet)**

Tires & Wheels

8169T	**Beadlock rings, black (1.9") (aluminum) (4)/ 2x10 CS (48)**
8168T	**Beadlock rings, black (2.2") (aluminum) (4)/ 2x10 CS (48)**
8169X	**Beadlock rings, blue (1.9") (aluminum) (4)/ 2x10 CS (48)**
8168X	**Beadlock rings, blue (2.2") (aluminum) (4)/ 2x10 CS (48)**
8169G	**Beadlock rings, green (1.9") (aluminum) (4)/ 2x10 CS (48)**
8168G	**Beadlock rings, green (2.2") (aluminum) (4)/ 2x10 CS (48)**
8169A	**Beadlock rings, orange (1.9") (aluminum) (4)/ 2x10 CS (48)**
8168A	**Beadlock rings, orange (2.2") (aluminum) (4)/ 2x10 CS (48)**
8169R	**Beadlock rings, red (1.9") (aluminum) (4)/ 2x10 CS (48)**
8168R	**Beadlock rings, red (2.2") (aluminum) (4)/ 2x10 CS (48)**
8169	**Beadlock rings, satin (1.9") (aluminum) (4)/ 2x10 CS (48)**
8168	**Beadlock rings, satin (2.2") (aluminum) (4)/ 2x10 CS (48)**
8176	**Center caps, wheel (chrome) (4)/ decal sheet (requires #8255A extended stub axle)**
8174	**Tires and wheels, assembled (Method 105 1.9" black chrome beadlock wheels, Canyon Trail 4.6x1.9" tires, foam inserts) (1 left, 1 right)**
8172	**Tires and wheels, assembled (Method 105 2.2" black chrome beadlock wheels, Canyon Trail 5.3x2.2" tires, foam inserts) (1 left, 1 right) (for use with TRX-4 Long Arm Lift Kit)**
8166X	**Tires and wheels, assembled, glued (1.9" chrome wheels, Canyon Trail 4.6x1.9" tires) (4)/ center caps (4)/ decal sheet (requires #8255A extended stub axle)**
8166	**Tires and wheels, assembled, glued (1.9" chrome wheels, Canyon Trail 4.6x1.9" tires) (2)/ center caps (2)/ decal sheet (requires #8255A extended stub axle)**
8177	**Tires and wheels, assembled, glued (1.9" chrome wheels, Canyon Trail 4.6x1.9" tires) (2)/ center caps (2)/ decal sheet (requires #8255A extended stub axle)**
8183X	**Tires and wheels, assembled, glued (1.9" classic chrome wheels, Canyon Trail 4.6x1.9" tires) (4)/ center caps (4) (requires #8255A extended stub axle)**
8273	**Tires and wheels, assembled, glued (Tactical 1.9" wheels, Canyon Trail 4.6x1.9" tires) (2)**
8272X	**Tires and wheels, assembled, glued (TRX-4® 1.9" satin beadlock wheels, Canyon Trail 4.6x1.9" tires) (2)**
8272	**Tires and wheels, assembled, glued (TRX-4® 1.9" wheels, Canyon Trail 4.6x1.9" tires) (2)**
8179	**Tires and wheels, assembled, glued (TRX-4® Sport 1.9" wheels, Canyon Trail 4.6x1.9" tires) (2)**
8181	**Tires and wheels, assembled, glued (TRX-4® Sport 2.2" wheels, Canyon Trail 5.3x2.2" tires) (2) (for use with TRX-4 Long Arm Lift Kit)**
8270	**Tires, Canyon Trail 4.6x1.9" (S1 compound)/ foam inserts (2)**
8170	**Tires, Canyon Trail 5.3x2.2"/ foam inserts (2) (for use with TRX-4 Long-Arm Lift Kit)**
8269	Wheel hubs, 12mm hex (2)/ stub axle pins (2) (steel)
8269X	**Wheel hubs, 12mm hex, 6061-T6 aluminum (blue-anodized) (4)/ screw pin (4)**
8269A	**Wheel hubs, 12mm hex, 6061-T6 aluminum (charcoal gray-anodized) (4)/ screw pin (4)**
8269G	**Wheel hubs, 12mm hex, 6061-T6 aluminum (green-anodized) (4)/ screw pin (4)**
8269R	**Wheel hubs, 12mm hex, 6061-T6 aluminum (red-anodized) (4)/ screw pin (4)**
8175	**Wheels, 1.9", chrome (2)/ center caps (2)/ decal sheet (requires #8255A extended stub axle)**
8173	**Wheels, Method 105 1.9" (black chrome, beadlock) (beadlock rings sold separately)**
8173A	**Wheels, Method 105 1.9" (charcoal gray, beadlock) (beadlock rings sold separately)**
8171	**Wheels, Method 105 2.2" (black chrome, beadlock) (beadlock rings sold separately) (for use with TRX-4 Long Arm Lift Kit)**
8171A	**Wheels, Method 105 2.2" (charcoal gray, beadlock) (beadlock rings sold separately) (for use with TRX-4 Long Arm Lift Kit)**
8268	**Wheels, Tactical 1.9 (2)**
8271	**Wheels, TRX-4® 1.9 (2)**
8271X	**Wheels, TRX-4® 1.9 (satin beadlock) (2)**
8178	**Wheels, TRX-4® Sport 1.9 (2)**
8180	**Wheels, TRX-4 Sport 2.2 (2) (for use with TRX-4 Long Arm Lift Kit)**

Transmission Components

8283	**Cable, T-lock (front)**
8284	**Cable, T-lock (rear)**
8289	**Drive hub, 2-speed/ shift dog/ shift fork/ 2-speed linkage**
8293X	**Gear set, transmission, metal (includes 18T, 30T input gears, 36T output gear, 2x9.8 pins (5))**
8291	Gearbox housing (includes main housing, front housing, & cover)
8285	Gears, transfer case (3)
5041	Grease, premium high performance (20cc)
8292	**Input shaft/ output shaft (transmission)**
8290X	**Motor mount plate, 6061-T6 aluminum (blue-anodized)**
8290A	**Motor mount plate, 6061-T6 aluminum (charcoal gray-anodized)**
8290G	**Motor mount plate, 6061-T6 aluminum (green-anodized)**
8290R	**Motor mount plate, 6061-T6 aluminum (red-anodized)**
8295	Output drive, transmission or differential (pin retainer (1)/ drive cup (1)/ drive ball (1)/ drive pin (1)/ 3x11 screw pin (1)/ cross pin (black) (1) 3x6 BCS with threadlock (1))
8294	**Output gear, high range, 24T (metal)**
8286	Output shafts (transfer case), front & rear
8290	Plate, motor/ upper spur gear cover
8249	**Slipper eliminator plate**
8296	Transmission gears, single speed, metal
8196	**Two speed conversion kit**

Traxxas Tools

3433X	**Body reamer (aluminum handle)**
3433	**Body reamer (plastic handle)**
3436	**Cap, body reamer**
3432	**Scissors, curved tip**
3431	**Scissors, straight tip**
8712	**Speed Bit Essentials Set, hex and nut driver, 7-piece, includes premium handle (medium), travel pouch, hex drivers (straight: 1.5mm, 2.0mm, 2.5mm) and nut drivers (5.0mm, 5.5mm, 7.0mm, and 8.0mm), 1/4" drive**
8721	**Speed bit handle, medium (one piece)**
8720	**Speed bit handle, premium, large (rubber overmold)**
8722	**Speed bit handle, premium, medium (rubber overmold)**
8710	**Speed Bit Master Set, hex and nut driver, 13-piece, includes premium handle (medium), travel pouch, hex drivers (straight: 1.5mm, 2.0mm, 2.5mm, 3.0mm), (ball-end: 2.0mm, 2.5mm, 3.0mm), and nut drivers (4.00mm, 4.50mm, 5.00mm, 5.50mm, 7.00mm, 8.00mm),**
8711	**Speed Bit Master Set, hex driver, 7-piece straight and ball end, includes premium handle (medium), travel pouch, hex drivers (straight: 1.5mm, 2.0mm, 2.5mm, 3.0mm) (ball end: 2.0mm, 2.5mm, 3.0mm), 1/4" drive**
8719	**Speed Bit Master Set, nut driver, 6-piece, includes premium handle (medium), travel pouch, and nut drivers (4.0mm, 4.5mm, 5.0mm, 5.5mm, 7.0mm, 8.0mm), 1/4" drive**
8716	**Speed Bit Set, hex driver, 2-piece ball-end (2.0mm, 2.5mm), 1/4" drive**
8716X	**Speed Bit Set, hex driver, 3-piece ball-end (2.0mm, 2.5mm, 3.0mm), 1/4" drive**
8715	**Speed Bit Set, hex driver, 3-piece straight (1.5mm, 2.0mm, 2.5mm), 1/4" drive**
8715X	**Speed Bit Set, hex driver, 4-piece straight (1.5mm, 2.0mm, 2.5mm, 3.0mm), 1/4" drive**
3415	**Tool set with pouch (includes 1.5mm, 2.0mm, 2.5mm, 3.0mm, 3.5mm, 4mm drivers/ 4mm, 5mm, 5.5mm, 7mm and 8mm nut drivers/ 2mm, 4mm, and 5mm slotted screwdrivers/ #00 Phillips, #0 Phillips, and #1 Phillips screwdrivers/ 4mm and 8mm wrench/ driver handle**
5480X	Wheel wrench, splined, 17mm

TRX-4® Traxx™

8889	Bearing retainers, inner (2), outer (2)
8890	Drive wheel (1)
8885	Shock mounts (frame, left (2), frame, right (2))/ portal mounts (1 each, front (left & right), rear (left & right))
8888	Spring (4)
8887	Stub axle (1)
8886	Stub axle nut (4)
8891	Tension wheels (6)/ road wheels (4)
8881	Traxx™, front, left (assembled) (requires #8886 stub axle, #7061 GTR shock, & #8878 or #8895 rubber track)
8882	Traxx™, front, right (assembled) (requires #8886 stub axle, #7061 GTR shock, & #8878 or #8895 rubber track)
8883	Traxx™, rear, left (assembled) (requires #8886 stub axle, #7061 GTR shock, & #8879 or #8896 rubber track)
8884	Traxx™, rear, right (assembled) (requires #8886 stub axle, #7061 GTR shock, & #8879 or #8896 rubber track)
8880	Traxx™, TRX-4® (4) (complete set, front & rear)
8895	**Treads, All-Terrain, TRX-4® Traxx™ (front, left or right) (rubber) (1)**
8896	**Treads, All-Terrain, TRX-4® Traxx™ (rear, left or right) (rubber) (1)**
8878	Treads, Deep-Terrain, TRX-4® Traxx™ (front, left or right) (rubber) (1)
8879	Treads, Deep-Terrain, TRX-4® Traxx™ (rear, left or right) (rubber) (1)

If you have questions or need technical assistance, call Traxxas at:

1-888-TRAXXAS

(1-888-872-9927) (U.S. residents only)

For orders, calls outside the U.S., and other information, call 972-549-3000, or fax to 972-549-3011 e-mail Traxxas at support@Traxxas.com

TRAXXAS.COM

BRONCO RANGER XLT

TRX-4®

MODEL 82046-4

4WD ELECTRIC
SCALE & TRAIL™ CRAWLER



TQi 2.4GHz TRANSMITTER

TITAN 21T 550 MOTOR AND XL-5 HV ELECTRONIC SPEED CONTROL

GTS ALUMINUM SHOCKS

Official Licensed Product

All other copyrights or trademarks are the property of their respective owners and are being used under license.

Ford Motor Company Trademarks and Trade Dress used under license to Traxxas.

TAKE THE PATH LESS TRAVELED

The Traxxas TRX-4® Scale and Trail™ crawler is an all-new Traxxas design that is loaded with innovation that instantly obsoletes the status quo with exciting new features, versatility, and capability. In other words, we built it the Traxxas way, rugged, powerful, and ready for fun!

Underneath the authentic scale look is a machine built for extreme off-road capability that takes you to new places and new adventures. Exclusive portal axles deliver maximum ground clearance that dramatically turns "no way" into "no problem." Whether you are enjoying outdoor trails or getting technical on the rocks, the remote-locking front and rear differentials and high/low range transmission provide unmatched driving versatility.

TRX4 Front Assembly

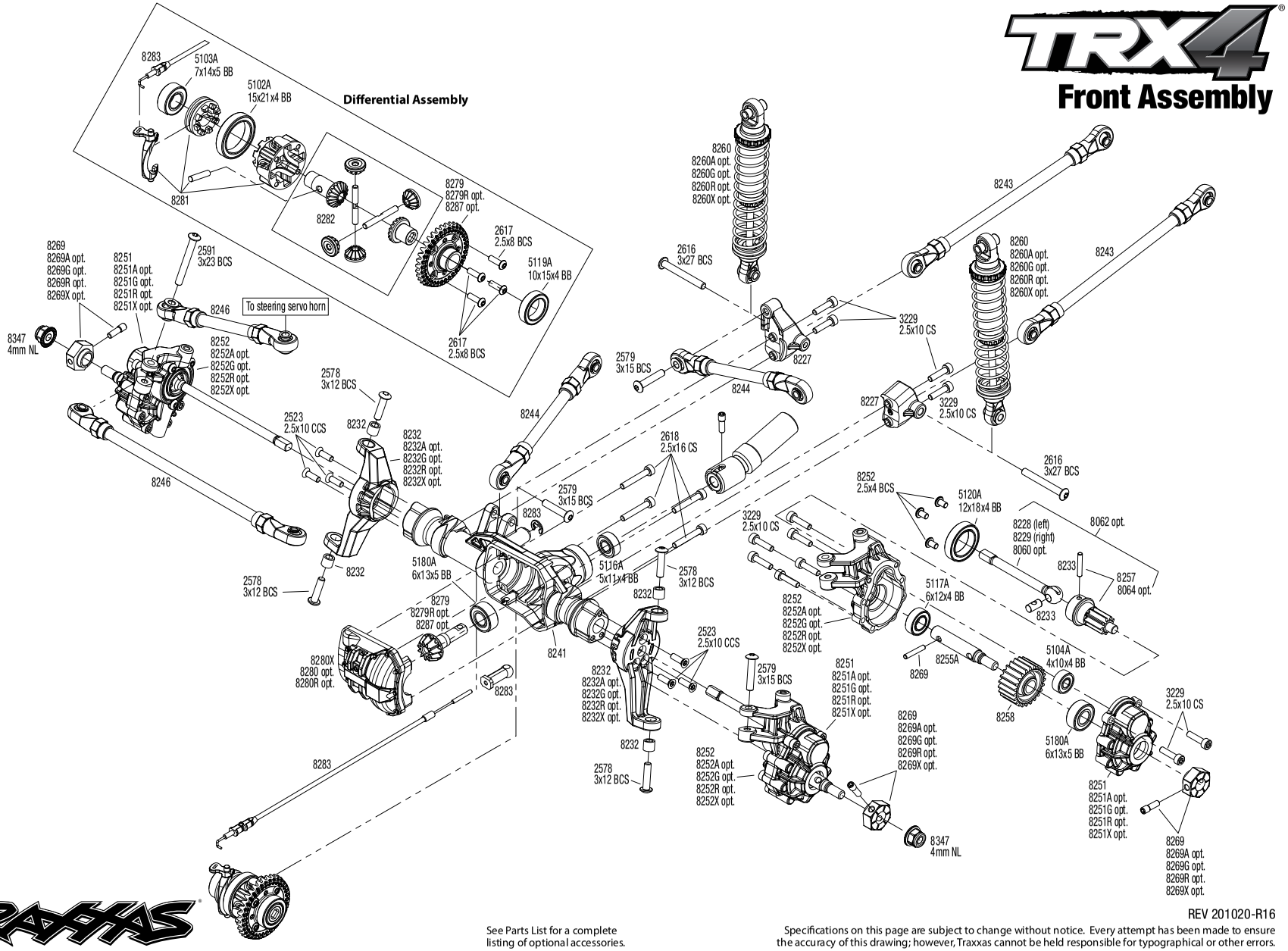

See Parts List for a complete listing of optional accessories.

REV 201020-R16

Specifications on this page are subject to change without notice. Every attempt has been made to ensure the accuracy of this drawing; however, Traxxas cannot be held responsible for typographical or other errors.

Questions? Call toll-free, 1-888-TRAXXAS

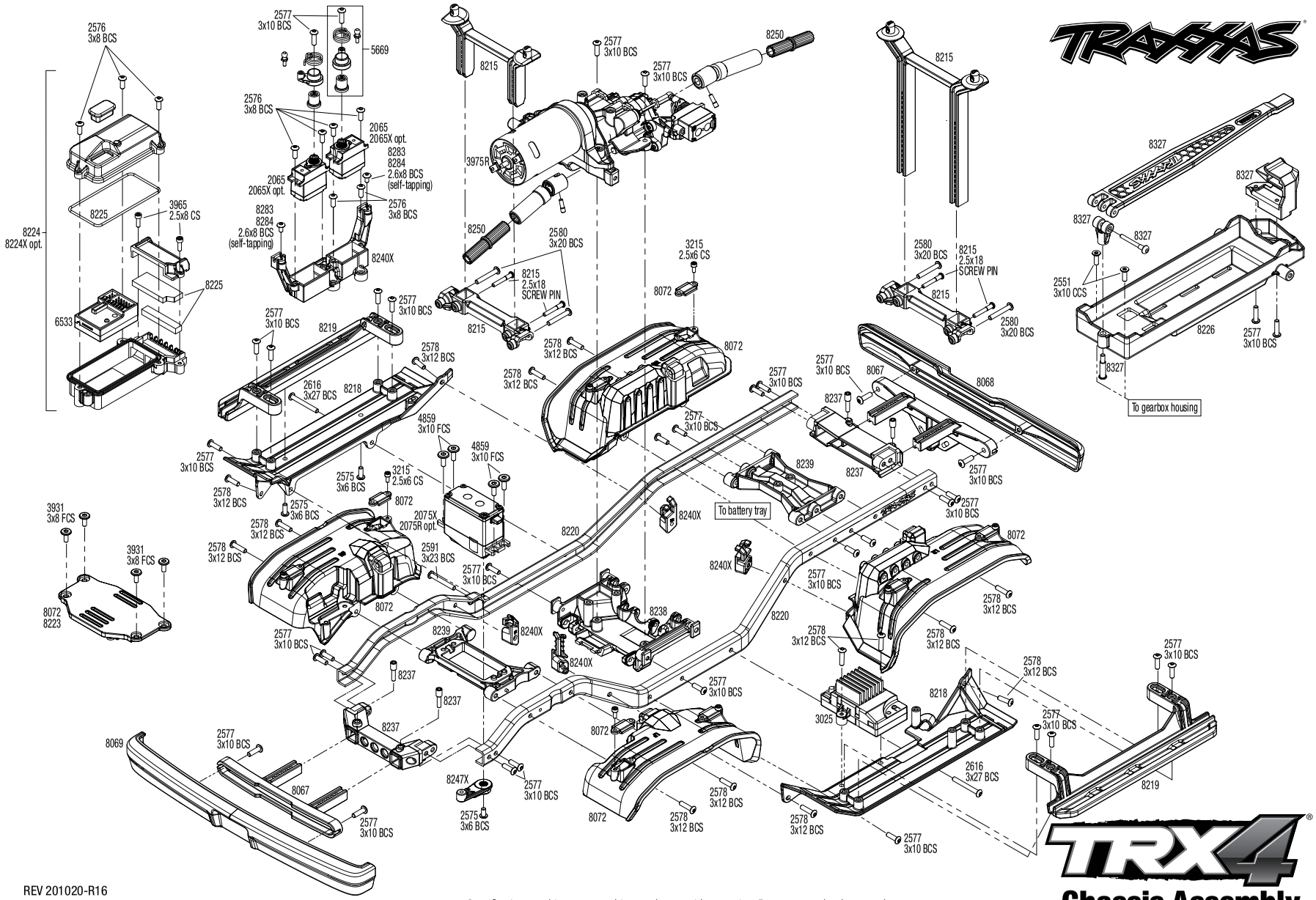

TRX4®

Chassis Assembly

REV 201020-R16

See Parts List for a complete listing of optional accessories.

Specifications on this page are subject to change without notice. Every attempt has been made to ensure the accuracy of this drawing; however, Traxxas cannot be held responsible for typographical or other errors.

TRAXXAS

TRX4

Rear Assembly

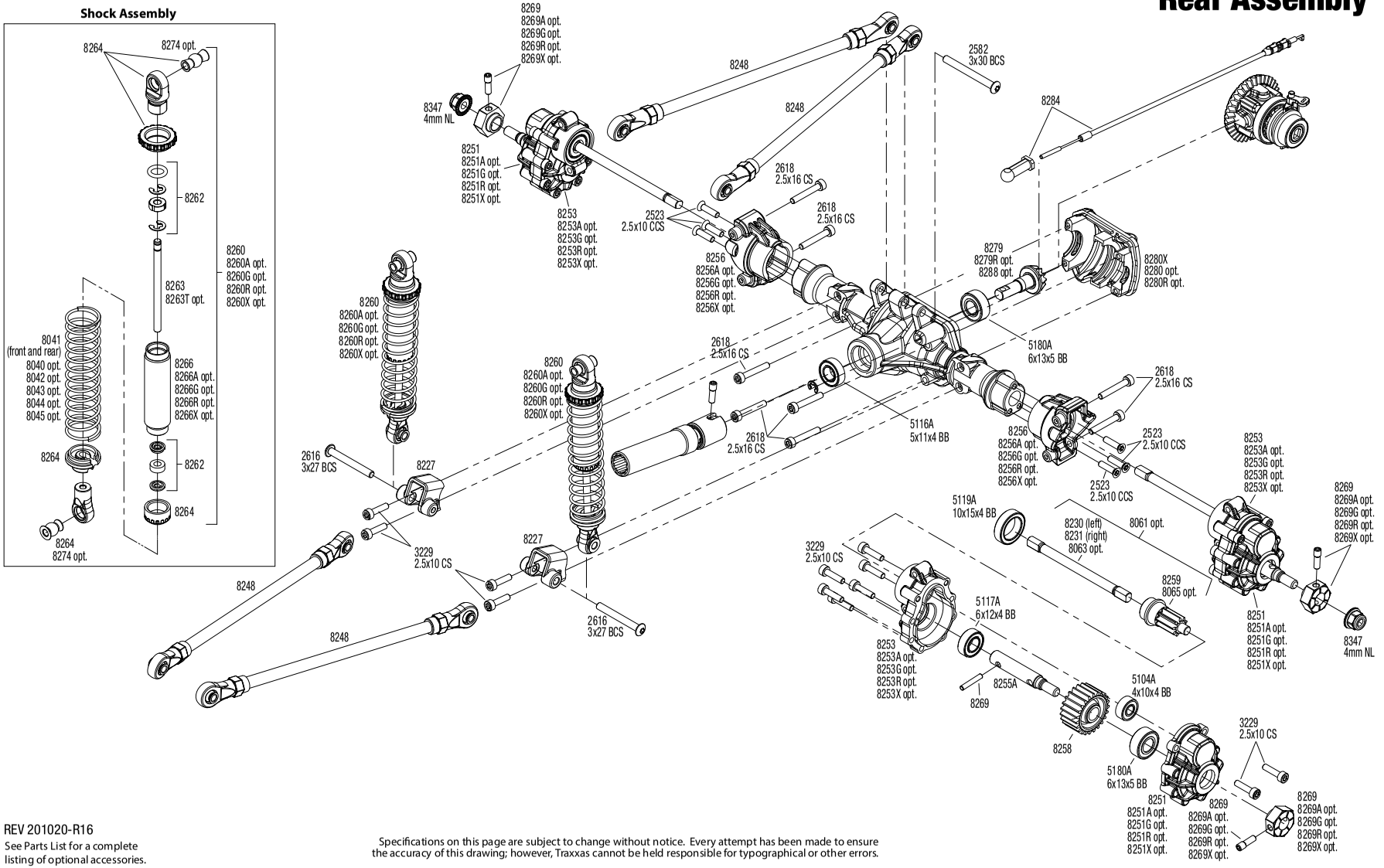

REV 201020-R16

See Parts List for a complete listing of optional accessories.

Specifications on this page are subject to change without notice. Every attempt has been made to ensure the accuracy of this drawing; however, Traxxas cannot be held responsible for typographical or other errors.

Transmission Assembly

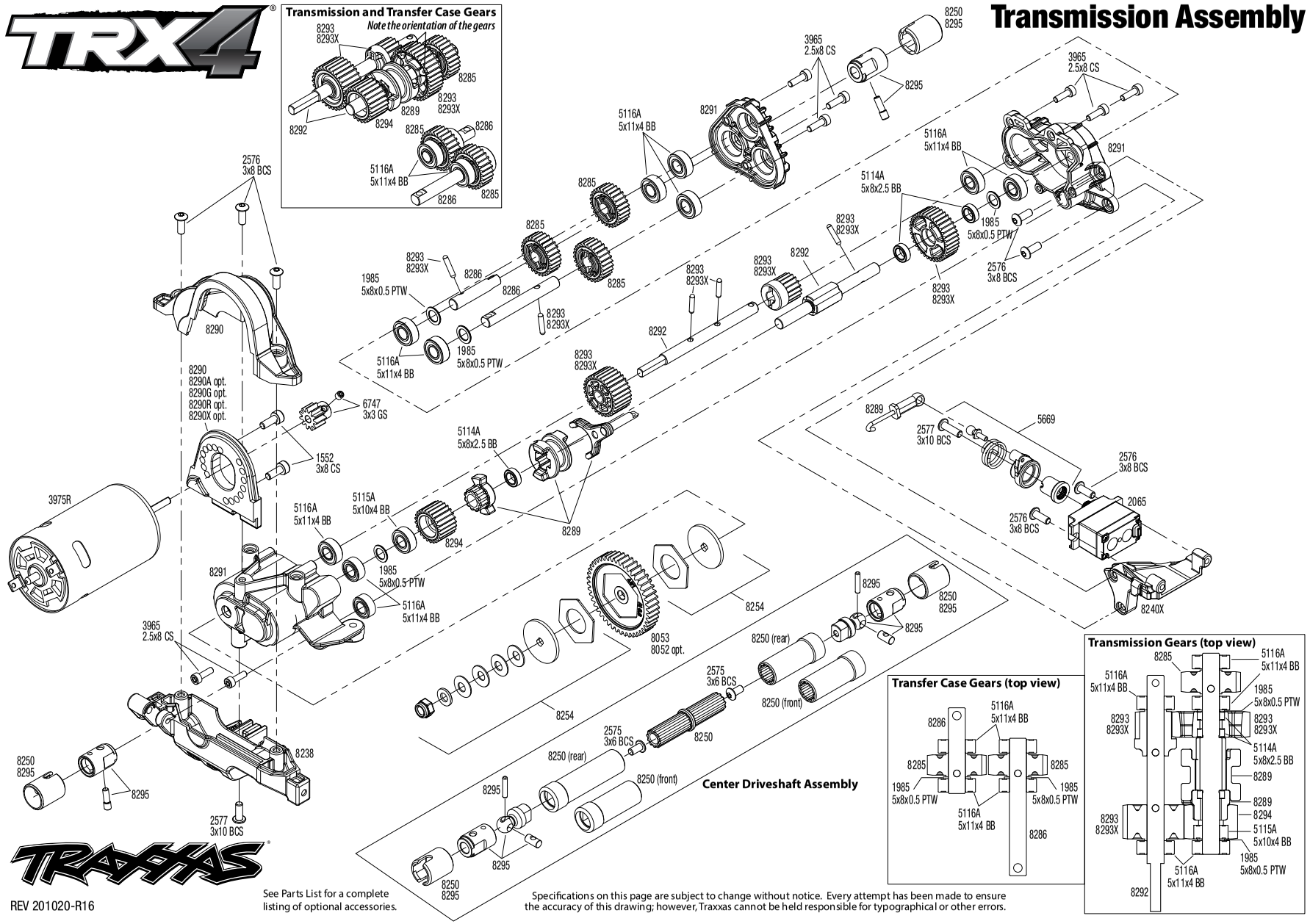

See Parts List for a complete listing of optional accessories.

Specifications on this page are subject to change without notice. Every attempt has been made to ensure the accuracy of this drawing; however, Traxxas cannot be held responsible for typographical or other errors.

TRX4®

Body Assembly

TRAXXAS®

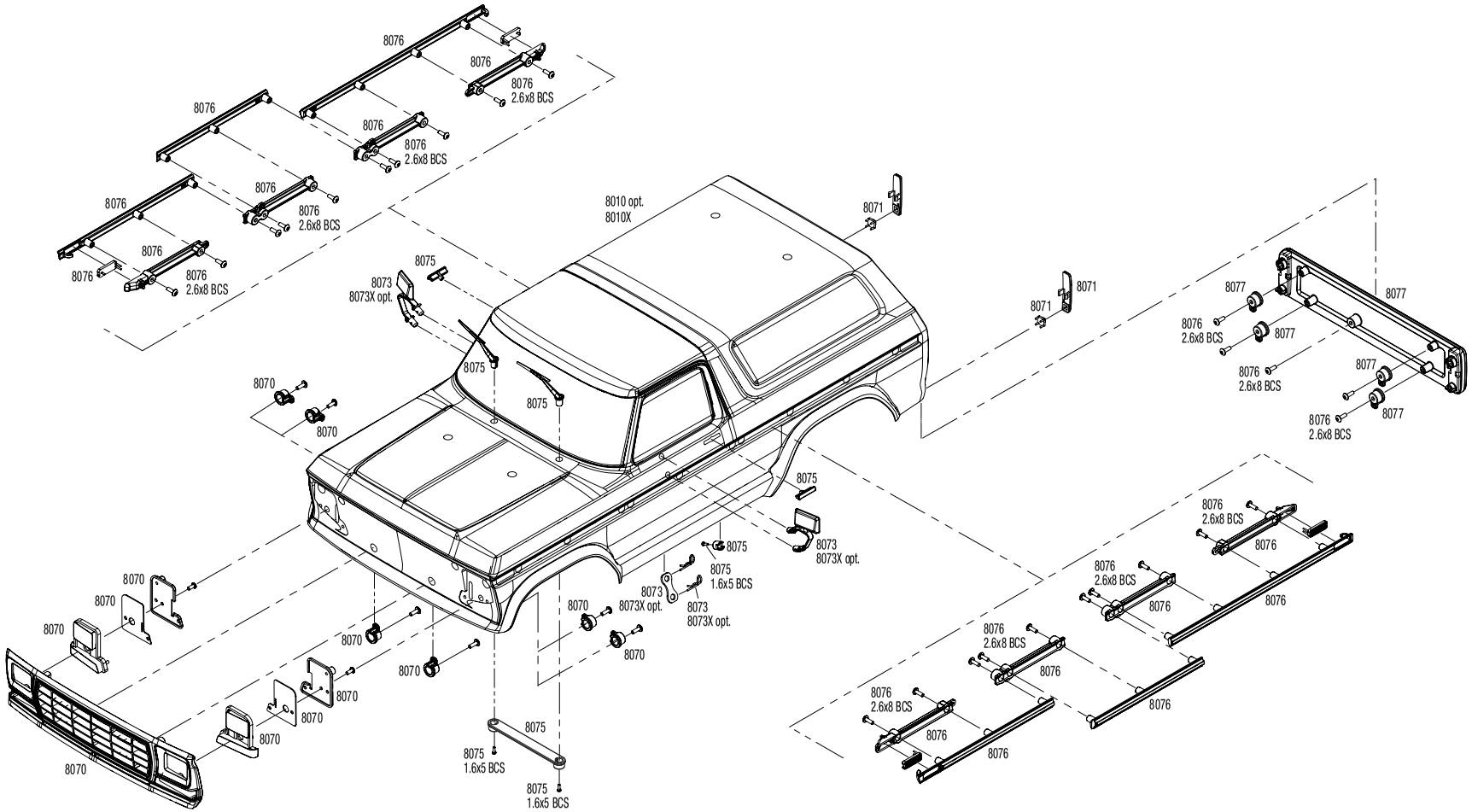

See Parts List for a complete listing of optional accessories.

REV 201020-R16

Specifications on this page are subject to change without notice. Every attempt has been made to ensure the accuracy of this drawing; however, Traxxas cannot be held responsible for typographical or other errors.

Questions? Call toll-free, 1-888-TRAXXAS

TRX4

Link Dimensions

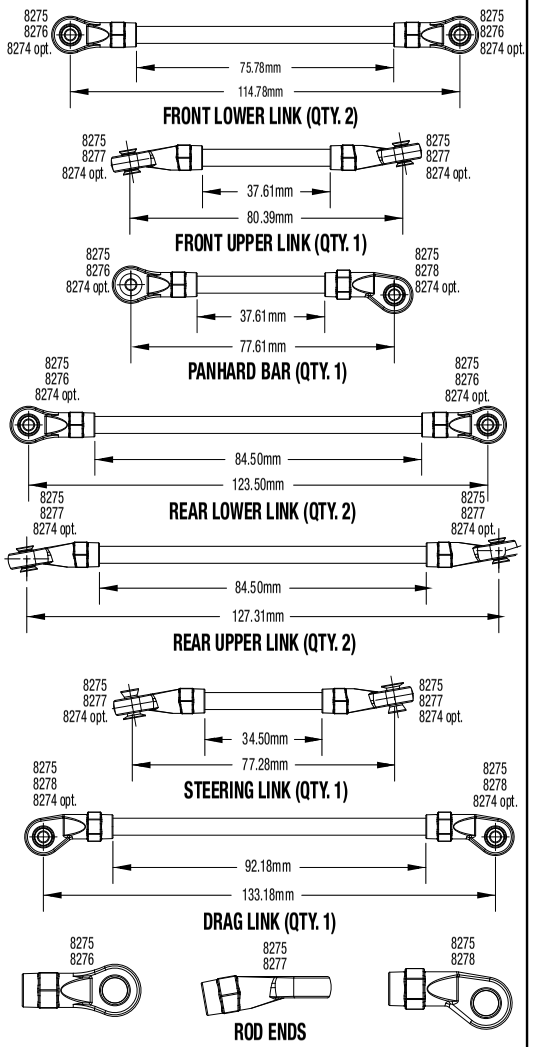

For standard hollow ball replacement, use part #5349.

Modular Assembly

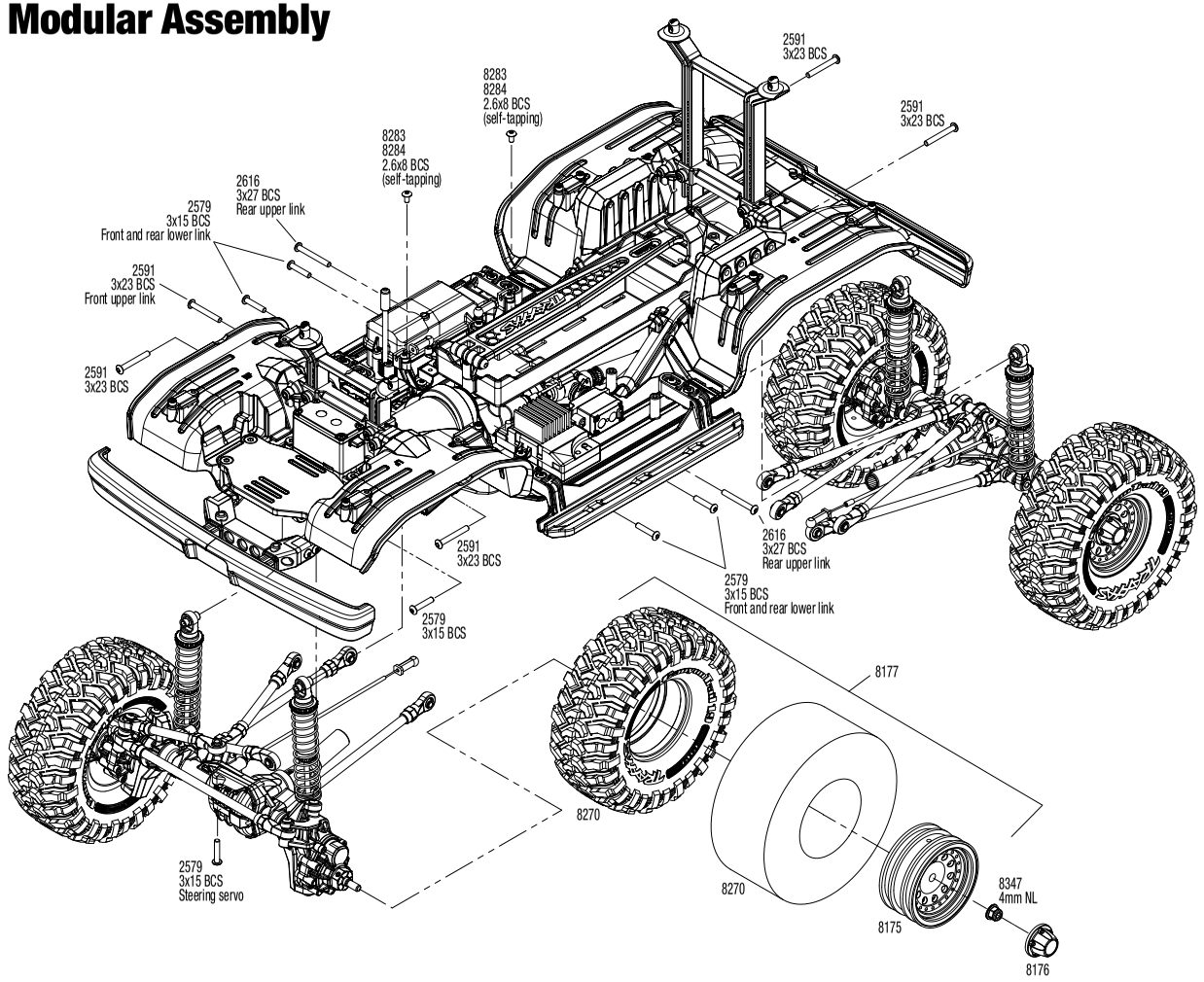

See Parts List for a complete listing of optional accessories.

REV 201020-R16

Specifications on this page are subject to change without notice. Every attempt has been made to ensure the accuracy of this drawing; however, Traxxas cannot be held responsible for typographical or other errors.

PARTS SHOWN IN BOLD ARE OPTIONAL ACCESSORIES.

Part categories and individual part listings are arranged alphabetically.

Axle Components

8241 Axle housing, front
8242 Axle housing, intermediate (TRX-6™) or rear (TRX-4®)
8227 Axle mount set (complete) (front & rear) (for suspension links)
8228 Axle shaft, front (left)/ drive pin/ cross pin
8229 Axle shaft, front (right)/ drive pin/ cross pin
8060 Axle shaft, front, heavy duty (left & right) (requires #8064 front portal drive input gear)
8062 Axle shaft, front, heavy duty (left & right)/ portal drive input gear (machined) (2) (assembled)
8230 Axle shaft, rear (left)
8231 Axle shaft, rear (right)
8061 Axle shaft, rear, heavy duty (left & right)/ portal drive input gear, rear (machined)
8063 Axle, rear, heavy duty (left & right) (requires #8065 rear portal drive input gear)
8233 Cross pin (2)/ drive pin (2) (to rebuild front axle shafts)
8256 Portal drive axle mount, rear (left & right)
8256X Portal drive axle mount, rear, 6061-T6 aluminum (blue-anodized) (left and right)/ 2.5x16 CS (4)
8256A Portal drive axle mount, rear, 6061-T6 aluminum (charcoal gray-anodized) (left and right)/ 2.5x16 CS (4)
8256G Portal drive axle mount, rear, 6061-T6 aluminum (green-anodized) (left and right)/ 2.5x16 CS (4)
8256R Portal drive axle mount, rear, 6061-T6 aluminum (red-anodized) (left and right)/ 2.5x16 CS (4)
8252 Portal drive housing, inner, front (left & right)/ 2.5x4 BCS (6)
8253 Portal drive housing, inner, rear (left or right) (2)
8251 Portal drive housing, outer (front or rear) (2)
8064 Portal drive input gear, front (machined) (left or right) (requires #8060 front axle shaft)
8257 Portal drive input gear, front/ drive pin/ cross pin
8259 Portal drive input gear, rear
8065 Portal drive input gear, rear (machined) (left or right) (requires #8063 rear axle)
8258 Portal drive output gear, front or rear
8252X Portal housings, inner (front), 6061-T6 aluminum (blue-anodized) (2)/ 3x12 BCS (2)
8252A Portal housings, inner (front), 6061-T6 aluminum (charcoal gray-anodized) (2)/ 3x12 BCS (2)
8252G Portal housings, inner (front), 6061-T6 aluminum (green-anodized) (2)/ 3x12 BCS (2)
8252R Portal housings, inner (front), 6061-T6 aluminum (red-anodized) (2)/ 3x12 BCS (2)
8253X Portal housings, inner (rear), 6061-T6 aluminum (blue-anodized) (2)/ 2.5x10 CS (2)
8253A Portal housings, inner (rear), 6061-T6 aluminum (charcoal gray-anodized) (2)/ 2.5x10 CS (2)
8253G Portal housings, inner (rear), 6061-T6 aluminum (green-anodized) (2)/ 2.5x10 CS (2)
8253R Portal housings, inner (rear), 6061-T6 aluminum (red-anodized) (2)/ 2.5x10 CS (2)
8251X Portal housings, outer, 6061-T6 aluminum (blue-anodized) (2)/ 2.5x10 CS (12)
8251A Portal housings, outer, 6061-T6 aluminum (charcoal gray-anodized) (2)/ 2.5x10 CS (12)
8251G Portal housings, outer, 6061-T6 aluminum (green-anodized) (2)/ 2.5x10 CS (12)
8251R Portal housings, outer, 6061-T6 aluminum (red-anodized) (2)/ 2.5x10 CS (12)
8255 Stub axle (portal drive) (2)
8255A Stub axle, extended (portal drive) (2)
8267 Weight, portal housing, brass (34 grams) (2)/ 2.5x8 CS (6) (requires #8251X, 8251R, 8251A, or 8251G outer portal housing)

Bearings & Bushings

5119A Ball bearings, black rubber sealed (10x15x4mm) (2)
5120A Ball bearings, black rubber sealed (12x18x4mm) (2)
5104A Ball bearings, black rubber sealed (4x10x4mm) (2)
5115A Ball bearings, black rubber sealed (5x10x4mm) (2)
5116A Ball bearings, black rubber sealed (5x11x4mm) (2)
5114A Ball bearings, black rubber sealed (5x8x2.5mm) (2)
5117A Ball bearings, black rubber sealed (6x12x4mm) (2)
5180A Ball bearings, black rubber sealed (6x13x5mm) (2)
5103A Ball bearings, black rubber sealed (7x14x5mm) (2)

Body (1969 Chevrolet Blazer)

9112 Body, Chevrolet Blazer (1969 - 1970) (clear, requires painting) (includes grille, side mirrors, door handles, windshield wipers, decals, window masks)
9112X Body, Chevrolet Blazer (1969), complete (black) (includes grill, side mirrors, door handles, windshield wipers, front & rear bumpers, decals)
9125 Bumper pads/ bumper guards (chrome)/ 2.5x10 BCS (4)/ 2.7mm drill bit (fits #9126 or #9127 front bumpers)
9127 Bumper, front (chrome)/ bumper mount/ 3x10 BCS (2)
9124 Bumper, rear (chrome)/ bumper mount/ 3x10 BCS (2)
9113 Decal sheets, Chevrolet Blazer (1969 -1972)
9115 Door handles, left, right, and rear/ retainers (3)/ windshield wipers, left & right/ retainer (1)/ fuel cap/ fuel flange/ fuel cap mount/ 1.6x5 BCS (self-tapping) (7)/ 2.6x8 BCS (1)
9123 Grille, Chevrolet Blazer (1969 - 1970)/ grille retainers (5)/ headlight housing (2)/ headlight lens (2)/ turn signal lens (2)/ hood emblem/ hood emblem mount/ 2.6x8 BCS (5)/ 2.5x6 BCS (4)/ 1.6x5 BCS (self-tapping) (2) (fits #9112 body)
9116 Marker light housing (4)/ marker light mount (4)/ marker light lens (red (2), amber (2))/ reverse lens (left & right)/ 1.6x5 BCS (self-tapping) (8)
9121 Mirrors, side, chrome (left & right)/ o-rings (4)/ body clips (4) (fits #9112 body)
9122 Tail light housing, black (2)/ lens (2)/ retainers (left & right)/ 2.6x8 BCS (self-tapping) (4)

Body (1972 Chevrolet Blazer)

9111 Body, Chevrolet Blazer (1972) (clear, requires painting) (includes grille, side mirrors, side trim, door handles, windshield wipers, decals, window masks)
9111X Body, Chevrolet Blazer (1972), complete (blue) (includes grille, side mirrors, door handles, windshield wipers, front & rear bumpers, decals)
9125 Bumper pads/ bumper guards (chrome)/ 2.5x10 BCS (4)/ 2.7mm drill bit (fits #9126 or #9127 front bumpers)
9126 Bumper, front (chrome)/ bumper mount/ lens (left and right) (2)/ lens mount (left and right) (2)/ 3x10 BCS (2)/ 2.6x6 BCS (4)
9124 Bumper, rear (chrome)/ bumper mount/ 3x10 BCS (2)
9113 Decal sheets, Chevrolet Blazer (1969 -1972)
9115 Door handles, left, right, and rear/ retainers (3)/ windshield wipers, left & right/ retainer (1)/ fuel cap/ fuel flange/ fuel cap mount/ 1.6x5 BCS (self-tapping) (7)/ 2.6x8 BCS (1)
9120 Grille, Chevrolet Blazer (1972)/ grille retainers (5)/ headlight housing (2)/ lens (2)/ 2.6x8 BCS (5)/ 2.5x6 BCS (4) (fits #9111 body)
9116 Marker light housing (4)/ marker light mount (4)/ marker light lens (red (2), amber (2))/ reverse lens (left & right)/ 1.6x5 BCS (self-tapping) (8)
9118 Mirrors, side, chrome (left & right)/ o-rings (4)/ body clips (4) (fits #9111 body)
9117 Side trim, Chevrolet Blazer (1972), left & right/ rear trim, upper & lower/ retainers, left, right & rear/ 2.6x8 BCS (23)/ 1.6x5 BCS (self-tapping) (5) (fits #9111 body)
9119 Tail light housing, chrome (2)/ lens (2)/ retainers (left & right)/ 2.6x8 BCS (self-tapping) (4)

Body (1979 Chevrolet Blazer)

8130 Body, Chevrolet Blazer (1979) (clear, requires painting)/ window masks
8130G Body, Chevrolet Blazer (1979) (orange) (requires grille, side mirrors, door handles, windshield wipers, decals)
8130A Body, Chevrolet Blazer (1979) (red) (requires grille, side mirrors, door handles, windshield wipers, decals)
8130X Body, Chevrolet Blazer (1979), complete (orange) (includes grille, side mirrors, door handles, windshield wipers, front & rear bumpers, decals)
8130R Body, Chevrolet Blazer (1979), complete (red) (includes grille, side mirrors, door handles, windshield wipers, front & rear bumpers, decals)
8131 Decal sheet, Chevrolet Blazer (1979)
8132 Door handles, left, right & rear tailgate/ windshield wipers, left & right/ retainers (2)/ 1.6x5 BCS (self-tapping) (7) (fits #8130 body)
8134 Grille, Chevrolet Blazer (1979)/ grille retainers (4)/ headlight housing (2)/ lens (2)/ 2.6x8 BCS (4)/ 2.5x6 BCS (2) (fits #8130 body)
8133X Mirrors, side (folding) (fits #8130 body)
8133 Mirrors, side, chrome (left & right)/ o-rings (4)/ body clips (4) (fits #8130 body)

FORD BRONCO (82046-4)

8135 **Tail lights, left & right (assembled)/ tail light retainers, left & right/ side marker lights (assembled) (2)/ side marker retainers (2)/ mounting tape (2)/ 1.6x5 BCS (self-tapping) (4)/ 2.6x8 BCS (2) (fits #8130 body)**

Body (1979 Ford Bronco)

8010 **Body, Ford Bronco (1979) (clear, requires painting)/ decals/ window masks/ tailgate panel insert/ adhesive foam tape (2)**
8010X **Body, Ford Bronco (1979), complete (black) (includes front and rear bumpers, push bar, rear body mount, grille, side mirrors, door handles, windshield wipers, spare tire mount, red and sunset decals) (requires #8072 inner fenders)**
8078R Decal sheet, Bronco, red (fits #8010 body)
8078 Decal sheet, Bronco, sunset (fits #8010 body)
8075 Door handles, left & right/ windshield wipers, left & right/ retainers (3)/ 1.6x5 BCS (self-tapping) (4) (fits #8010 body)
8070 Grille, Ford Bronco/ grille retainers (6)/ headlight housing (2)/ lens (2)/ 2.6x8 BCS (6)/ 2.5x6 BCS (2) (fits #8010 body)
8073 Mirrors, side, black (left & right)/ retainers (2)/ body clips (4) (fits #8010 body)
8073X **Mirrors, side, chrome (left & right)/ retainers (2)/ body clips (4) (fits #8010 body)**
8076 Side trim, left & right (chrome)/ retainers/ LED lens/ 2.6x8 BCS (24) (fits #8010 body)
8074 **Spare tire mount/ mounting bracket/ spare tire cover/ mounting hardware**
8077 Tailgate panel insert (clear, requires painting)/ adhesive foam tape (2) (fits #8010 body)
8071 Tailgate panel/ tail light lens (2) (left & right) (fits #8010 body)

Body (Land Rover Defender)

8011 **Body, Land Rover® Defender® (clear, trimmed, requires painting)/ window masks/ decal sheet**
8011A **Body, Land Rover® Defender®, adventure orange (complete with ExoCage, inner fenders, fuel canisters, and jack)**
8011X **Body, Land Rover® Defender®, graphite silver (painted)/ decals**
8011R **Body, Land Rover® Defender®, red (painted)/ decals**
8012 **Decals, Land Rover® Defender®**
8016 **ExoCage (complete with assembly hardware; #8015 roof basket sold separately) (fits #8011 body)**
8019 **Fender brace, inner, front & rear**
8017 **Fender flares, front & rear (2 each) (fits #8011 or #8211 body)**
8018 **Fenders, inner, front & rear (2 each)/ rock light covers (8)**
8013 **Grille, Land Rover® Defender®/ grille mount (3)/ headlight housing (2)/ lens (2)/ headlight mount (2) (fits #8011 body)**
8020 **Mirrors, side (left & right)/ snorkel/ mounting hardware (fits #8011 body)**
8015 **Roof basket (requires #8016 ExoCage) (fits #8011 body)**
8021 **Spare tire mount/ mounting bracket/ screw pins (2)**
8014 **Tail light housing (2)/ lens (2)/ decals (left & right) (fits #8011 body)**

Body (Mercedes-Benz® G 500®)

8811 **Body, Mercedes-Benz® G 500® 4x4² (clear, requires painting)/ decals/ window masks (includes rear body post, grille, side mirrors, door handles, & windshield wipers)**
8812 **Decals, Mercedes-Benz® G 500® 4x4²**
8813X **Grille, Mercedes-Benz® G 500® 4x4²/ grille mount/ grille insert/ headlight lens (2)/ headlight reflector (2)/ reflector lens (2)/ bumperette front (2)/ bumperette mount (2)/ turn signal housing (2)/ turn signal housing retainer (2)/ turn signal len**
8817 **Mirrors, side, black (left & right)/ o-rings (4)/ windshield wipers, left, right, & rear/ wiper retainers (2)/ body clips (4)/ 1.6x5 BCS (self-tapping) (3)**
8822 **Roof visor/ visor retainer/ visor lens (2)/ 2.6x6 BCS (3)/ 3x4 GS (4)**
8816X **Side marker light housing (2)/ mount (2)/ lens (2)/ 1.6x7 BCS (self-tapping) (2)**
8814X **Tail light lens (2)/ tail light housing (2)/ tail light housing mount (2)/ reverse lens (2)/ 1.6x5 BCS (4) (left & right)**

Body (Tactical Unit)

8211X **Body, Tactical Unit, night camo (painted)/ decals**
8019 **Fender brace, inner, front & rear**
8017 **Fender flares, front & rear (2 each) (fits #8011 or #8211 body)**
8018 **Fenders, inner, front & rear (2 each)/ rock light covers (8)**
8020 **Mirrors, side (left & right)/ snorkel/ mounting hardware (fits #8011 body)**
8021 **Spare tire mount/ mounting bracket/ screw pins (2)**

Body (TRX-4® Sport)

8112 **Body with camper, TRX-4® Sport (clear, trimmed, requires painting)/ window masks/ decal sheet**
8111R **Body, TRX-4® Sport (clear, trimmed, die-cut for LED light kit, requires painting)/ window masks/ decal sheet**
8111 **Body, TRX-4® Sport (clear, trimmed, requires painting)/ window masks/ decal sheet**
8113 **Decal sheet, TRX-4® Sport**
8120X **Expedition rack, complete (includes traction boards, shovel, axe, jack, fire extinguisher, fuel cans, & mounting hardware) (fits #8111 or #8111R body)**
8120 **Expedition rack/ mounting hardware (fits #8111 or #8111R body)**
8116 **Grille/ grille retainers (2)/ grille mount/ lens (2)/ 2.5x8 BCS (6) (fits #8111 or #8112 body)**
8119 **Mirrors, side (left & right)/ snorkel/ mounting hardware (fits #8111 or #8112 body)**
8122 **Shovel/ axe/ accessory mount/ mounting hardware**
8118 **Spare tire mount/ mounting hardware**
8117 **Tailgate panel/ tailgate retainers (2)/ tailgate mount/ tail light lens (2) (left & right)/ 2.5x8 BCS (4) (fits #8111 or #8112 body)**
8121X **Traction boards, blue/ mounting hardware**
8121G **Traction boards, green/ mounting hardware**
8121A **Traction boards, yellow/ mounting hardware**
8121 **Traction boards/ mounting hardware**

Body Accessories

1926 **Antenna caps, vinyl (2)/ antenna spool**
1726 Antenna, tube (1)/ vinyl antenna cap (1)/ wire retainer (1)
1834 Body clips (12) (standard size)
1834A **Body clips, black (12) (standard size)**
3934 **Body clips, heavy duty (12)**
3934A **Body clips, heavy duty (black) (12)**
8215 Body mounts & posts, front & rear (complete set)
8115 **Body posts, front & rear**
4915 Body washers, foam adhesive (10)
2514 **Decal sheet, racing sponsors**
8081 **Fender extensions (4)/ 3x8 flat-head screws (24) (requires #8080 narrow inner fenders)**
8080 **Fenders, inner (narrow), front & rear (2 each)/ rock light covers (8)/ battery plate/ 3x8 flat-head screws (4)**
8072 Fenders, inner, front & rear (2 each)/ rock light covers (8)/ battery plate/ 3x8 flat-head screws (4)
9950 **Official Team Traxxas® racing decal set (flag logo/ 6-color)**

Bumpers & Skidplates

8234 **Bumper D-Rings, grey (front or rear)/ 2x12 CS (4)**
8234R **Bumper D-rings, red (front or rear)/ 2.0x12 CS (4)**
8067 Bumper mounts, front & rear
8237 **Bumper mounts, front & rear/ screw pins (4)**
8069 Bumper, front (chrome)/ bumper mount/ 3x10 BCS (2)
8235 **Bumper, front/ winch**
8236 **Bumper, rear**
8068 Bumper, rear (chrome)/ bumper mount/ 3x10 BCS (2)
8066 **Push bar, bumper (chrome) (fits #8069 bumper)**
8238 Skidplate/ lower gear cover

Chassis & Attachments

8223 Battery plate/ battery strap/ 3x8 flat-head screws (4) (requires #8072 inner fenders)
8215 Body mounts & posts, front & rear (complete set)
8224 Box, receiver (sealed)/ wire cover/ foam pads/ silicone grease/ 3x8 BCS (5)/ 2.5x8 CS (2)
8058 **Chassis conversion kit, TRX-4® (long to short wheelbase) (includes rear upper & lower suspension links, front & rear inner fenders, short female half shaft, battery tray, 3x8mm FCS (4))**
8057 **Chassis conversion kit, TRX-4® (short to long wheelbase) (includes rear upper & lower suspension links, front & rear shock towers, long female half shaft)**
8220 Chassis rails, 448mm (steel) (left & right)
8072 Fenders, inner, front & rear (2 each)/ rock light covers (8)/ battery plate/ 3x8 flat-head screws (4)
8218 Floor pans, left & right
8224X **Receiver box cover (for use only with #8224 receiver box & #2260 BEC)/ foam pads/ seals/ silicone grease**
8219 Rock sliders, left & right
8225 **Seal kit, receiver box (includes o-ring, seals, and silicone grease)**
8240X Servo mount, 2-speed/ servo mount, T-Lock/ wire clips
8239 Servo mount, steering/ chassis crossmember
8226 Tray, battery

Differential Components

8281 Carrier, differential/ differential slider/ T-Lock fork
8280A **Differential cover, front or rear (black)**
8280X Differential cover, front or rear (chrome-plated)
8280 **Differential cover, front or rear (grey)**
8280R **Differential cover, front or rear (red)**
8282 Gear set, differential (output gears (2), spider gears (4), spider gear shaft (2))

8295	Output drive, transmission or differential (pin retainer (1)/ drive cup (1)/ drive ball (1)/ drive pin (1)/ 3x11 screw pin (1)/ cross pin (black) (1) 3x6 BCS with threadlock (1))
8279	Ring gear, differential/ pinion gear, differential
8279R	**Ring gear, differential/ pinion gear, differential (machined)**
8287	**Ring gear, differential/ pinion gear, differential (overdrive, machined)**
8288	**Ring gear, differential/ pinion gear, differential (underdrive, machined)**
8297	**Spool/ differential housing plug/ e-clip**

Driveline Components

8250	Half shafts, center (internal splined, front (2) & internal splined, rear (2)/ external splined (2)/ pin retainer (4)) (plastic parts only)
8255A	Stub axle, extended (portal drive) (2)
8269	Wheel hubs, 12mm hex (2)/ stub axle pins (2) (steel)
8269X	**Wheel hubs, 12mm hex, 6061-T6 aluminum (blue-anodized) (4)/ screw pin (4)**
8269A	**Wheel hubs, 12mm hex, 6061-T6 aluminum (charcoal gray-anodized) (4)/ screw pin (4)**
8269G	**Wheel hubs, 12mm hex, 6061-T6 aluminum (green-anodized) (4)/ screw pin (4)**
8269R	**Wheel hubs, 12mm hex, 6061-T6 aluminum (red-anodized) (4)/ screw pin (4)**

Hardware

1552	Backplate screws (3x8mm cap-head machine) (6)/washers (6)/ wrench
1834	Body clips (12) (standard size)
1834A	**Body clips, black (12) (standard size)**
3934	**Body clips, heavy duty (12)**
3934A	**Body clips, heavy duty (black) (12)**
8167X	**Hardware kit, stainless steel, beadlock rings (contains stainless steel hardware for 4 wheels)**
8298	**Hardware kit, stainless steel, TRX-4® (contains all stainless steel hardware used on TRX-4)**
8151	**Hardware kit, stainless steel, TRX-4® High Lift Kit (contains all stainless steel hardware used on TRX-4® Long Arm Lift Kit)**
5476X	**Hex wrenches; 1.5mm, 2mm, 2.5mm, 3mm, 2.5mm ball**
3647	**Nuts, 4mm flanged nylon locking (steel, serrated) (8)**
8347	Nuts, 4mm flanged nylon locking, serrated (black) (10)
1747R	**Nuts, aluminum, flanged, serrated (4mm) (blue-anodized) (4)**
1747G	**Nuts, aluminum, flanged, serrated (4mm) (green-anodized) (4)**
1747P	**Nuts, aluminum, flanged, serrated (4mm) (pink-anodized) (4)**
1985	PTFE-coated washers, 5x8x0.5mm (20) (use with ball bearings)
8221	Screw pin, 3x10mm (6)
3229	Screws, 2.5x10mm cap-head machine (hex drive) (6)
2523	Screws, 2.5x10mm countersunk machine (hex drive) (6)
3236	Screws, 2.5x12mm cap-head machine (6)
2618	Screws, 2.5x16mm cap-head machine (6)
3215	Screws, 2.5x6mm cap-head machine (hex drive) (6)
2617	Screws, 2.5x8mm button-head machine (hex drive) (6)
3965	Screws, 2.5x8mm cap-head machine (6)
2524	Screws, 2.5x8mm countersunk machine (hex drive) (6)
8299	Screws, 2.6x12mm button-head, self-tapping (hex drive) (6)
8167	Screws, 2x10mm cap-head, self-tapping (hex drive) (10)
2564	Screws, 2x8mm cap-head machine (hex drive) (6)
2577	Screws, 3x10mm button-head machine (hex drive) (6)
4859	Screws, 3x10mm flat-head machine (hex drive) (4)
2578	Screws, 3x12mm button-head machine (hex drive) (6)
2579	Screws, 3x15mm button-head machine (hex drive) (6)
2591	Screws, 3x23mm button-head machine (hex drive) (6)
2581	Screws, 3x25mm button-head machine (hex drive) (6)
2616	Screws, 3x27mm button-head machine (hex drive) (6)
2582	Screws, 3x30mm button-head machine (hex drive) (6)
2575	Screws, 3x6mm button-head machine (hex drive) (6)
3932	Screws, 3x6mm flat-head machine (hex drive) (6)
2576	Screws, 3x8mm button-head machine (hex drive) (6)
3931	Screws, 3x8mm flat-head machine (hex drive) (6)
3933	Screws, 4x16mm button-head machine (hex drive) (6)

LED Light Accessories

8031	**3-in-1 wire harness, LED light kit**
8089	**4-in-2 wire harness, LED light kit**
8028	**LED lights, power supply (regulated, 3V, 0.5-amp)/ 3-in-1 wire harness**
8026X	**LED rock light kit, TRX-4®/TRX-6™ (requires #8028 power supply and #8018, #8072, or #8080 inner fenders)**

LED Lights (1969-1972 Chevrolet Blazer)

8090	**LED light set, complete with power supply (contains headlights, tail lights, side marker lights, & distribution block) (fits #9111 or 9112 body)**

LED Lights (1979 Chevrolet Blazer)

8039	**LED light set (contains headlights, tail lights, side marker lights, distribution block (fits #8130 body, requires #8028 power supply)**
8038	**LED light set, complete with power supply (contains headlights, tail lights, side marker lights, distribution block, and power supply) (fits #8130 body)**

LED Lights (1979 Ford Bronco)

8036	**LED light set (contains headlights, tail lights, side marker lights, & distribution block) (fits #8010 body, requires #8028 power supply)**
8035	**LED light set, complete with power supply (contains headlights, tail lights, side marker lights, & distribution block) (fits #8010 body)**
8037	**LED lights, high/low switch (for #8035 or #8036 LED light kits)**

LED Lights (Land Rover Defender)

8027	**LED headlight/tail light kit (fits #8011 body, requires #8028 power supply)**
8025	**LED light bar (Rigid®), TRX-4 (requires #8028 power supply)**
8029	**LED light bar kit (Rigid®)/power supply, TRX-4®**
8030	**LED light set, complete (contains rock light kit, LED light bar (Rigid®), LED headlight/tail light kit, power supply, & 3-in-1 wire harness) (fits #8011 body)**

LED Lights (Mercedes-Benz® G 500® 4x4²)

8899	**LED light set (contains headlights, tail lights, roof lights, and distribution block) (fits #8811 or #8825 body, requires #8028 power supply)**
8898	**LED light set, complete with power supply (contains headlights, tail lights, roof lights, & distribution block) (fits #8811 or #8825 body)**

LED Lights (TRX-4® Sport)

8086	**LED expedition rack scene light kit (fits #8111 body, requires #8028 power supply)**
8084	**LED headlight/tail light kit (fits #8111 or #8112 body, requires #8028 power supply)**
8088	**LED light bar, front bumper (fits #8124 front bumper, requires #8028 power supply)**
8087	**LED light bar, roof lights (fits #8111 body, requires #8028 power supply)**
8085	**LED light set, complete with power supply (contains headlights, tail lights, & distribution block) (fits #8111 or #8112 body)**

Long Arm Lift Kit

8162X	**Body, GTS shock, long (aluminum, blue-anodized) (1) (for use with #8140X TRX-4® Long Arm Lift Kit)**
8162R	**Body, GTS shock, long (aluminum, red-anodized) (1) (for use with #8140R TRX-4® Long Arm Lift Kit)**
8162	**Body, GTS shock, long (silver aluminum) (1) (for use with #8140 TRX-4® Long Arm Lift Kit)**
8148	**Cable, T-lock (extra long) (for use with TRX-4® Long Arm Lift Kit)**
8147	**Cable, T-lock (medium) (for use with TRX-4® Long Arm Lift Kit)**
8150	**Driveshaft extension kit, center (includes internal splined, x-long (2), internal splined, long (1) and internal splined, medium (1)) (for use with TRX-4® Long Arm Lift Kit)**
8140	**Long Arm Lift Kit, TRX-4®, complete**
8140X	**Long Arm Lift Kit, TRX-4®, complete (includes blue powder coated links, blue-anodized shocks)**
8140R	**Long Arm Lift Kit, TRX-4®, complete (includes red powder coated links, red-anodized shocks)**
8149	**Rod ends, extended (standard (4), angled (4))/ hollow balls (8) (for use with TRX-4® Long Arm Lift Kit)**
8141	**Servo mount, steering (for use with TRX-4® Long Arm Lift Kit)**
8161	**Shock shaft, 3x57mm (GTS) (2) (includes bump stops) (for use with TRX-4® Long Arm Lift Kit)**
8160X	**Shocks, GTS, aluminum (blue-anodized) (assembled without springs) (4) (for use with #8140X TRX-4® Long Arm Lift Kit)**
8160R	**Shocks, GTS, aluminum (red-anodized) (assembled without springs) (4) (for use with #8140R TRX-4® Long Arm Lift Kit)**
8160	**Shocks, GTS, silver aluminum (assembled without springs) (4) (for use with #8140 TRX-4® Long Arm Lift Kit)**
8153	**Springs, shock, long (natural finish) (GTS) (0.29 rate, white stripe) (for use with TRX-4® Long Arm Lift Kit)**
8154	**Springs, shock, long (natural finish) (GTS) (0.39 rate, orange stripe) (for use with TRX-4® Long Arm Lift Kit)**
8155	**Springs, shock, long (natural finish) (GTS) (0.47 rate) (included with TRX-4® Long Arm Lift Kit)**
8156	**Springs, shock, long (natural finish) (GTS) (0.54 rate, green stripe) (for use with TRX-4® Long Arm Lift Kit)**
8157	**Springs, shock, long (natural finish) (GTS) (0.62 rate, blue stripe) (for use with TRX-4® Long Arm Lift Kit)**

FORD BRONCO (82046-4)

8146X	**Steering link, 5x117mm (1)/ draglink, 5x60mm (1)/ panhard link, 5x63mm (blue powder coated steel) (assembled with hollow balls) (for use with #8140X TRX-4® Long Arm Lift Kit)**
8146R	**Steering link, 5x117mm (1)/ draglink, 5x60mm (1)/ panhard link, 5x63mm (red powder coated steel) (assembled with hollow balls) (for use with #8140R TRX-4® Long Arm Lift Kit)**
8144X	**Suspension link, front upper, 5x68mm (1) (blue powder coated steel) (assembled with hollow balls) (for use with #8140X TRX-4® Long Arm Lift Kit)**
8144R	**Suspension link, front upper, 5x68mm (1) (red powder coated steel) (assembled with hollow balls) (for use with #8140R TRX-4® Long Arm Lift Kit)**
8144	**Suspension link, front upper, 5x68mm (1) (steel) (assembled with hollow balls) (for use with #8140 TRX-4® Long Arm Lift Kit)**
8143	**Suspension links, front lower (2) (5x104mm, steel) (assembled with hollow balls) (for use with #8140 TRX-4® Long Arm Lift Kit)**
8143X	**Suspension links, front lower, blue (2) (5x104mm, powder coated steel) (assembled with hollow balls) (for use with #8140X TRX-4® Long Arm Lift Kit)**
8143R	**Suspension links, front lower, red (2) (5x104mm, powder coated steel) (assembled with hollow balls) (for use with #8140R TRX-4® Long Arm Lift Kit)**
8145	**Suspension links, rear lower (2) (5x115mm, steel) (assembled with hollow balls) (for use with #8140 TRX-4® Long Arm Lift Kit)**
8145X	**Suspension links, rear lower, blue (2) (5x115mm, powder coated steel) (assembled with hollow balls) (for use with #8140X TRX-4® Long Arm Lift Kit)**
8145R	**Suspension links, rear lower, red (2) (5x115mm, powder coated steel) (assembled with hollow balls) (for use with #8140R TRX-4® Long Arm Lift Kit)**
8142	**Suspension links, rear upper (2) (5x115mm, steel) (assembled with hollow balls) (for use with #8140 TRX-4® Long Arm Lift Kit)**
8142X	**Suspension links, rear upper, blue (2) (5x115mm, powder coated steel) (assembled with hollow balls) (for use with #8140X TRX-4® Long Arm Lift Kit)**
8142R	**Suspension links, rear upper, red (2) (5x115mm, powder coated steel) (assembled with hollow balls) (for use with #8140R TRX-4® Long Arm Lift Kit)**
8172	**Tires and wheels, assembled (Method 105 2.2" black chrome beadlock wheels, Canyon Trail 5.3x2.2" tires, foam inserts) (1 left, 1 right)**
8181	**Tires and wheels, assembled, glued (TRX-4® Sport 2.2" wheels, Canyon Trail 5.3x2.2" tires) (2)**
8170	**Tires, Canyon Trail 5.3x2.2"/ foam inserts (2)**
8171	**Wheels, Method 105 2.2" (black chrome, beadlock) (beadlock rings sold separately)**
8171A	**Wheels, Method 105 2.2" (charcoal gray, beadlock) (beadlock rings sold separately)**

Motors & Electronics

1926	Antenna caps, vinyl (2)/ antenna spool
1726	Antenna, tube (1)/ vinyl antenna cap (1)/ wire retainer (1)
2262	**BEC, complete (includes receiver box cover and seals)**
2064	Gear set (for 2065 waterproof sub-micro servo)
2064X	**Gear set, metal (for 2065X waterproof sub-micro servo)**
2072X	Gear set, metal (for 2070, 2075 servos)
2252	**Gear set, metal (for 2250, 2255 servos)**
2072R	**Gear set, metal, high speed (for 2070, 2075 servos)**
8290X	**Motor mount plate, 6061-T6 aluminum (blue-anodized)**
8290A	**Motor mount plate, 6061-T6 aluminum (charcoal gray-anodized)**
8290G	**Motor mount plate, 6061-T6 aluminum (green-anodized)**
8290R	**Motor mount plate, 6061-T6 aluminum (red-anodized)**
3975R	Motor, Titan® 550, reverse rotation (21-turns/ 14 volts) (1)
8290	Plate, motor/ upper spur gear cover
2254	**Servo case, aluminum (blue-anodized) (middle) (for 2250 servo)**
2253	**Servo case, aluminum (red-anodized) (middle) (for 2255 servo)**
2251	**Servo case, plastic (top, middle, bottom)/ gaskets/ hardware (for 2250, 2255 servos)**
2063	Servo case/gaskets (for 2065 waterproof sub-micro servo)
2063X	**Servo case/gaskets (for 2065X metal gear, waterproof, sub-micro servo)**
5669	Servo horn (with built-in spring and hardware) (for Summit locking differential)
2075R	**Servo, digital high-speed, metal gear (ball bearing), waterproof**
2250	**Servo, digital high-torque 330 coreless, metal gear (ball bearing), waterproof (#2262 external BEC and #8247X metal servo horn recommended for optimal performance)**
2255	**Servo, digital high-torque 400 brushless, metal gear (ball bearing), waterproof (#2262 external BEC and #8247X metal servo horn recommended for optimal performance)**
2075X	Servo, digital high-torque, metal gear (ball bearing), waterproof
2065	Servo, sub-micro, waterproof
2065X	**Servo, sub-micro, waterproof, metal gear**
3025	XL-5HV 3s Electronic Speed Control, waterproof (low-voltage detection, fwd/rev/brake)
2261	**Y-harness, BEC**

Radio System, Batteries & Chargers

2849X	**4000mAh 11.1v 3-Cell 25C LiPo Battery**
2872X	**5000mAh 11.1v 3-Cell 25C LiPo Battery**
2842X	**5000mAh 7.4v 2-Cell 25C LiPo Battery**
2843X	**5800mAh 7.4v 2-Cell 25C LiPo Battery**
2869X	**7600mAh 7.4v 2-Cell 25C LiPo Battery**
2976	**AC to DC converter, 40W**
2938X	**Adapter, Traxxas® iD® LiPo battery (adapts Traxxas iD batteries to separate balance ports)**
1726	Antenna, tube (1)/ vinyl antenna cap (1)/ wire retainer (1)
2943	**Battery charge indicators (green (4), blue (4), grey (4))**
6548	Battery door, transmitter (replacement for #6516, 6517, 6528, 6529, 6530 transmitters)
8222	**Battery strap (for 2200 2-cell and 1400 3-cell LiPo batteries)**
2914	**Battery, Power Cell AA Alkaline (4)**
2923X	**Battery, Power Cell, 3000mAh (NiMH, 7-C flat, 8.4V)**
2940X	**Battery, Series 3 Power Cell, 3300mAh (NiMH, 7-C flat, 8.4V)**
2950X	**Battery, Series 4 Power Cell, 4200mAh (NiMH, 7-C flat, 8.4V)**
2960X	**Battery, Series 5 Power Cell, 5000mAh (NiMH, 7-C flat, 8.4V)**
2983	**Battery/charger completer pack (includes #2969 2-amp NiMH peak detecting AC charger (1), #2923X 3000mAh 8.4V 7-cell NiMH battery (1))**
2992	**Battery/charger completer pack (includes #2970 iD® charger (1), #2843X 5800mAh 7.4V 2-cell 25C LiPo battery (1))**
2994	**Battery/charger completer pack (includes #2970 iD® charger (1), #2849X 4000mAh 11.1v 3-Cell 25C LiPo Battery (1))**
2991	**Battery/charger completer pack (includes #2972 Dual iD® charger (1), #2869X 7600mAh 7.4V 2-cell 25C LiPo battery (2))**
2262	**BEC, complete (includes receiver box cover and seals)**
2975	**Charger, DC, 4 amp (6 - 7 cell, 7.2 - 8.4 volt, NiMH)**
2972	**Charger, EZ-Peak® Dual, 100W, NiMH/LiPo with iD® Auto Battery Identification**
2973	**Charger, EZ-Peak® Live Dual, 200W, NiMH/LiPo with iD® Auto Battery Identification**
2971	**Charger, EZ-Peak® Live, 100W, NiMH/LiPo with iD® Auto Battery Identification**
2970	**Charger, EZ-Peak® Plus, 4 amp, NiMH/LiPo with iD® Auto Battery Identification**
6525	**Communication link, telemetry expander**
6541	**Connector, power tap (with cable) (long)/ wire tie**
6512	Cover plate, Traxxas Link™ Wireless Module
2978	**Fuse, charger, 5A (2) (for #2974, 2975, 2977)**
2064	Gear set (for 2065 waterproof sub-micro servo)
2064X	**Gear set, metal (for 2065X waterproof sub-micro servo)**
2072X	Gear set, metal (for 2070, 2075 servos)
2252	**Gear set, metal (for 2250, 2255 servos)**
2072R	**Gear set, metal, high speed (for 2070, 2075 servos)**
2968X	**LiPo cell voltage checker/balancer (includes #2938X adapter for Traxxas® iD® batteries)**
2968	**LiPo cell voltage checker/balancer (requires #2938X adapter for Traxxas® iD® batteries)**
6561	**Mount, telemetry expander**
6535	**Mount, temperature sensor (electric motors)/ wire tie/ thermal pad**
6533	Receiver, micro, TQi 2.4GHz with telemetry & TSM (5-channel)
6552	**Seal kit, expander box (includes o-ring, seals, and silicone grease)**
6526	**Sensor, auto-detectable, temperature**
6527	**Sensor, auto-detectable, voltage**
6521	**Sensor, temperature and voltage (long)**
2254	**Servo case, aluminum (blue-anodized) (middle) (for 2250 servo)**
2253	**Servo case, aluminum (red-anodized) (middle) (for 2255 servo)**
2251	**Servo case, plastic (top, middle, bottom)/ gaskets/ hardware (for 2250, 2255 servos)**
2063	Servo case/gaskets (for 2065 waterproof sub-micro servo)
2063X	**Servo case/gaskets (for 2065X metal gear, waterproof, sub-micro servo)**
2075R	**Servo, digital high-speed, metal gear (ball bearing), waterproof**
2250	**Servo, digital high-torque 330 coreless, metal gear (ball bearing), waterproof (#2262 external BEC and #8247X metal servo horn recommended for optimal performance)**
2255	**Servo, digital high-torque 400 brushless, metal gear (ball bearing), waterproof (#2262 external BEC and #8247X metal servo horn recommended for optimal performance)**
2075X	Servo, digital high-torque, metal gear (ball bearing), waterproof
2065	Servo, sub-micro, waterproof
2065X	**Servo, sub-micro, waterproof, metal gear**
6553X	**Telemetry expander 2.0 and GPS module 2.0, TQi radio system**

REV. 201020 0903

6550X **Telemetry expander 2.0, TQi radio system (for use only with #6551X GPS module)**
6551X **Telemetry GPS module 2.0, TQi radio system (for use only with #6550X telemetry expander)**
6509R **TQi 2.4 GHz High Output radio system, 2-channel, Traxxas Link™ enabled, TSM (2-ch transmitter, 5-ch micro receiver)**
6507R **TQi 2.4 GHz High Output radio system, 4-channel with Traxxas Link™ Wireless Module, TSM (4-ch transmitter, 5-ch micro receiver)**
6530 Transmitter, TQi Traxxas Link™ enabled, 2.4GHz high output, 4-channel (transmitter only)
6511 **Traxxas Link™ Wireless Module**
2261 **Y-harness, BEC**

Ready-To-Race Model

82046-4 TRX-4® Scale and Trail™ Crawler with 1979 Ford Bronco Body: 4WD Electric Truck with TQi Traxxas Link™ Enabled 2.4GHz Radio System

Scale Details

8022T **Fuel canisters (black) (2)/ 3x8 FCS (1)**
8022R **Fuel canisters (blue) (2)/ 3x8 FCS (1)**
8022 **Fuel canisters (red) (2)/ 3x8 FCS (1)**
8022X **Fuel canisters (white) (2)/ 3x8 FCS (1)**
8022A **Fuel canisters (yellow) (2)/ 3x8 FCS (1)**
8023T **Jack (black) (1)/ 2x8 BCS (1)**
8023 **Jack (red) (1)/ 2x8 BCS (1)**

Shocks (GTS)

8266 Body, GTS shock (aluminum, silver-anodized) (1)
8266X **Body, GTS shock (hard-anodized, PTFE-coated aluminum) (1)**
8266A **Body, GTS shock, aluminum (blue-anodized) (1)**
8266G **Body, GTS shock, aluminum (green-anodized) (1)**
8266R **Body, GTS shock, aluminum (red-anodized) (1)**
8264 Caps & spring retainers, GTS shocks (upper cap (2)/ hollow balls (4)/ bottom cap (2)/ upper retainer (2)/ lower retainer (2))
8274 **Hollow ball set, complete, TRX-4® (aluminum, PTFE-coated)**
5475 Multi-tool (plastic)
8261 **Piston, damper (red) (4)/ e-clips (8)**
8262 Rebuild kit, GTS shocks (x-rings, o-rings, pistons, bushings, e-clips, and rod ends)
8263 Shock shaft, 3x47mm (GTS) (2)
8263T **Shock shaft, 3x47mm (GTS) (titanium nitride-coated) (2)**
8260X **Shocks, GTS hard-anodized, PTFE-coated aluminum bodies with TiN shafts (assembled with spring retainers) (2)**
8260A **Shocks, GTS, aluminum (blue-anodized) (assembled with spring retainers) (2)**
8260G **Shocks, GTS, aluminum (green-anodized) (assembled with spring retainers) (2)**
8260R **Shocks, GTS, aluminum (red-anodized) (assembled with spring retainers) (2)**
8260 Shocks, GTS, silver aluminum (assembled with spring retainers) (2)
1666 Silicone shock oil (30 wt)

Slipper Clutch Components

8292 Input shaft/ output shaft (transmission)
8286 Output shafts (transfer case), front & rear
8254 Rebuild kit, slipper clutch (steel disc (2)/ friction insert (2)/ 4.0mm NL (1)/ spring washers (4), metal washer (1))
8249 **Slipper eliminator plate**

Springs

8042 **Springs, shock (natural finish) (GTS) (0.22 rate, yellow stripe) (2)**
8043 **Springs, shock (natural finish) (GTS) (0.30 rate, white stripe) (2)**
8044 **Springs, shock (natural finish) (GTS) (0.39 rate, orange stripe) (2)**
8041 Springs, shock (natural finish) (GTS) (0.45 rate) (2)
8040 **Springs, shock (natural finish) (GTS) (0.54 rate, green stripe) (2)**
8045 **Springs, shock (natural finish) (GTS) (0.61 rate, blue stripe) (2)**

Spur Gears & Pinion Gears

6746 **Gear, 10-T pinion (32-p) (steel)/ set screw**
6747 Gear, 11-T pinion (32-p) (steel)/ set screw
3942X **Gear, 12-T pinion (32-p), heavy duty (machined, hardened steel)/ set screw**
3943X **Gear, 13-T pinion (32-p), heavy duty (machined, hardened steel)/ set screw**
3944X **Gear, 14-T pinion (32-p), heavy duty (machined, hardened steel)/ set screw**
3945X **Gear, 15-T pinion (32-p), heavy duty (machined, hardened steel)/ set screw**
3946X **Gear, 16-T pinion (32-p), heavy duty (machined, hardened steel)/ set screw**
3947X **Gear, 17-T pinion (32-p), heavy duty (machined, hardened steel)/ set screw**
3948X **Gear, 18-T pinion (32-p), heavy duty (machined, hardened steel)/ set screw**
3949X **Gear, 19-T pinion (32-p), heavy duty (machined, hardened steel)/ set screw**
3950X **Gear, 20-T pinion (32-p), heavy duty (machined, hardened steel)/ set screw**
3951X **Gear, 21-T pinion (32-p), heavy duty (machined, hardened steel)/ set screw**
3952X **Gear, 22-T pinion (32-p), heavy duty (machined, hardened steel)/ set screw**
6745 **Gear, 9-T pinion (32-p) (steel)/ set screw**
8279 Ring gear, differential/ pinion gear, differential
8052 **Spur gear, 39-tooth (32-pitch)**
8053 Spur gear, 45-tooth (32-pitch)

Steering Components

8232 Caster blocks (portal drive), left & right/ kingpin bushings (4)
8232X **Caster blocks, 6061-T6 aluminum (blue-anodized), left and right**
8232A **Caster blocks, 6061-T6 aluminum (charcoal gray-anodized), left and right**
8232G **Caster blocks, 6061-T6 aluminum (green-anodized), left and right**
8232R **Caster blocks, 6061-T6 aluminum (red-anodized), left and right**
2072X **Gear set, metal (for 2070, 2075 servos)**
2072R Gear set, metal, high speed (for 2070, 2075 servos)
8274 **Hollow ball set, complete, TRX-4® (aluminum, PTFE-coated)**
5355 Hollow ball, tall centered (2)/ tall offset hollow ball (2)/ bump steer adjustment shims; 3.5mm (2), 1.17mm (2)
8275 Rod end set, complete (standard (10), angled 10-degrees (8), offset (4))
8276 Rod ends (10)
8277 Rod ends, angled 10-degrees (8)
2742 Rod ends, long (6)/ hollow ball connectors (6)
8278 Rod ends, offset (4)
8247X Servo horn, steering, metal/ 3x14 BCS (1)
2075R **Servo, digital high-speed, metal gear (ball bearing), waterproof**
2075X Servo, digital high-torque, metal gear (ball bearing), waterproof
5529 Shim set, 3x7x1mm (2), 3x6x0.5mm (4), 3x7x2mm (2)/ hollow balls, captured (4)
8246 Steering link, 5x60mm (1)/ draglink, 5x117mm (1) (steel)
8243 Suspension link, front, 5x100mm (lower) (steel) (2)
8244 Suspension link, front, 5x63mm (upper) (steel) (2)
8248 Suspension link, rear, 5x109mm (upper or lower) (steel) (2)
8245 **Suspension link, rear, 5x121mm (upper or lower) (steel) (2)**

Suspension Linkage

8274 **Hollow ball set, complete, TRX-4® (aluminum, PTFE-coated)**
5355 Hollow ball, tall centered (2)/ tall offset hollow ball (2)/ bump steer adjustment shims; 3.5mm (2), 1.17mm (2)
8275 Rod end set, complete (standard (10), angled 10-degrees (8), offset (4))
8276 Rod ends (10)
8277 Rod ends, angled 10-degrees (8)
2742 Rod ends, long (6)/ hollow ball connectors (6)
8278 Rod ends, offset (4)
5529 Shim set, 3x7x1mm (2), 3x6x0.5mm (4), 3x7x2mm (2)/ hollow balls, captured (4)
8243 Suspension link, front, 5x100mm (lower) (steel) (2)
8244 Suspension link, front, 5x63mm (upper) (steel) (2)
8248 Suspension link, rear, 5x109mm (upper or lower) (steel) (2)
8245 **Suspension link, rear, 5x121mm (upper or lower) (steel) (2)**

Team Traxxas Items

2514 **Decal sheet, racing sponsors**
6160X **DVD, Maxx® Power! Full Throttle Action (sleeve)**
9950 **Official Team Traxxas® racing decal set (flag logo/ 6-color)**
9909 **Traxxas® racing banner, red & black (3x7 feet)**

Tires & Wheels

8169T **Beadlock rings, black (1.9") (aluminum) (4)/ 2x10 CS (48)**
8168T **Beadlock rings, black (2.2") (aluminum) (4)/ 2x10 CS (48)**
8169X **Beadlock rings, blue (1.9") (aluminum) (4)/ 2x10 CS (48)**
8168X **Beadlock rings, blue (2.2") (aluminum) (4)/ 2x10 CS (48)**
8169G **Beadlock rings, green (1.9") (aluminum) (4)/ 2x10 CS (48)**
8168G **Beadlock rings, green (2.2") (aluminum) (4)/ 2x10 CS (48)**
8169A **Beadlock rings, orange (1.9") (aluminum) (4)/ 2x10 CS (48)**
8168A **Beadlock rings, orange (2.2") (aluminum) (4)/ 2x10 CS (48)**
8169R **Beadlock rings, red (1.9") (aluminum) (4)/ 2x10 CS (48)**
8168R **Beadlock rings, red (2.2") (aluminum) (4)/ 2x10 CS (48)**
8169 **Beadlock rings, satin (1.9") (aluminum) (4)/ 2x10 CS (48)**
8168 **Beadlock rings, satin (2.2") (aluminum) (4)/ 2x10 CS (48)**
8176 Center caps, wheel (chrome) (4)/ decal sheet (requires #8255A extended stub axle)

FORD BRONCO (82046-4)

8174	**Tires and wheels, assembled (Method 105 1.9" black chrome beadlock wheels, Canyon Trail 4.6x1.9" tires, foam inserts) (1 left, 1 right)**
8172	**Tires and wheels, assembled (Method 105 2.2" black chrome beadlock wheels, Canyon Trail 5.3x2.2" tires, foam inserts) (1 left, 1 right) (for use with TRX-4 Long Arm Lift Kit)**
8166X	**Tires and wheels, assembled, glued (1.9" chrome wheels, Canyon Trail 4.6x1.9" tires) (4)/ center caps (4)/ decal sheet (requires #8255A extended stub axle)**
8166	**Tires and wheels, assembled, glued (1.9" chrome wheels, Canyon Trail 4.6x1.9" tires) (2)/ center caps (2)/ decal sheet (requires #8255A extended stub axle)**
8177	Tires and wheels, assembled, glued (1.9" chrome wheels, Canyon Trail 4.6x1.9" tires) (2)/ center caps (2)/ decal sheet (requires #8255A extended stub axle)
8183X	**Tires and wheels, assembled, glued (1.9" classic chrome wheels, Canyon Trail 4.6x1.9" tires) (4)/ center caps (4) (requires #8255A extended stub axle)**
8273	**Tires and wheels, assembled, glued (Tactical 1.9" wheels, Canyon Trail 4.6x1.9" tires) (2)**
8272X	**Tires and wheels, assembled, glued (TRX-4® 1.9" satin beadlock wheels, Canyon Trail 4.6x1.9" tires) (2)**
8272	**Tires and wheels, assembled, glued (TRX-4® 1.9" wheels, Canyon Trail 4.6x1.9" tires) (2)**
8181	**Tires and wheels, assembled, glued (TRX-4® Sport 2.2" wheels, Canyon Trail 5.3x2.2" tires) (2) (for use with TRX-4 Long Arm Lift Kit)**
8270	**Tires, Canyon Trail 4.6x1.9" (S1 compound)/ foam inserts (2)**
8170	**Tires, Canyon Trail 5.3x2.2"/ foam inserts (2) (for use with TRX-4 Long-Arm Lift Kit)**
8269	Wheel hubs, 12mm hex (2)/ stub axle pins (2) (steel)
8269X	**Wheel hubs, 12mm hex, 6061-T6 aluminum (blue-anodized) (4)/ screw pin (4)**
8269A	**Wheel hubs, 12mm hex, 6061-T6 aluminum (charcoal gray-anodized) (4)/ screw pin (4)**
8269G	**Wheel hubs, 12mm hex, 6061-T6 aluminum (green-anodized) (4)/ screw pin (4)**
8269R	**Wheel hubs, 12mm hex, 6061-T6 aluminum (red-anodized) (4)/ screw pin (4)**
8175	Wheels, 1.9", chrome (2)/ center caps (2)/ decal sheet (requires #8255A extended stub axle)
8173	**Wheels, Method 105 1.9" (black chrome, beadlock) (beadlock rings sold separately)**
8173A	**Wheels, Method 105 1.9" (charcoal gray, beadlock) (beadlock rings sold separately)**
8171	**Wheels, Method 105 2.2" (black chrome, beadlock) (beadlock rings sold separately) (for use with TRX-4 Long Arm Lift Kit)**
8171A	**Wheels, Method 105 2.2" (charcoal gray, beadlock) (beadlock rings sold separately) (for use with TRX-4 Long Arm Lift Kit)**
8268	**Wheels, Tactical 1.9 (2)**
8271	**Wheels, TRX-4® 1.9 (2)**
8271X	**Wheels, TRX-4® 1.9 (satin beadlock) (2)**

Transmission Components

8283	Cable, T-lock (front)
8284	Cable, T-lock (rear)
8289	Drive hub, 2-speed/ shift dog/ shift fork/ 2-speed linkage
8293X	**Gear set, transmission, metal (includes 18T, 30T input gears, 36T output gear, 2x9.8 pins (5))**
8291	Gearbox housing (includes main housing, front housing, & cover)
8285	Gears, transfer case (3)
5041	Grease, premium high performance (20cc)
8292	Input shaft/ output shaft (transmission)
8290X	**Motor mount plate, 6061-T6 aluminum (blue-anodized)**
8290A	**Motor mount plate, 6061-T6 aluminum (charcoal gray-anodized)**
8290G	**Motor mount plate, 6061-T6 aluminum (green-anodized)**
8290R	**Motor mount plate, 6061-T6 aluminum (red-anodized)**
8295	Output drive, transmission or differential (pin retainer (1)/ drive cup (1)/ drive ball (1)/ drive pin (1)/ 3x11 screw pin (1)/ cross pin (black) (1) 3x6 BCS with threadlock (1))
8294	Output gear, high range, 24T (metal)
8286	Output shafts (transfer case), front & rear
8290	Plate, motor/ upper spur gear cover
8249	**Slipper eliminator plate**
8296	**Transmission gears, single speed, metal**

Traxxas Tools

3433X	**Body reamer (aluminum handle)**
3433	**Body reamer (plastic handle)**
3436	**Cap, body reamer**
3432	**Scissors, curved tip**
3431	**Scissors, straight tip**
8712	**Speed Bit Essentials Set, hex and nut driver, 7-piece, includes premium handle (medium), travel pouch, hex drivers (straight: 1.5mm, 2.0mm, 2.5mm) and nut drivers (5.0mm, 5.5mm, 7.0mm, and 8.0mm), 1/4" drive**
8721	**Speed bit handle, medium (one piece)**
8720	**Speed bit handle, premium, large (rubber overmold)**
8722	**Speed bit handle, premium, medium (rubber overmold)**
8710	**Speed Bit Master Set, hex and nut driver, 13-piece, includes premium handle (medium), travel pouch, hex drivers (straight: 1.5mm, 2.0mm, 2.5mm, 3.0mm), (ball-end: 2.0mm, 2.5mm, 3.0mm), and nut drivers (4.00mm, 4.50mm, 5.00mm, 5.50mm, 7.00mm, 8.00mm),**
8711	**Speed Bit Master Set, hex driver, 7-piece straight and ball end, includes premium handle (medium), travel pouch, hex drivers (straight: 1.5mm, 2.0mm, 2.5mm, 3.0mm) (ball end: 2.0mm, 2.5mm, 3.0mm), 1/4" drive**
8719	**Speed Bit Master Set, nut driver, 6-piece, includes premium handle (medium), travel pouch, and nut drivers (4.0mm, 4.5mm, 5.0mm, 5.5mm, 7.0mm, 8.0mm), 1/4" drive**
8716	**Speed Bit Set, hex driver, 2-piece ball-end (2.0mm, 2.5mm), 1/4" drive**
8716X	**Speed Bit Set, hex driver, 3-piece ball-end (2.0mm, 2.5mm, 3.0mm), 1/4" drive**
8715	**Speed Bit Set, hex driver, 3-piece straight (1.5mm, 2.0mm, 2.5mm), 1/4" drive**
8715X	**Speed Bit Set, hex driver, 4-piece straight (1.5mm, 2.0mm, 2.5mm, 3.0mm), 1/4" drive**
3415	**Tool set with pouch (includes 1.5mm, 2.0mm, 2.5mm, 3.0mm, 3.5mm, 4mm drivers/ 4mm, 5mm, 5.5mm, 7mm and 8mm nut drivers/ 2mm, 4mm, and 5mm slotted screwdrivers/ #00 Phillips, #0 Phillips, and #1 Phillips screwdrivers/ 4mm and 8mm wrench/ driver handle**

TRX-4® Traxx™

8889	**Bearing retainers, inner (2), outer (2)**
8890	**Drive wheel (1)**
8885	**Shock mounts (frame, left (2), frame, right (2))/ portal mounts (1 each, front (left & right), rear (left & right))**
8888	**Spring (4)**
8887	**Stub axle (1)**
8886	**Stub axle nut (4)**
8891	**Tension wheels (6)/ road wheels (4)**
8881	**Traxx™, front, left (assembled) (requires #8886 stub axle, #7061 GTR shock, & #8878 or #8895 rubber track)**
8882	**Traxx™, front, right (assembled) (requires #8886 stub axle, #7061 GTR shock, & #8878 or #8895 rubber track)**
8883	**Traxx™, rear, left (assembled) (requires #8886 stub axle, #7061 GTR shock, & #8879 or #8896 rubber track)**
8884	**Traxx™, rear, right (assembled) (requires #8886 stub axle, #7061 GTR shock, & #8879 or #8896 rubber track)**
8880	**Traxx™, TRX-4® (4) (complete set, front & rear)**
8895	**Treads, All-Terrain, TRX-4® Traxx™ (front, left or right) (rubber) (1)**
8896	**Treads, All-Terrain, TRX-4® Traxx™ (rear, left or right) (rubber) (1)**

If you have questions or need technical assistance, call Traxxas at:

1-888-TRAXXAS

(1-888-872-9927) (U.S. residents only)

For orders, calls outside the U.S., and other information, call 972-549-3000, or fax to 972-549-3011 e-mail Traxxas at support@Traxxas.com

TRAXXAS.com

REV. 201020 0903

LAND ROVER

ABOVE & BEYOND

DEFENDER

MODEL 82056-4

4WD ELECTRIC
SCALE & TRAIL CRAWLER



TQi 2.4GHz TRANSMITTER

TITAN 21T 550 MOTOR AND XL-5 HV ELECTRONIC SPEED CONTROL

GTS ALUMINUM SHOCKS

TAKE THE PATH LESS TRAVELED

The Traxxas TRX-4 Scale and Trail Crawler is an all-new Traxxas design that is loaded with innovation that instantly obsoletes the status quo with exciting new features, versatility, and capability. In other words, we built it the Traxxas way, rugged, powerful, and ready for fun!

Underneath the authentic scale look is a machine built for extreme off-road capability that takes you to new places and new adventures. Exclusive portal axles deliver maximum ground clearance that dramatically turns "no way" into "no problem." Whether you are enjoying outdoor trails or getting technical on the rocks, the remote-locking front and rear differentials and high/low range transmission provide unmatched driving versatility.

Land Rover and the Land Rover Logo are trademarks owned and licensed by Jaguar Land Rover Limited

TRX-4 Front Assembly

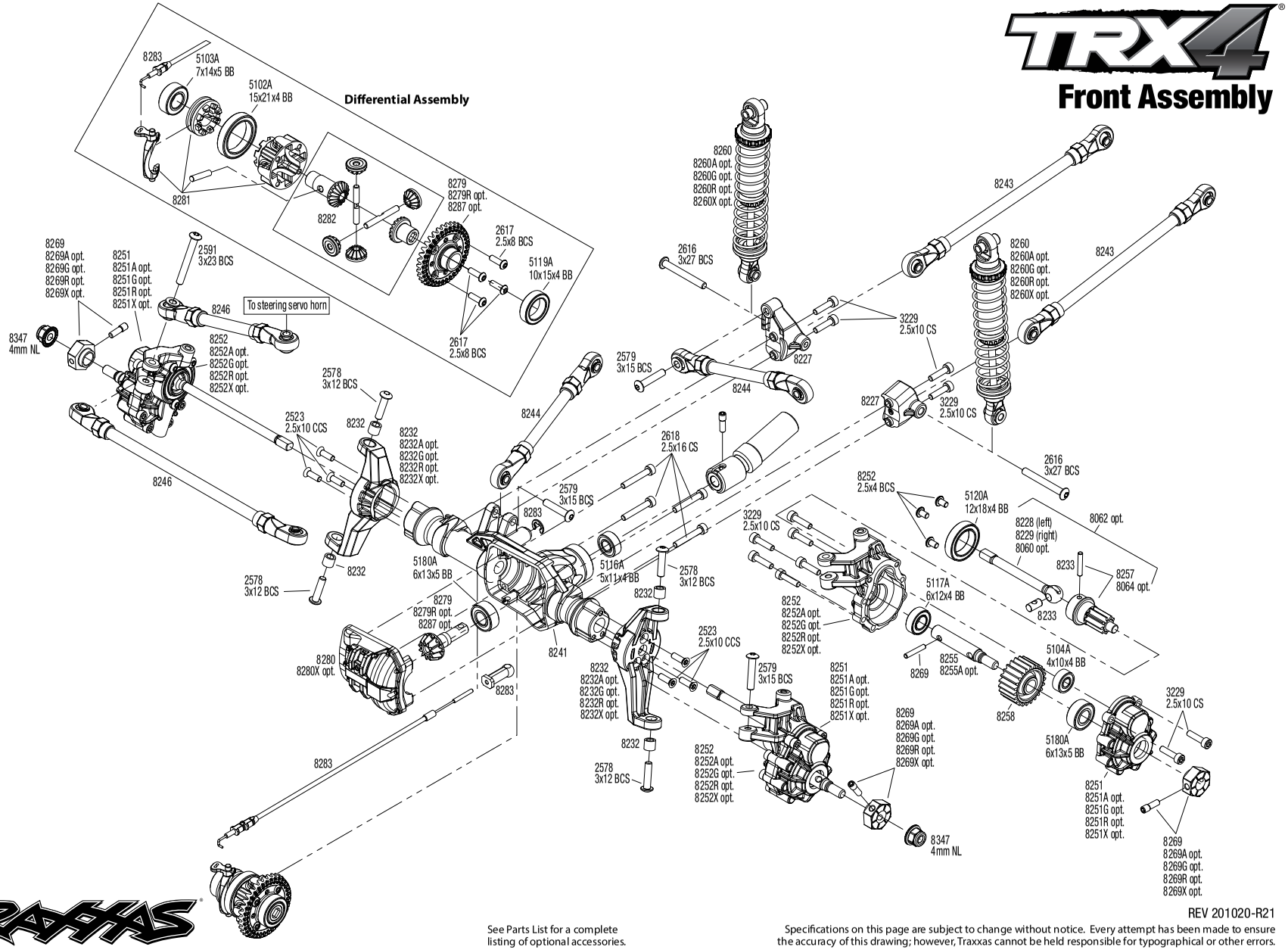

REV 201020-R21

See Parts List for a complete listing of optional accessories.

Specifications on this page are subject to change without notice. Every attempt has been made to ensure the accuracy of this drawing; however, Traxxas cannot be held responsible for typographical or other errors.

TRX-4

Chassis Assembly

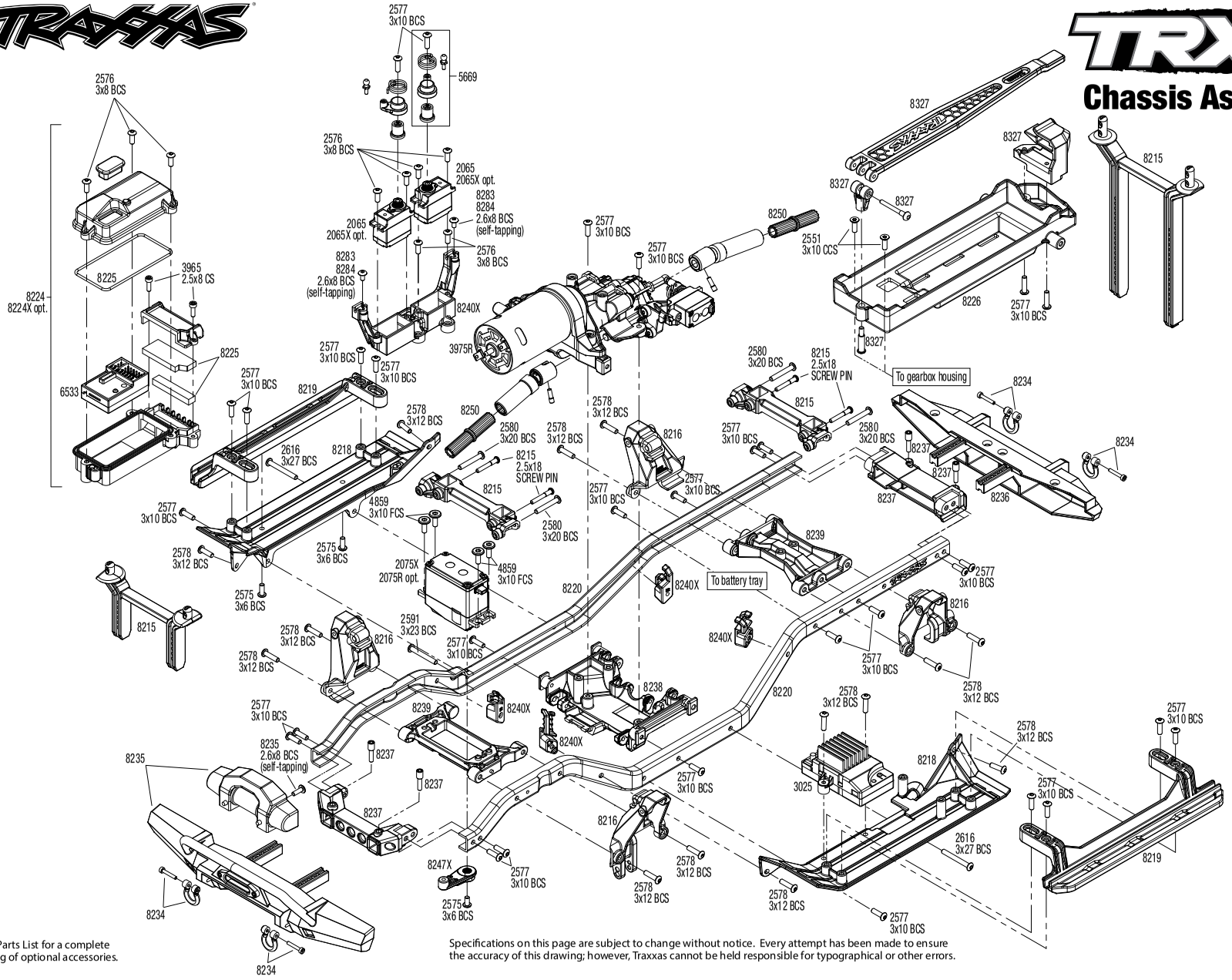

See Parts List for a complete listing of optional accessories.

Specifications on this page are subject to change without notice. Every attempt has been made to ensure the accuracy of this drawing; however, Traxxas cannot be held responsible for typographical or other errors.

REV 201020-R21

TRAXXAS

TRX4

Rear Assembly

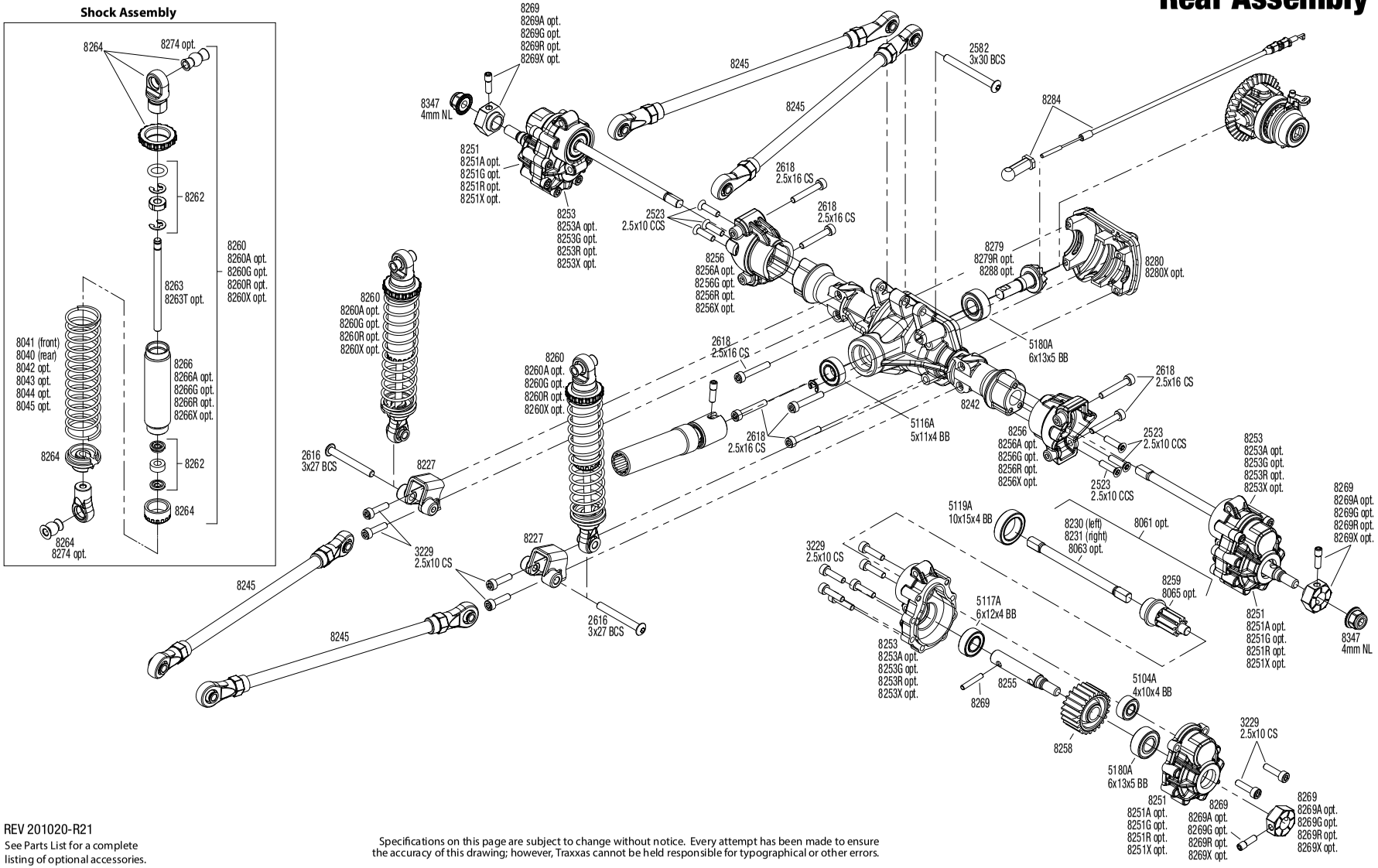

REV 201020-R21

See Parts List for a complete listing of optional accessories.

Specifications on this page are subject to change without notice. Every attempt has been made to ensure the accuracy of this drawing; however, Traxxas cannot be held responsible for typographical or other errors.

Transmission Assembly

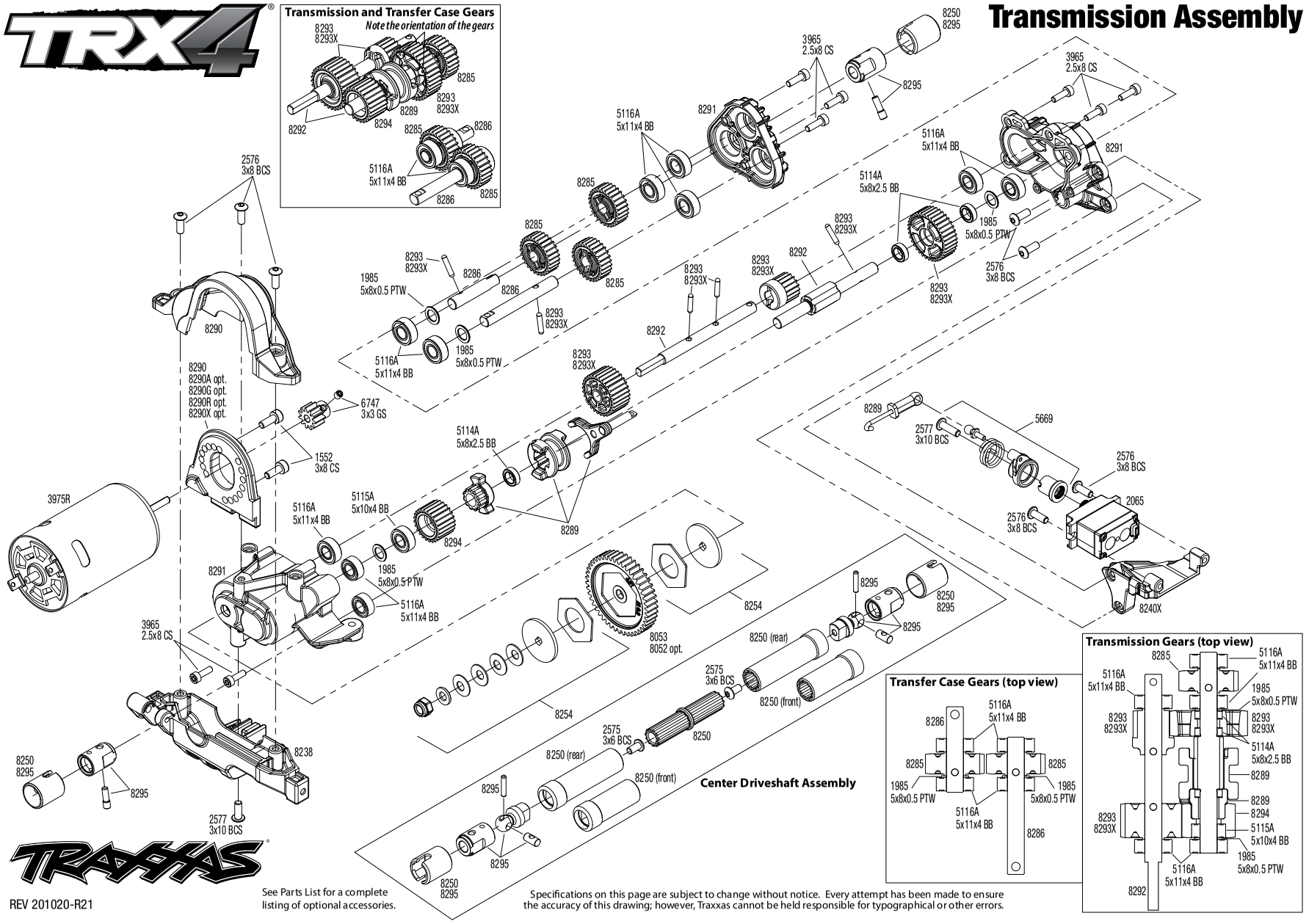

See Parts List for a complete listing of optional accessories.

Specifications on this page are subject to change without notice. Every attempt has been made to ensure the accuracy of this drawing; however, Traxxas cannot be held responsible for typographical or other errors.

REV 201020-R21

Link Dimensions

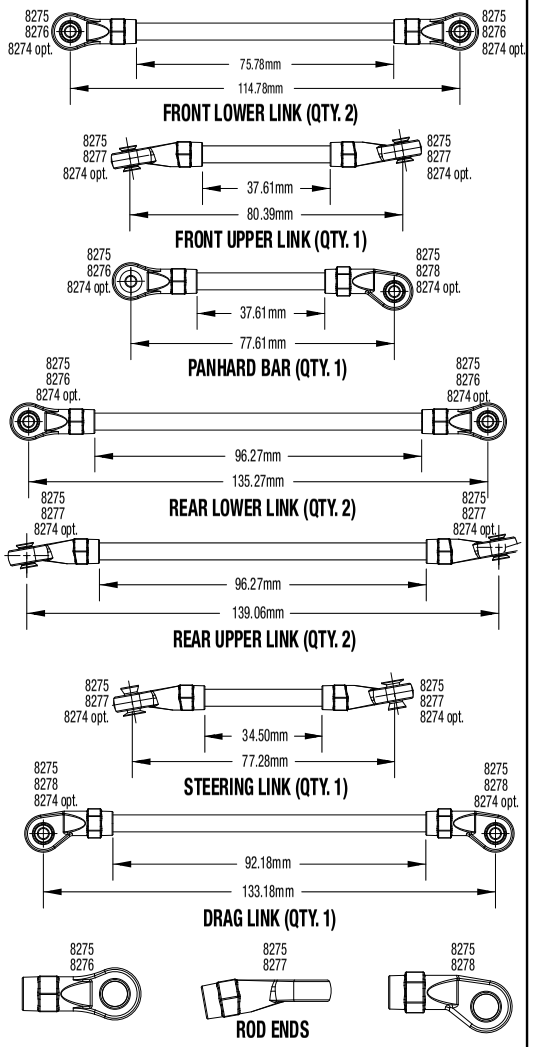

For standard hollow ball replacement, use part #5349.

Modular Assembly

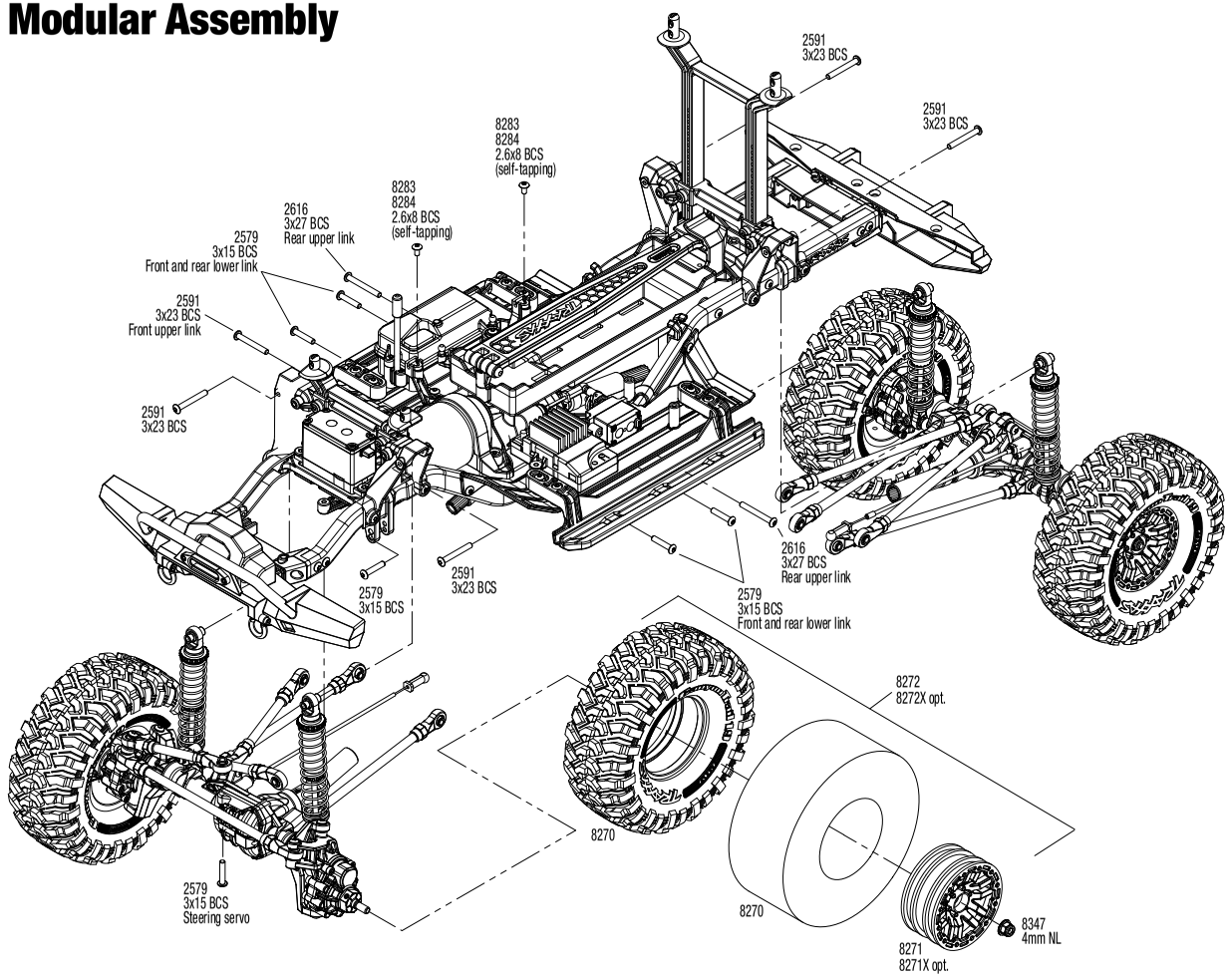

See Parts List for a complete listing of optional accessories.

REV 201020-R21

Specifications on this page are subject to change without notice. Every attempt has been made to ensure the accuracy of this drawing; however, Traxxas cannot be held responsible for typographical or other errors.

DEFENDER (82056-4)

TRX-4 Body Assembly

3647
4mm NL
8272
3236
2.5x12 CS
8022
8022T opt.
8022A opt.
8022R opt.
8022A opt.
3931
3x8 FCS
8022
8022T opt.
8022A opt.
8022R opt.
8022X opt.
8023
2x8 BCS
8023
3236
2.5x12 CS
8021
8021
4x15 HEX
8021
8021
4x5 SCREW PIN
2617
2.5x8 BCS
8014
2617
2.5x8 BCS
8014
8016
3215
2.5x6 CS
8016
3215
2.5x6 CS
8016
3215
2.5x6 CS
8020
8020
T3x10 BCS
(self-tapping)
8020
8020
T3x10 BCS
(self-tapping)
8020
3215
2.5x6 CS
8011R
8011X
8011A opt.
8011G opt.
8011T opt.
2617
2.5x8 BCS
8013
2576
3x8 BCS
8013
8013
8013
8013
8013
8013
8013
8013
8013
8016
3215
2.5x6 CS
8016
3215
2.5x6 CS
8020
3965
2.5x8 CS
8020
T3x10 BCS
(self-tapping)
3215
2.5x6 CS
8020
8020
8020
3965
2.5x8 CS
2617
2.5x8 BCS
8013
8013
8019
8018
8018
8018

PARTS SHOWN IN BOLD ARE OPTIONAL ACCESSORIES.

Part categories and individual part listings are arranged alphabetically.

Axle Components

8241 Axle housing, front
8242 Axle housing, intermediate (TRX-6™) or rear (TRX-4®)
8227 Axle mount set (complete) (front & rear) (for suspension links)
8228 Axle shaft, front (left)/ drive pin/ cross pin
8229 Axle shaft, front (right)/ drive pin/ cross pin
8060 Axle shaft, front, heavy duty (left & right) (requires #8064 front portal drive input gear)
8062 Axle shaft, front, heavy duty (left & right)/ portal drive input gear (machined) (2) (assembled)
8230 Axle shaft, rear (left)
8231 Axle shaft, rear (right)
8061 Axle shaft, rear, heavy duty (left & right)/ portal drive input gear, rear (machined)
8063 Axle, rear, heavy duty (left & right) (requires #8065 rear portal drive input gear)
8233 Cross pin (2)/ drive pin (2) (to rebuild front axle shafts)
8256 Portal drive axle mount, rear (left & right)
8256X Portal drive axle mount, rear, 6061-T6 aluminum (blue-anodized) (left and right)/ 2.5x16 CS (4)
8256A Portal drive axle mount, rear, 6061-T6 aluminum (charcoal gray-anodized) (left and right)/ 2.5x16 CS (4)
8256G Portal drive axle mount, rear, 6061-T6 aluminum (green-anodized) (left and right)/ 2.5x16 CS (4)
8256R Portal drive axle mount, rear, 6061-T6 aluminum (red-anodized) (left and right)/ 2.5x16 CS (4)
8252 Portal drive housing, inner, front (left & right)/ 2.5x4 BCS (6)
8253 Portal drive housing, inner, rear (left or right) (2)
8251 Portal drive housing, outer (front or rear) (2)
8064 Portal drive input gear, front (machined) (left or right) (requires #8060 front axle shaft)
8257 Portal drive input gear, front/ drive pin/ cross pin
8259 Portal drive input gear, rear
8065 Portal drive input gear, rear (machined) (left or right) (requires #8063 rear axle)
8258 Portal drive output gear, front or rear
8252X Portal housings, inner (front), 6061-T6 aluminum (blue-anodized) (2)/ 3x12 BCS (2)
8252A Portal housings, inner (front), 6061-T6 aluminum (charcoal gray-anodized) (2)/ 3x12 BCS (2)
8252G Portal housings, inner (front), 6061-T6 aluminum (green-anodized) (2)/ 3x12 BCS (2)
8252R Portal housings, inner (front), 6061-T6 aluminum (red-anodized) (2)/ 3x12 BCS (2)
8253X Portal housings, inner (rear), 6061-T6 aluminum (blue-anodized) (2)/ 2.5x10 CS (2)
8253A Portal housings, inner (rear), 6061-T6 aluminum (charcoal gray-anodized) (2)/ 2.5x10 CS (2)
8253G Portal housings, inner (rear), 6061-T6 aluminum (green-anodized) (2)/ 2.5x10 CS (2)
8253R Portal housings, inner (rear), 6061-T6 aluminum (red-anodized) (2)/ 2.5x10 CS (2)
8251X Portal housings, outer, 6061-T6 aluminum (blue-anodized) (2)/ 2.5x10 CS (12)
8251A Portal housings, outer, 6061-T6 aluminum (charcoal gray-anodized) (2)/ 2.5x10 CS (12)
8251G Portal housings, outer, 6061-T6 aluminum (green-anodized) (2)/ 2.5x10 CS (12)
8251R Portal housings, outer, 6061-T6 aluminum (red-anodized) (2)/ 2.5x10 CS (12)
8255 Stub axle (portal drive) (2)
8255A Stub axle, extended (portal drive) (2)
8267 Weight, portal housing, brass (34 grams) (2)/ 2.5x8 CS (6) (requires #8251X, 8251R, 8251A, or 8251G outer portal housing)

Bearings & Bushings

5119A Ball bearings, black rubber sealed (10x15x4mm) (2)
5120A Ball bearings, black rubber sealed (12x18x4mm) (2)
5104A Ball bearings, black rubber sealed (4x10x4mm) (2)
5115A Ball bearings, black rubber sealed (5x10x4mm) (2)
5116A Ball bearings, black rubber sealed (5x11x4mm) (2)
5114A Ball bearings, black rubber sealed (5x8x2.5mm) (2)
5117A Ball bearings, black rubber sealed (6x12x4mm) (2)
5180A Ball bearings, black rubber sealed (6x13x5mm) (2)
5103A Ball bearings, black rubber sealed (7x14x5mm) (2)

Body (1969 Chevrolet Blazer)

9112 Body, Chevrolet Blazer (1969 - 1970) (clear, requires painting) (includes grille, side mirrors, door handles, windshield wipers, decals, window masks)
9112X Body, Chevrolet Blazer (1969), complete (black) (includes grill, side mirrors, door handles, windshield wipers, front & rear bumpers, decals)
9125 Bumper pads/ bumper guards (chrome)/ 2.5x10 BCS (4)/ 2.7mm drill bit (fits #9126 or #9127 front bumpers)
9127 Bumper, front (chrome)/ bumper mount/ 3x10 BCS (2)
9124 Bumper, rear (chrome)/ bumper mount/ 3x10 BCS (2)
9113 Decal sheets, Chevrolet Blazer (1969 -1972)
9115 Door handles, left, right, and rear/ retainers (3)/ windshield wipers, left & right/ retainer (1)/ fuel cap/ fuel flange/ fuel cap mount/ 1.6x5 BCS (self-tapping) (7)/ 2.6x8 BCS (1)
9123 Grille, Chevrolet Blazer (1969 - 1970)/ grille retainers (5)/ headlight housing (2)/ headlight lens (2)/ turn signal lens (2)/ hood emblem/ hood emblem mount/ 2.6x8 BCS (5)/ 2.5x6 BCS (4)/ 1.6x5 BCS (self-tapping) (2) (fits #9112 body)
9116 Marker light housing (4)/ marker light mount (4)/ marker light lens (red (2), amber (2))/ reverse lens (left & right)/ 1.6x5 BCS (self-tapping) (8)
9121 Mirrors, side, chrome (left & right)/ o-rings (4)/ body clips (4) (fits #9112 body)
9122 Tail light housing, black (2)/ lens (2)/ retainers (left & right)/ 2.6x8 BCS (self-tapping) (4)

Body (1972 Chevrolet Blazer)

9111 Body, Chevrolet Blazer (1972) (clear, requires painting) (includes grille, side mirrors, side trim, door handles, windshield wipers, decals, window masks)
9111X Body, Chevrolet Blazer (1972), complete (blue) (includes grille, side mirrors, door handles, windshield wipers, front & rear bumpers, decals)
9125 Bumper pads/ bumper guards (chrome)/ 2.5x10 BCS (4)/ 2.7mm drill bit (fits #9126 or #9127 front bumpers)
9126 Bumper, front (chrome)/ bumper mount/ lens (left and right) (2)/ lens mount (left and right) (2)/ 3x10 BCS (2)/ 2.6x6 BCS (4)
9124 Bumper, rear (chrome)/ bumper mount/ 3x10 BCS (2)
9113 Decal sheets, Chevrolet Blazer (1969 -1972)
9115 Door handles, left, right, and rear/ retainers (3)/ windshield wipers, left & right/ retainer (1)/ fuel cap/ fuel flange/ fuel cap mount/ 1.6x5 BCS (self-tapping) (7)/ 2.6x8 BCS (1)
9120 Grille, Chevrolet Blazer (1972)/ grille retainers (5)/ headlight housing (2)/ lens (2)/ 2.6x8 BCS (5)/ 2.5x6 BCS (4) (fits #9111 body)
9116 Marker light housing (4)/ marker light mount (4)/ marker light lens (red (2), amber (2))/ reverse lens (left & right)/ 1.6x5 BCS (self-tapping) (8)
9118 Mirrors, side, chrome (left & right)/ o-rings (4)/ body clips (4) (fits #9111 body)
9117 Side trim, Chevrolet Blazer (1972), left & right/ rear trim, upper & lower/ retainers, left, right & rear/ 2.6x8 BCS (23)/ 1.6x5 BCS (self-tapping) (5) (fits #9111 body)
9119 Tail light housing, chrome (2)/ lens (2)/ retainers (left & right)/ 2.6x8 BCS (self-tapping) (4)

Body (1979 Chevrolet Blazer)

8130 Body, Chevrolet Blazer (1979) (clear, requires painting)/ window masks
8130G Body, Chevrolet Blazer (1979) (orange) (requires grille, side mirrors, door handles, windshield wipers, decals)
8130A Body, Chevrolet Blazer (1979) (red) (requires grille, side mirrors, door handles, windshield wipers, decals)
8130X Body, Chevrolet Blazer (1979), complete (orange) (includes grille, side mirrors, door handles, windshield wipers, front & rear bumpers, decals)
8130R Body, Chevrolet Blazer (1979), complete (red) (includes grille, side mirrors, door handles, windshield wipers, front & rear bumpers, decals)
8131 Decal sheet, Chevrolet Blazer (1979)
8132 Door handles, left, right & rear tailgate/ windshield wipers, left & right/ retainers (2)/ 1.6x5 BCS (self-tapping) (7) (fits #8130 body)
8134 Grille, Chevrolet Blazer (1979)/ grille retainers (4)/ headlight housing (2)/ lens (2)/ 2.6x8 BCS (4)/ 2.5x6 BCS (2) (fits #8130 body)
8133X Mirrors, side (folding) (fits #8130 body)
8133 Mirrors, side, chrome (left & right)/ o-rings (4)/ body clips (4) (fits #8130 body)

DEFENDER (82056-4)

8135	**Tail lights, left & right (assembled)/ tail light retainers, left & right/ side marker lights (assembled) (2)/ side marker retainers (2)/ mounting tape (2)/ 1.6x5 BCS (self-tapping) (4)/ 2.6x8 BCS (2) (fits #8130 body)**

Body (1979 Ford Bronco)

8010	**Body, Ford Bronco (1979) (clear, requires painting)/ decals/ window masks/ tailgate panel insert/ adhesive foam tape (2)**
8010X	**Body, Ford Bronco (1979), complete (black) (includes front and rear bumpers, push bar, rear body mount, grille, side mirrors, door handles, windshield wipers, spare tire mount, red and sunset decals) (requires #8072 inner fenders)**
8078R	**Decal sheet, Bronco, red (fits #8010 body)**
8078	**Decal sheet, Bronco, sunset (fits #8010 body)**
8075	**Door handles, left & right/ windshield wipers, left & right/ retainers (3)/ 1.6x5 BCS (self-tapping) (4) (fits #8010 body)**
8070	**Grille, Ford Bronco/ grille retainers (6)/ headlight housing (2)/ lens (2)/ 2.6x8 BCS (6)/ 2.5x6 BCS (2) (fits #8010 body)**
8073	**Mirrors, side, black (left & right)/ retainers (2)/ body clips (4) (fits #8010 body)**
8073X	**Mirrors, side, chrome (left & right)/ retainers (2)/ body clips (4) (fits #8010 body)**
8076	**Side trim, left & right (chrome)/ retainers/ LED lens/ 2.6x8 BCS (24) (fits #8010 body)**
8074	**Spare tire mount/ mounting bracket/ spare tire cover/ mounting hardware**
8077	**Tailgate panel insert (clear, requires painting)/ adhesive foam tape (2) (fits #8010 body)**
8071	**Tailgate panel/ tail light lens (2) (left & right) (fits #8010 body)**

Body (Land Rover Defender)

8011	**Body, Land Rover® Defender® (clear, trimmed, requires painting)/ window masks/ decal sheet**
8011A	**Body, Land Rover® Defender®, adventure orange (complete with ExoCage, inner fenders, fuel canisters, and jack)**
8011X	Body, Land Rover® Defender®, graphite silver (painted)/ decals
8011R	Body, Land Rover® Defender®, red (painted)/ decals
8012	Decals, Land Rover® Defender®
8016	ExoCage (complete with assembly hardware; #8015 roof basket sold separately) (fits #8011 body)
8019	Fender brace, inner, front & rear
8017	Fender flares, front & rear (2 each) (fits #8011 or #8211 body)
8018	Fenders, inner, front & rear (2 each)/ rock light covers (8)
8013	Grille, Land Rover® Defender®/ grille mount (3)/ headlight housing (2)/ lens (2)/ headlight mount (2) (fits #8011 body)
8020	Mirrors, side (left & right)/ snorkel/ mounting hardware (fits #8011 body)
8015	Roof basket (requires #8016 ExoCage) (fits #8011 body)
8021	Spare tire mount/ mounting bracket/ screw pins (2)
8014	Tail light housing (2)/ lens (2)/ decals (left & right) (fits #8011 body)

Body (Mercedes-Benz® G 500®)

8811	**Body, Mercedes-Benz® G 500® 4x4² (clear, requires painting)/ decals/ window masks (includes rear body post, grille, side mirrors, door handles, & windshield wipers)**
8812	**Decals, Mercedes-Benz® G 500® 4x4²**
8813X	**Grille, Mercedes-Benz® G 500® 4x4²/ grille mount/ grille insert/ headlight lens (2)/ headlight reflector (2)/ reflector lens (2)/ bumperette front (2)/ bumperette mount (2)/ turn signal housing (2)/ turn signal housing retainer (2)/ turn signal len**
8817	**Mirrors, side, black (left & right)/ o-rings (4)/ windshield wipers, left, right, & rear/ wiper retainers (2)/ body clips (4)/ 1.6x5 BCS (self-tapping) (3)**
8822	**Roof visor/ visor retainer/ visor lens (2)/ 2.6x6 BCS (3)/ 3x4 GS (4)**
8816X	**Side marker light housing (2)/ mount (2)/ lens (2)/ 1.6x7 BCS (self-tapping) (2)**
8814X	**Tail light lens (2)/ tail light housing (2)/ tail light housing mount (2)/ reverse lens (2)/ 1.6x5 BCS (4) (left & right)**

Body (Tactical Unit)

8211X	**Body, Tactical Unit, night camo (painted)/ decals**
8019	Fender brace, inner, front & rear
8017	Fender flares, front & rear (2 each) (fits #8011 or #8211 body)
8018	Fenders, inner, front & rear (2 each)/ rock light covers (8)
8020	**Mirrors, side (left & right)/ snorkel/ mounting hardware (fits #8011 body)**
8021	Spare tire mount/ mounting bracket/ screw pins (2)

Body (TRX-4® Sport)

8112	**Body with camper, TRX-4® Sport (clear, trimmed, requires painting)/ window masks/ decal sheet**
8111R	**Body, TRX-4® Sport (clear, trimmed, die-cut for LED light kit, requires painting)/ window masks/ decal sheet**
8111	**Body, TRX-4® Sport (clear, trimmed, requires painting)/ window masks/ decal sheet**
8113	**Decal sheet, TRX-4® Sport**
8120X	**Expedition rack, complete (includes traction boards, shovel, axe, jack, fire extinguisher, fuel cans, & mounting hardware) (fits #8111 or #8111R body)**
8120	**Expedition rack/ mounting hardware (fits #8111 or #8111R body)**
8116	**Grille/ grille retainers (2)/ grille mount/ lens (2)/ 2.5x8 BCS (6) (fits #8111 or #8112 body)**
8119	**Mirrors, side (left & right)/ snorkel/ mounting hardware (fits #8111 or #8112 body)**
8122	**Shovel/ axe/ accessory mount/ mounting hardware**
8118	**Spare tire mount/ mounting hardware**
8117	**Tailgate panel/ tailgate retainers (2)/ tailgate mount/ tail light lens (2) (left & right)/ 2.5x8 BCS (4) (fits #8111 or #8112 body)**
8121X	**Traction boards, blue/ mounting hardware**
8121G	**Traction boards, green/ mounting hardware**
8121A	**Traction boards, yellow/ mounting hardware**
8121	**Traction boards/ mounting hardware**

Body Accessories

1926	**Antenna caps, vinyl (2)/ antenna spool**
1726	Antenna, tube (1)/ vinyl antenna cap (1)/ wire retainer (1)
1834	Body clips (12) (standard size)
1834A	**Body clips, black (12) (standard size)**
3934	**Body clips, heavy duty (12)**
3934A	**Body clips, heavy duty (black) (12)**
8215	Body mounts & posts, front & rear (complete set)
4915	Body washers, foam adhesive (10)
2514	**Decal sheet, racing sponsors**
8081	**Fender extensions (4)/ 3x8 flat-head screws (24) (requires #8080 narrow inner fenders)**
8080	**Fenders, inner (narrow), front & rear (2 each)/ rock light covers (8)/ battery plate/ 3x8 flat-head screws (4)**
8072	**Fenders, inner, front & rear (2 each)/ rock light covers (8)/ battery plate/ 3x8 flat-head screws (4)**
9950	**Official Team Traxxas® racing decal set (flag logo/ 6-color)**

Bumpers & Skidplates

8234	Bumper D-Rings, grey (front or rear)/ 2x12 CS (4)
8234R	**Bumper D-rings, red (front or rear)/ 2.0x12 CS (4)**
8067	**Bumper mounts, front & rear**
8237	Bumper mounts, front & rear/ screw pins (4)
8069	**Bumper, front (chrome)/ bumper mount/ 3x10 BCS (2)**
8235	Bumper, front/ winch
8236	Bumper, rear
8068	**Bumper, rear (chrome)/ bumper mount/ 3x10 BCS (2)**
8066	**Push bar, bumper (chrome) (fits #8069 bumper)**
8238	Skidplate/ lower gear cover

Chassis & Attachments

8215	Body mounts & posts, front & rear (complete set)
8224	Box, receiver (sealed)/ wire cover/ foam pads/ silicone grease/ 3x8 BCS (5)/ 2.5x8 CS (2)
8058	**Chassis conversion kit, TRX-4® (long to short wheelbase) (includes rear upper & lower suspension links, front & rear inner fenders, short female half shaft, battery tray, 3x8mm FCS (4))**
8057	**Chassis conversion kit, TRX-4® (short to long wheelbase) (includes rear upper & lower suspension links, front & rear shock towers, long female half shaft)**
8220	Chassis rails, 448mm (steel) (left & right)
8072	**Fenders, inner, front & rear (2 each)/ rock light covers (8)/ battery plate/ 3x8 flat-head screws (4)**
8218	Floor pans, left & right
8224X	**Receiver box cover (for use only with #8224 receiver box & #2260 BEC)/ foam pads/ seals/ silicone grease**
8219	Rock sliders, left & right
8225	**Seal kit, receiver box (includes o-ring, seals, and silicone grease)**
8240X	Servo mount, 2-speed/ servo mount, T-Lock/ wire clips
8239	Servo mount, steering/ chassis crossmember
8216	Shock towers, front & rear (left & right)
8226	Tray, battery

Differential Components

8281	Carrier, differential/ differential slider/ T-Lock fork
8280A	**Differential cover, front or rear (black)**
8280X	**Differential cover, front or rear (chrome-plated)**
8280	Differential cover, front or rear (grey)
8280R	**Differential cover, front or rear (red)**
8282	Gear set, differential (output gears (2), spider gears (4), spider gear shaft (2))

8295	Output drive, transmission or differential (pin retainer (1)/ drive cup (1)/ drive ball (1)/ drive pin (1)/ 3x11 screw pin (1)/ cross pin (black) (1) 3x6 BCS with threadlock (1))
8279	Ring gear, differential/ pinion gear, differential
8279R	**Ring gear, differential/ pinion gear, differential (machined)**
8287	**Ring gear, differential/ pinion gear, differential (overdrive, machined)**
8288	**Ring gear, differential/ pinion gear, differential (underdrive, machined)**
8297	**Spool/ differential housing plug/ e-clip**

Driveline Components

8250	Half shafts, center (internal splined, front (2) & internal splined, rear (2)/ external splined (2)/ pin retainer (4)) (plastic parts only)
8255	Stub axle (portal drive) (2)
8255A	**Stub axle, extended (portal drive) (2)**
8269	Wheel hubs, 12mm hex (2)/ stub axle pins (2) (steel)
8269X	**Wheel hubs, 12mm hex, 6061-T6 aluminum (blue-anodized) (4)/ screw pin (4)**
8269A	**Wheel hubs, 12mm hex, 6061-T6 aluminum (charcoal gray-anodized) (4)/ screw pin (4)**
8269G	**Wheel hubs, 12mm hex, 6061-T6 aluminum (green-anodized) (4)/ screw pin (4)**
8269R	**Wheel hubs, 12mm hex, 6061-T6 aluminum (red-anodized) (4)/ screw pin (4)**

Hardware

1552	Backplate screws (3x8mm cap-head machine) (6)/washers (6)/ wrench
1834	Body clips (12) (standard size)
1834A	**Body clips, black (12) (standard size)**
3934	**Body clips, heavy duty (12)**
3934A	**Body clips, heavy duty (black) (12)**
8167X	**Hardware kit, stainless steel, beadlock rings (contains stainless steel hardware for 4 wheels)**
8298	**Hardware kit, stainless steel, TRX-4® (contains all stainless steel hardware used on TRX-4)**
8151	**Hardware kit, stainless steel, TRX-4® High Lift Kit (contains all stainless steel hardware used on TRX-4® Long Arm Lift Kit)**
5476X	**Hex wrenches; 1.5mm, 2mm, 2.5mm, 3mm, 2.5mm ball**
3647	**Nuts, 4mm flanged nylon locking (steel, serrated) (8)**
8347	Nuts, 4mm flanged nylon locking, serrated (black) (10)
1747R	**Nuts, aluminum, flanged, serrated (4mm) (blue-anodized) (4)**
1747G	**Nuts, aluminum, flanged, serrated (4mm) (green-anodized) (4)**
1747P	**Nuts, aluminum, flanged, serrated (4mm) (pink-anodized) (4)**
1985	PTFE-coated washers, 5x8x0.5mm (20) (use with ball bearings)
8221	Screw pin, 3x10mm (6)
3229	Screws, 2.5x10mm cap-head machine (hex drive) (6)
2523	Screws, 2.5x10mm countersunk machine (hex drive) (6)
3236	Screws, 2.5x12mm cap-head machine (6)
2618	Screws, 2.5x16mm cap-head machine (6)
3215	Screws, 2.5x6mm cap-head machine (hex drive) (6)
2617	Screws, 2.5x8mm button-head machine (hex drive) (6)
3965	Screws, 2.5x8mm cap-head machine (6)
2524	Screws, 2.5x8mm countersunk machine (hex drive) (6)
8299	Screws, 2.6x12mm button-head, self-tapping (hex drive) (6)
8167	Screws, 2x10mm cap-head, self-tapping (hex drive) (10)
2564	Screws, 2x8mm cap-head machine (hex drive) (6)
2577	Screws, 3x10mm button-head machine (hex drive) (6)
4859	Screws, 3x10mm flat-head machine (hex drive) (4)
2578	Screws, 3x12mm button-head machine (hex drive) (6)
2579	Screws, 3x15mm button-head machine (hex drive) (6)
2591	Screws, 3x23mm button-head machine (hex drive) (6)
2581	Screws, 3x25mm button-head machine (hex drive) (6)
2616	Screws, 3x27mm button-head machine (hex drive) (6)
2582	Screws, 3x30mm button-head machine (hex drive) (6)
2575	Screws, 3x6mm button-head machine (hex drive) (6)
3932	Screws, 3x6mm flat-head machine (hex drive) (6)
2576	Screws, 3x8mm button-head machine (hex drive) (6)
3931	Screws, 3x8mm flat-head machine (hex drive) (6)
3933	Screws, 4x16mm button-head machine (hex drive) (6)

LED Light Accessories

8031	**3-in-1 wire harness, LED light kit**
8089	**4-in-2 wire harness, LED light kit**
8028	**LED lights, power supply (regulated, 3V, 0.5-amp)/ 3-in-1 wire harness**
8026X	**LED rock light kit, TRX-4®/TRX-6™ (requires #8028 power supply and #8018, #8072, or #8080 inner fenders)**

LED Lights (1969-1972 Chevrolet Blazer)

8090	**LED light set, complete with power supply (contains headlights, tail lights, side marker lights, & distribution block) (fits #9111 or 9112 body)**

LED Lights (1979 Chevrolet Blazer)

8039	**LED light set (contains headlights, tail lights, side marker lights, distribution block (fits #8130 body, requires #8028 power supply)**
8038	**LED light set, complete with power supply (contains headlights, tail lights, side marker lights, distribution block, and power supply) (fits #8130 body)**

LED Lights (1979 Ford Bronco)

8036	**LED light set (contains headlights, tail lights, side marker lights, & distribution block) (fits #8010 body, requires #8028 power supply)**
8035	**LED light set, complete with power supply (contains headlights, tail lights, side marker lights, & distribution block) (fits #8010 body)**
8037	**LED lights, high/low switch (for #8035 or #8036 LED light kits)**

LED Lights (Land Rover Defender)

8027	**LED headlight/tail light kit (fits #8011 body, requires #8028 power supply)**
8025	**LED light bar (Rigid®), TRX-4 (requires #8028 power supply)**
8029	**LED light bar kit (Rigid®)/power supply, TRX-4®**
8030	**LED light set, complete (contains rock light kit, LED light bar (Rigid®), LED headlight/tail light kit, power supply, & 3-in-1 wire harness) (fits #8011 body)**

LED Lights (Mercedes-Benz® G 500® 4x4²)

8899	**LED light set (contains headlights, tail lights, roof lights, and distribution block) (fits #8811 or #8825 body, requires #8028 power supply)**
8898	**LED light set, complete with power supply (contains headlights, tail lights, roof lights, & distribution block) (fits #8811 or #8825 body)**

LED Lights (TRX-4® Sport)

8086	**LED expedition rack scene light kit (fits #8111 body, requires #8028 power supply)**
8084	**LED headlight/tail light kit (fits #8111 or #8112 body, requires #8028 power supply)**
8088	**LED light bar, front bumper (fits #8124 front bumper, requires #8028 power supply)**
8087	**LED light bar, roof lights (fits #8111 body, requires #8028 power supply)**
8085	**LED light set, complete with power supply (contains headlights, tail lights, & distribution block) (fits #8111 or #8112 body)**

Long Arm Lift Kit

8162X	**Body, GTS shock, long (aluminum, blue-anodized) (1) (for use with #8140X TRX-4® Long Arm Lift Kit)**
8162R	**Body, GTS shock, long (aluminum, red-anodized) (1) (for use with #8140R TRX-4® Long Arm Lift Kit)**
8162	**Body, GTS shock, long (silver aluminum) (1) (for use with #8140 TRX-4® Long Arm Lift Kit)**
8148	**Cable, T-lock (extra long) (for use with TRX-4® Long Arm Lift Kit)**
8147	**Cable, T-lock (medium) (for use with TRX-4® Long Arm Lift Kit)**
8150	**Driveshaft extension kit, center (includes internal splined, x-long (2), internal splined, long (1) and internal splined, medium (1)) (for use with TRX-4® Long Arm Lift Kit)**
8140	**Long Arm Lift Kit, TRX-4®, complete**
8140X	**Long Arm Lift Kit, TRX-4®, complete (includes blue powder coated links, blue-anodized shocks)**
8140R	**Long Arm Lift Kit, TRX-4®, complete (includes red powder coated links, red-anodized shocks)**
8149	**Rod ends, extended (standard (4), angled (4))/ hollow balls (8) (for use with TRX-4® Long Arm Lift Kit)**
8141	**Servo mount, steering (for use with TRX-4® Long Arm Lift Kit)**
8161	**Shock shaft, 3x57mm (GTS) (2) (includes bump stops) (for use with TRX-4® Long Arm Lift Kit)**
8160X	**Shocks, GTS, aluminum (blue-anodized) (assembled without springs) (4) (for use with #8140X TRX-4® Long Arm Lift Kit)**
8160R	**Shocks, GTS, aluminum (red-anodized) (assembled without springs) (4) (for use with #8140R TRX-4® Long Arm Lift Kit)**
8160	**Shocks, GTS, silver aluminum (assembled without springs) (4) (for use with #8140 TRX-4® Long Arm Lift Kit)**
8153	**Springs, shock, long (natural finish) (GTS) (0.29 rate, white stripe) (for use with TRX-4® Long Arm Lift Kit)**
8154	**Springs, shock, long (natural finish) (GTS) (0.39 rate, orange stripe) (for use with TRX-4® Long Arm Lift Kit)**
8155	**Springs, shock, long (natural finish) (GTS) (0.47 rate) (included with TRX-4® Long Arm Lift Kit)**

DEFENDER (82056-4)

8156 **Springs, shock, long (natural finish) (GTS) (0.54 rate, green stripe) (for use with TRX-4® Long Arm Lift Kit)**
8157 **Springs, shock, long (natural finish) (GTS) (0.62 rate, blue stripe) (for use with TRX-4® Long Arm Lift Kit)**
8146X **Steering link, 5x117mm (1)/ draglink, 5x60mm (1)/ panhard link, 5x63mm (blue powder coated steel) (assembled with hollow balls) (for use with #8140X TRX-4® Long Arm Lift Kit)**
8146R **Steering link, 5x117mm (1)/ draglink, 5x60mm (1)/ panhard link, 5x63mm (red powder coated steel) (assembled with hollow balls) (for use with #8140R TRX-4® Long Arm Lift Kit)**
8144X **Suspension link, front upper, 5x68mm (1) (blue powder coated steel) (assembled with hollow balls) (for use with #8140X TRX-4® Long Arm Lift Kit)**
8144R **Suspension link, front upper, 5x68mm (1) (red powder coated steel) (assembled with hollow balls) (for use with #8140R TRX-4® Long Arm Lift Kit)**
8144 **Suspension link, front upper, 5x68mm (1) (steel) (assembled with hollow balls) (for use with #8140 TRX-4® Long Arm Lift Kit)**
8143 **Suspension links, front lower (2) (5x104mm, steel) (assembled with hollow balls) (for use with #8140 TRX-4® Long Arm Lift Kit)**
8143X **Suspension links, front lower, blue (2) (5x104mm, powder coated steel) (assembled with hollow balls) (for use with #8140X TRX-4® Long Arm Lift Kit)**
8143R **Suspension links, front lower, red (2) (5x104mm, powder coated steel) (assembled with hollow balls) (for use with #8140R TRX-4® Long Arm Lift Kit)**
8145 **Suspension links, rear lower (2) (5x115mm, steel) (assembled with hollow balls) (for use with #8140 TRX-4® Long Arm Lift Kit)**
8145X **Suspension links, rear lower, blue (2) (5x115mm, powder coated steel) (assembled with hollow balls) (for use with #8140X TRX-4® Long Arm Lift Kit)**
8145R **Suspension links, rear lower, red (2) (5x115mm, powder coated steel) (assembled with hollow balls) (for use with #8140R TRX-4® Long Arm Lift Kit)**
8142 **Suspension links, rear upper (2) (5x115mm, steel) (assembled with hollow balls) (for use with #8140 TRX-4® Long Arm Lift Kit)**
8142X **Suspension links, rear upper, blue (2) (5x115mm, powder coated steel) (assembled with hollow balls) (for use with #8140X TRX-4® Long Arm Lift Kit)**
8142R **Suspension links, rear upper, red (2) (5x115mm, powder coated steel) (assembled with hollow balls) (for use with #8140R TRX-4® Long Arm Lift Kit)**
8172 **Tires and wheels, assembled (Method 105 2.2" black chrome beadlock wheels, Canyon Trail 5.3x2.2" tires, foam inserts) (1 left, 1 right)**
8181 **Tires and wheels, assembled, glued (TRX-4® Sport 2.2" wheels, Canyon Trail 5.3x2.2" tires) (2)**
8170 **Tires, Canyon Trail 5.3x2.2"/ foam inserts (2)**
8171 **Wheels, Method 105 2.2" (black chrome, beadlock) (beadlock rings sold separately)**
8171A **Wheels, Method 105 2.2" (charcoal gray, beadlock) (beadlock rings sold separately)**

Motors & Electronics

1926 Antenna caps, vinyl (2)/ antenna spool
1726 Antenna, tube (1)/ vinyl antenna cap (1)/ wire retainer (1)
2262 **BEC, complete (includes receiver box cover and seals)**
2064 Gear set (for 2065 waterproof sub-micro servo)
2064X **Gear set, metal (for 2065X waterproof sub-micro servo)**
2072X Gear set, metal (for 2070, 2075 servos)
2252 **Gear set, metal (for 2250, 2255 servos)**
2072R **Gear set, metal, high speed (for 2070, 2075 servos)**
8290X **Motor mount plate, 6061-T6 aluminum (blue-anodized)**
8290A **Motor mount plate, 6061-T6 aluminum (charcoal gray-anodized)**
8290G **Motor mount plate, 6061-T6 aluminum (green-anodized)**
8290R **Motor mount plate, 6061-T6 aluminum (red-anodized)**
3975R Motor, Titan® 550, reverse rotation (21-turns/ 14 volts) (1)
8290 Plate, motor/ upper spur gear cover
2254 **Servo case, aluminum (blue-anodized) (middle) (for 2250 servo)**
2253 **Servo case, aluminum (red-anodized) (middle) (for 2255 servo)**
2251 **Servo case, plastic (top, middle, bottom)/ gaskets/ hardware (for 2250, 2255 servos)**
2063 Servo case/gaskets (for 2065 waterproof sub-micro servo)
2063X **Servo case/gaskets (for 2065X metal gear, waterproof, sub-micro servo)**
5669 Servo horn (with built-in spring and hardware) (for Summit locking differential)
2075R **Servo, digital high-speed, metal gear (ball bearing), waterproof**
2250 **Servo, digital high-torque 330 coreless, metal gear (ball bearing), waterproof (#2262 external BEC and #8247X metal servo horn recommended for optimal performance)**
2255 **Servo, digital high-torque 400 brushless, metal gear (ball bearing), waterproof (#2262 external BEC and #8247X metal servo horn recommended for optimal performance)**
2075X Servo, digital high-torque, metal gear (ball bearing), waterproof
2065 Servo, sub-micro, waterproof
2065X **Servo, sub-micro, waterproof, metal gear**
3025 XL-5HV 3s Electronic Speed Control, waterproof (low-voltage detection, fwd/rev/brake)
2261 **Y-harness, BEC**

Radio System, Batteries & Chargers

2849X **4000mAh 11.1v 3-Cell 25C LiPo Battery**
2872X **5000mAh 11.1v 3-Cell 25C LiPo Battery**
2842X **5000mAh 7.4v 2-Cell 25C LiPo Battery**
2843X **5800mAh 7.4v 2-Cell 25C LiPo Battery**
2869X **7600mAh 7.4v 2-Cell 25C LiPo Battery**
2976 **AC to DC converter, 40W**
2938X **Adapter, Traxxas® iD® LiPo battery (adapts Traxxas iD batteries to separate balance ports)**
1726 Antenna, tube (1)/ vinyl antenna cap (1)/ wire retainer (1)
2943 **Battery charge indicators (green (4), blue (4), grey (4))**
6548 Battery door, transmitter (replacement for #6516, 6517, 6528, 6529, 6530 transmitters)
8222 **Battery strap (for 2200 2-cell and 1400 3-cell LiPo batteries)**
2914 **Battery, Power Cell AA Alkaline (4)**
2923X **Battery, Power Cell, 3000mAh (NiMH, 7-C flat, 8.4V)**
2940X **Battery, Series 3 Power Cell, 3300mAh (NiMH, 7-C flat, 8.4V)**
2950X **Battery, Series 4 Power Cell, 4200mAh (NiMH, 7-C flat, 8.4V)**
2960X **Battery, Series 5 Power Cell, 5000mAh (NiMH, 7-C flat, 8.4V)**
2983 **Battery/charger completer pack (includes #2969 2-amp NiMH peak detecting AC charger (1), #2923X 3000mAh 8.4V 7-cell NiMH battery (1))**
2992 **Battery/charger completer pack (includes #2970 iD® charger (1), #2843X 5800mAh 7.4V 2-cell 25C LiPo battery (1))**
2994 **Battery/charger completer pack (includes #2970 iD® charger (1), #2849X 4000mAh 11.1v 3-Cell 25C LiPo Battery (1))**
2991 **Battery/charger completer pack (includes #2972 Dual iD® charger (1), #2869X 7600mAh 7.4V 2-cell 25C LiPo battery (2))**
2262 **BEC, complete (includes receiver box cover and seals)**
2975 **Charger, DC, 4 amp (6 - 7 cell, 7.2 - 8.4 volt, NiMH)**
2972 **Charger, EZ-Peak® Dual, 100W, NiMH/LiPo with iD® Auto Battery Identification**
2973 **Charger, EZ-Peak® Live Dual, 200W, NiMH/LiPo with iD® Auto Battery Identification**
2971 **Charger, EZ-Peak® Live, 100W, NiMH/LiPo with iD® Auto Battery Identification**
2970 **Charger, EZ-Peak® Plus, 4 amp, NiMH/LiPo with iD® Auto Battery Identification**
6525 **Communication link, telemetry expander**
6541 **Connector, power tap (with cable) (long)/ wire tie**
6512 Cover plate, Traxxas Link™ Wireless Module
2978 **Fuse, charger, 5A (2) (for #2974, 2975, 2977)**
2072X Gear set, metal (for 2070, 2075 servos)
2252 **Gear set, metal (for 2250, 2255 servos)**
2072R **Gear set, metal, high speed (for 2070, 2075 servos)**
2968X **LiPo cell voltage checker/balancer (includes #2938X adapter for Traxxas® iD® batteries)**
2968 **LiPo cell voltage checker/balancer (requires #2938X adapter for Traxxas® iD® batteries)**
6561 **Mount, telemetry expander**
6535 **Mount, temperature sensor (electric motors)/ wire tie/ thermal pad**
6533 Receiver, micro, TQi 2.4GHz with telemetry & TSM (5-channel)
6552 **Seal kit, expander box (includes o-ring, seals, and silicone grease)**
6526 **Sensor, auto-detectable, temperature**
6527 **Sensor, auto-detectable, voltage**
6521 **Sensor, temperature and voltage (long)**
2254 **Servo case, aluminum (blue-anodized) (middle) (for 2250 servo)**
2253 **Servo case, aluminum (red-anodized) (middle) (for 2255 servo)**
2251 **Servo case, plastic (top, middle, bottom)/ gaskets/ hardware (for 2250, 2255 servos)**
2075R **Servo, digital high-speed, metal gear (ball bearing), waterproof**
2250 **Servo, digital high-torque 330 coreless, metal gear (ball bearing), waterproof (#2262 external BEC and #8247X metal servo horn recommended for optimal performance)**
2255 **Servo, digital high-torque 400 brushless, metal gear (ball bearing), waterproof (#2262 external BEC and #8247X metal servo horn recommended for optimal performance)**
2075X Servo, digital high-torque, metal gear (ball bearing), waterproof
2065 Servo, sub-micro, waterproof
6553X **Telemetry expander 2.0 and GPS module 2.0, TQi radio system**
6550X **Telemetry expander 2.0, TQi radio system (for use only with #6551X GPS module)**
6551X **Telemetry GPS module 2.0, TQi radio system (for use only with #6550X telemetry expander)**

REV. 201020 0904

6509R **TQi 2.4 GHz High Output radio system, 2-channel, Traxxas Link™ enabled, TSM (2-ch transmitter, 5-ch micro receiver)**
6507R **TQi 2.4 GHz High Output radio system, 4-channel with Traxxas Link™ Wireless Module, TSM (4-ch transmitter, 5-ch micro receiver)**
6530 Transmitter, TQi Traxxas Link™ enabled, 2.4GHz high output, 4-channel (transmitter only)
6511 **Traxxas Link™ Wireless Module**
2261 **Y-harness, BEC**

Ready-To-Race Model

82056-4 TRX-4® Scale and Trail™ Crawler with Land Rover® Defender® Body: 4WD Electric Trail Truck with TQi Traxxas Link™ Enabled 2.4GHz Radio System

Scale Details

8022T **Fuel canisters (black) (2)/ 3x8 FCS (1)**
8022R **Fuel canisters (blue) (2)/ 3x8 FCS (1)**
8022 Fuel canisters (red) (2)/ 3x8 FCS (1)
8022X **Fuel canisters (white) (2)/ 3x8 FCS (1)**
8022A **Fuel canisters (yellow) (2)/ 3x8 FCS (1)**
8023T **Jack (black) (1)/ 2x8 BCS (1)**
8023 Jack (red) (1)/ 2x8 BCS (1)

Shocks (GTS)

8266 Body, GTS shock (aluminum, silver-anodized) (1)
8266X **Body, GTS shock (hard-anodized, PTFE-coated aluminum) (1)**
8266A **Body, GTS shock, aluminum (blue-anodized) (1)**
8266G **Body, GTS shock, aluminum (green-anodized) (1)**
8266R **Body, GTS shock, aluminum (red-anodized) (1)**
8264 Caps & spring retainers, GTS shocks (upper cap (2)/ hollow balls (4)/ bottom cap (2)/ upper retainer (2)/ lower retainer (2))
8274 **Hollow ball set, complete, TRX-4® (aluminum, PTFE-coated)**
5475 Multi-tool (plastic)
8261 **Piston, damper (red) (4)/ e-clips (8)**
8262 Rebuild kit, GTS shocks (x-rings, o-rings, pistons, bushings, e-clips, and rod ends)
8263 Shock shaft, 3x47mm (GTS) (2)
8263T **Shock shaft, 3x47mm (GTS) (titanium nitride-coated) (2)**
8260X **Shocks, GTS hard-anodized, PTFE-coated aluminum bodies with TiN shafts (assembled with spring retainers) (2)**
8260A **Shocks, GTS, aluminum (blue-anodized) (assembled with spring retainers) (2)**
8260G **Shocks, GTS, aluminum (green-anodized) (assembled with spring retainers) (2)**
8260R **Shocks, GTS, aluminum (red-anodized) (assembled with spring retainers) (2)**
8260 Shocks, GTS, silver aluminum (assembled with spring retainers) (2)
1666 Silicone shock oil (30 wt)

Slipper Clutch Components

8292 Input shaft/ output shaft (transmission)
8286 Output shafts (transfer case), front & rear
8254 Rebuild kit, slipper clutch (steel disc (2)/ friction insert (2)/ 4.0mm NL (1)/ spring washers (4), metal washer (1))
8249 **Slipper eliminator plate**

Springs

8042 **Springs, shock (natural finish) (GTS) (0.22 rate, yellow stripe) (2)**
8043 **Springs, shock (natural finish) (GTS) (0.30 rate, white stripe) (2)**
8044 **Springs, shock (natural finish) (GTS) (0.39 rate, orange stripe) (2)**
8041 Springs, shock (natural finish) (GTS) (0.45 rate) (2)
8040 Springs, shock (natural finish) (GTS) (0.54 rate, green stripe) (2)
8045 **Springs, shock (natural finish) (GTS) (0.61 rate, blue stripe) (2)**

Spur Gears & Pinion Gears

6746 **Gear, 10-T pinion (32-p) (steel)/ set screw**
6747 Gear, 11-T pinion (32-p) (steel)/ set screw
3942X **Gear, 12-T pinion (32-p), heavy duty (machined, hardened steel)/ set screw**
3943X **Gear, 13-T pinion (32-p), heavy duty (machined, hardened steel)/ set screw**
3944X **Gear, 14-T pinion (32-p), heavy duty (machined, hardened steel)/ set screw**
3945X **Gear, 15-T pinion (32-p), heavy duty (machined, hardened steel)/ set screw**
3946X **Gear, 16-T pinion (32-p), heavy duty (machined, hardened steel)/ set screw**
3947X **Gear, 17-T pinion (32-p), heavy duty (machined, hardened steel)/ set screw**
3948X **Gear, 18-T pinion (32-p), heavy duty (machined, hardened steel)/ set screw**
3950X **Gear, 20-T pinion (32-p), heavy duty (machined, hardened steel)/ set screw**
3951X **Gear, 21-T pinion (32-p), heavy duty (machined, hardened steel)/ set screw**
3952X **Gear, 22-T pinion (32-p), heavy duty (machined, hardened steel)/ set screw**
6745 **Gear, 9-T pinion (32-p) (steel)/ set screw**
8279 Ring gear, differential/ pinion gear, differential
8052 **Spur gear, 39-tooth (32-pitch)**
8053 Spur gear, 45-tooth (32-pitch)

Steering Components

8232 Caster blocks (portal drive), left & right/ kingpin bushings (4)
8232X **Caster blocks, 6061-T6 aluminum (blue-anodized), left and right**
8232A **Caster blocks, 6061-T6 aluminum (charcoal gray-anodized), left and right**
8232G **Caster blocks, 6061-T6 aluminum (green-anodized), left and right**
8232R **Caster blocks, 6061-T6 aluminum (red-anodized), left and right**
2072X Gear set, metal (for 2070, 2075 servos)
2072R **Gear set, metal, high speed (for 2070, 2075 servos)**
8274 **Hollow ball set, complete, TRX-4® (aluminum, PTFE-coated)**
5355 Hollow ball, tall centered (2)/ tall offset hollow ball (2)/ bump steer adjustment shims; 3.5mm (2), 1.17mm (2)
8275 Rod end set, complete (standard (10), angled 10-degrees (8), offset (4))
8276 Rod ends (10)
8277 Rod ends, angled 10-degrees (8)
2742 Rod ends, long (6)/ hollow ball connectors (6)
8278 Rod ends, offset (4)
8247X Servo horn, steering, metal/ 3x14 BCS (1)
2075R **Servo, digital high-speed, metal gear (ball bearing), waterproof**
2075X Servo, digital high-torque, metal gear (ball bearing), waterproof
5529 Shim set, 3x7x1mm (2), 3x6x0.5mm (4), 3x7x2mm (2)/ hollow balls, captured (4)
8246 Steering link, 5x60mm (1)/ draglink, 5x117mm (1) (steel)
8243 Suspension link, front, 5x100mm (lower) (steel) (2)
8244 Suspension link, front, 5x63mm (upper) (steel) (2)
8245 Suspension link, rear, 5x121mm (upper or lower) (steel) (2)

Suspension Linkage

8274 **Hollow ball set, complete, TRX-4® (aluminum, PTFE-coated)**
5355 Hollow ball, tall centered (2)/ tall offset hollow ball (2)/ bump steer adjustment shims; 3.5mm (2), 1.17mm (2)
8275 Rod end set, complete (standard (10), angled 10-degrees (8), offset (4))
8276 Rod ends (10)
8277 Rod ends, angled 10-degrees (8)
2742 Rod ends, long (6)/ hollow ball connectors (6)
8278 Rod ends, offset (4)
5529 Shim set, 3x7x1mm (2), 3x6x0.5mm (4), 3x7x2mm (2)/ hollow balls, captured (4)
8243 Suspension link, front, 5x100mm (lower) (steel) (2)
8244 Suspension link, front, 5x63mm (upper) (steel) (2)
8248 **Suspension link, rear, 5x109mm (upper or lower) (steel) (2)**
8245 Suspension link, rear, 5x121mm (upper or lower) (steel) (2)

Team Traxxas Items

2514 **Decal sheet, racing sponsors**
6160X **DVD, Maxx® Power! Full Throttle Action (sleeve)**
9950 **Official Team Traxxas® racing decal set (flag logo/ 6-color)**
9909 **Traxxas® racing banner, red & black (3x7 feet)**

Tires & Wheels

8169T **Beadlock rings, black (1.9") (aluminum) (4)/ 2x10 CS (48)**
8168T **Beadlock rings, black (2.2") (aluminum) (4)/ 2x10 CS (48)**
8169X **Beadlock rings, blue (1.9") (aluminum) (4)/ 2x10 CS (48)**
8168X **Beadlock rings, blue (2.2") (aluminum) (4)/ 2x10 CS (48)**
8169G **Beadlock rings, green (1.9") (aluminum) (4)/ 2x10 CS (48)**
8168G **Beadlock rings, green (2.2") (aluminum) (4)/ 2x10 CS (48)**
8169A **Beadlock rings, orange (1.9") (aluminum) (4)/ 2x10 CS (48)**
8168A **Beadlock rings, orange (2.2") (aluminum) (4)/ 2x10 CS (48)**
8169R **Beadlock rings, red (1.9") (aluminum) (4)/ 2x10 CS (48)**
8168R **Beadlock rings, red (2.2") (aluminum) (4)/ 2x10 CS (48)**
8169 **Beadlock rings, satin (1.9") (aluminum) (4)/ 2x10 CS (48)**
8168 **Beadlock rings, satin (2.2") (aluminum) (4)/ 2x10 CS (48)**
8176 **Center caps, wheel (chrome) (4)/ decal sheet (requires #8255A extended stub axle)**
8174 **Tires and wheels, assembled (Method 105 1.9" black chrome beadlock wheels, Canyon Trail 4.6x1.9" tires, foam inserts) (1 left, 1 right)**
8172 **Tires and wheels, assembled (Method 105 2.2" black chrome beadlock wheels, Canyon Trail 5.3x2.2" tires, foam inserts) (1 left, 1 right) (for use with TRX-4 Long Arm Lift Kit)**

DEFENDER (82056-4)

8166X	**Tires and wheels, assembled, glued (1.9" chrome wheels, Canyon Trail 4.6x1.9" tires) (4)/ center caps (4)/ decal sheet (requires #8255A extended stub axle)**
8166	**Tires and wheels, assembled, glued (1.9" chrome wheels, Canyon Trail 4.6x1.9" tires) (2)/ center caps (2)/ decal sheet (requires #8255A extended stub axle)**
8177	**Tires and wheels, assembled, glued (1.9" chrome wheels, Canyon Trail 4.6x1.9" tires) (2)/ center caps (2)/ decal sheet (requires #8255A extended stub axle)**
8183X	**Tires and wheels, assembled, glued (1.9" classic chrome wheels, Canyon Trail 4.6x1.9" tires) (4)/ center caps (4) (requires #8255A extended stub axle)**
8273	**Tires and wheels, assembled, glued (Tactical 1.9" wheels, Canyon Trail 4.6x1.9" tires) (2)**
8272X	**Tires and wheels, assembled, glued (TRX-4® 1.9" satin beadlock wheels, Canyon Trail 4.6x1.9" tires) (2)**
8272	Tires and wheels, assembled, glued (TRX-4® 1.9" wheels, Canyon Trail 4.6x1.9" tires) (2)
8181	**Tires and wheels, assembled, glued (TRX-4® Sport 2.2" wheels, Canyon Trail 5.3x2.2" tires) (2) (for use with TRX-4 Long Arm Lift Kit)**
8270	Tires, Canyon Trail 4.6x1.9" (S1 compound)/ foam inserts (2)
8170	**Tires, Canyon Trail 5.3x2.2"/ foam inserts (2) (for use with TRX-4 Long-Arm Lift Kit)**
8269	Wheel hubs, 12mm hex (2)/ stub axle pins (2) (steel)
8269X	**Wheel hubs, 12mm hex, 6061-T6 aluminum (blue-anodized) (4)/ screw pin (4)**
8269A	**Wheel hubs, 12mm hex, 6061-T6 aluminum (charcoal gray-anodized) (4)/ screw pin (4)**
8269G	**Wheel hubs, 12mm hex, 6061-T6 aluminum (green-anodized) (4)/ screw pin (4)**
8269R	**Wheel hubs, 12mm hex, 6061-T6 aluminum (red-anodized) (4)/ screw pin (4)**
8175	**Wheels, 1.9", chrome (2)/ center caps (2)/ decal sheet (requires #8255A extended stub axle)**
8173	**Wheels, Method 105 1.9" (black chrome, beadlock) (beadlock rings sold separately)**
8173A	**Wheels, Method 105 1.9" (charcoal gray, beadlock) (beadlock rings sold separately)**
8171	**Wheels, Method 105 2.2" (black chrome, beadlock) (beadlock rings sold separately) (for use with TRX-4 Long Arm Lift Kit)**
8171A	**Wheels, Method 105 2.2" (charcoal gray, beadlock) (beadlock rings sold separately) (for use with TRX-4 Long Arm Lift Kit)**
8268	**Wheels, Tactical 1.9 (2)**
8271	Wheels, TRX-4® 1.9 (2)
8271X	**Wheels, TRX-4® 1.9 (satin beadlock) (2)**

Transmission Components

8283	Cable, T-lock (front)
8284	Cable, T-lock (rear)
8289	Drive hub, 2-speed/ shift dog/ shift fork/ 2-speed linkage
8293X	**Gear set, transmission, metal (includes 18T, 30T input gears, 36T output gear, 2x9.8 pins (5))**
8291	Gearbox housing (includes main housing, front housing, & cover)
8285	Gears, transfer case (3)
5041	Grease, premium high performance (20cc)
8292	Input shaft/ output shaft (transmission)
8290X	**Motor mount plate, 6061-T6 aluminum (blue-anodized)**
8290A	**Motor mount plate, 6061-T6 aluminum (charcoal gray-anodized)**
8290G	**Motor mount plate, 6061-T6 aluminum (green-anodized)**
8290R	**Motor mount plate, 6061-T6 aluminum (red-anodized)**
8295	Output drive, transmission or differential (pin retainer (1)/ drive cup (1)/ drive ball (1)/ drive pin (1)/ 3x11 screw pin (1)/ cross pin (black) (1) 3x6 BCS with threadlock (1))
8294	Output gear, high range, 24T (metal)
8286	Output shafts (transfer case), front & rear
8290	Plate, motor/ upper spur gear cover
8249	**Slipper eliminator plate**
8296	**Transmission gears, single speed, metal**

Traxxas Tools

3433X	**Body reamer (aluminum handle)**
3433	**Body reamer (plastic handle)**
3436	**Cap, body reamer**
3432	**Scissors, curved tip**
3431	**Scissors, straight tip**
8712	**Speed Bit Essentials Set, hex and nut driver, 7-piece, includes premium handle (medium), travel pouch, hex drivers (straight: 1.5mm, 2.0mm, 2.5mm) and nut drivers (5.0mm, 5.5mm, 7.0mm, and 8.0mm), 1/4" drive**
8721	**Speed bit handle, medium (one piece)**
8720	**Speed bit handle, premium, large (rubber overmold)**
8722	**Speed bit handle, premium, medium (rubber overmold)**
8710	**Speed Bit Master Set, hex and nut driver, 13-piece, includes premium handle (medium), travel pouch, hex drivers (straight: 1.5mm, 2.0mm, 2.5mm, 3.0mm), (ball-end: 2.0mm, 2.5mm, 3.0mm), and nut drivers (4.00mm, 4.50mm, 5.00mm, 5.50mm, 7.00mm, 8.00mm),**
8711	**Speed Bit Master Set, hex driver, 7-piece straight and ball end, includes premium handle (medium), travel pouch, hex drivers (straight: 1.5mm, 2.0mm, 2.5mm, 3.0mm) (ball end: 2.0mm, 2.5mm, 3.0mm), 1/4" drive**
8719	**Speed Bit Master Set, nut driver, 6-piece, includes premium handle (medium), travel pouch, and nut drivers (4.0mm, 4.5mm, 5.0mm, 5.5mm, 7.0mm, 8.0mm), 1/4" drive**
8716	**Speed Bit Set, hex driver, 2-piece ball-end (2.0mm, 2.5mm), 1/4" drive**
8716X	**Speed Bit Set, hex driver, 3-piece ball-end (2.0mm, 2.5mm, 3.0mm), 1/4" drive**
8715	**Speed Bit Set, hex driver, 3-piece straight (1.5mm, 2.0mm, 2.5mm), 1/4" drive**
8715X	**Speed Bit Set, hex driver, 4-piece straight (1.5mm, 2.0mm, 2.5mm, 3.0mm), 1/4" drive**
3415	**Tool set with pouch (includes 1.5mm, 2.0mm, 2.5mm, 3.0mm, 3.5mm, 4mm drivers/ 4mm, 5mm, 5.5mm, 7mm and 8mm nut drivers/ 2mm, 4mm, and 5mm slotted screwdrivers/ #00 Phillips, #0 Phillips, and #1 Phillips screwdrivers/ 4mm and 8mm wrench/ driver handle**

TRX-4® Traxx™

8889	**Bearing retainers, inner (2), outer (2)**
8890	**Drive wheel (1)**
8885	**Shock mounts (frame, left (2), frame, right (2))/ portal mounts (1 each, front (left & right), rear (left & right))**
8888	**Spring (4)**
8887	**Stub axle (1)**
8886	**Stub axle nut (4)**
8891	**Tension wheels (6)/ road wheels (4)**
8881	**Traxx™, front, left (assembled) (requires #8886 stub axle, #7061 GTR shock, & #8878 or #8895 rubber track)**
8882	**Traxx™, front, right (assembled) (requires #8886 stub axle, #7061 GTR shock, & #8878 or #8895 rubber track)**
8883	**Traxx™, rear, left (assembled) (requires #8886 stub axle, #7061 GTR shock, & #8879 or #8896 rubber track)**
8884	**Traxx™, rear, right (assembled) (requires #8886 stub axle, #7061 GTR shock, & #8879 or #8896 rubber track)**
8880	**Traxx™, TRX-4® (4) (complete set, front & rear)**
8895	**Treads, All-Terrain, TRX-4® Traxx™ (front, left or right) (rubber) (1)**
8896	**Treads, All-Terrain, TRX-4® Traxx™ (rear, left or right) (rubber) (1)**

If you have questions or need technical assistance, call Traxxas at:

1-888-TRAXXAS

(1-888-872-9927) (U.S. residents only)

For orders, calls outside the U.S., and other information, call 972-549-3000, or fax to 972-549-3011 e-mail Traxxas at support@Traxxas.com

TRAXXAS.COM

K5 BLAZER

TRX-4

MODEL 82076-4

4WD ELECTRIC
SCALE & TRAIL™ CRAWLER



TQi 2.4GHz TRANSMITTER

TITAN 21T 550 MOTOR AND XL-5 HV ELECTRONIC SPEED CONTROL

GTS ALUMINUM SHOCKS

TAKE THE PATH LESS TRAVELED

The Traxxas TRX-4® Scale and Trail™ crawler is an all-new Traxxas design that is loaded with innovation that instantly obsoletes the status quo with exciting new features, versatility, and capability. In other words, we built it the Traxxas way, rugged, powerful, and ready for fun! Underneath the authentic scale look is a machine built for extreme off-road capability that takes you to new places and new adventures. Exclusive portal axles deliver maximum ground clearance that dramatically turns "no way" into "no problem." Whether you are enjoying outdoor trails or getting technical on the rocks, the remote-locking front and rear differentials and high/low range transmission provide unmatched driving versatility.

GM

OFFICIAL LICENSED PRODUCT

GM used under license to Traxxas.

TRX4 Front Assembly

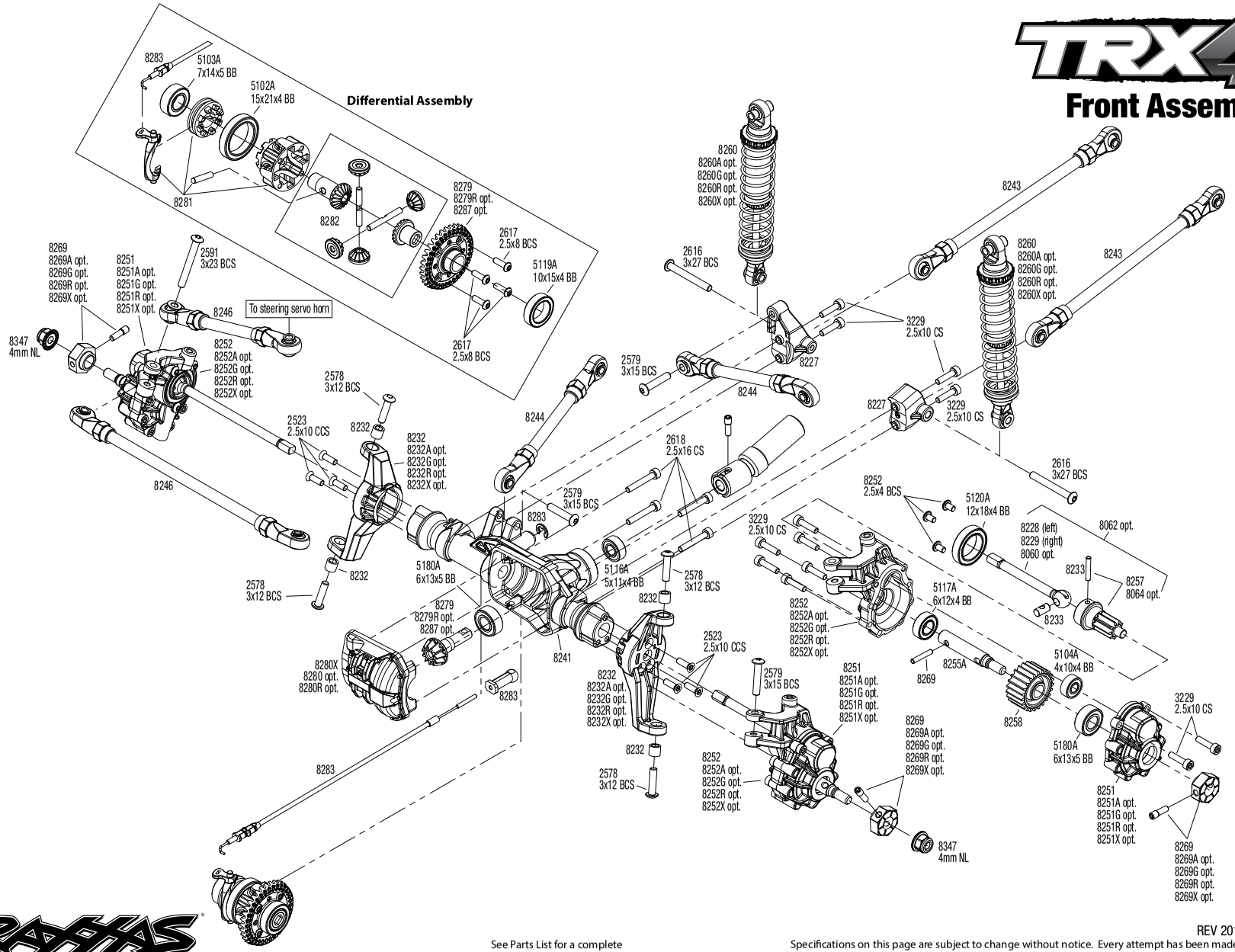

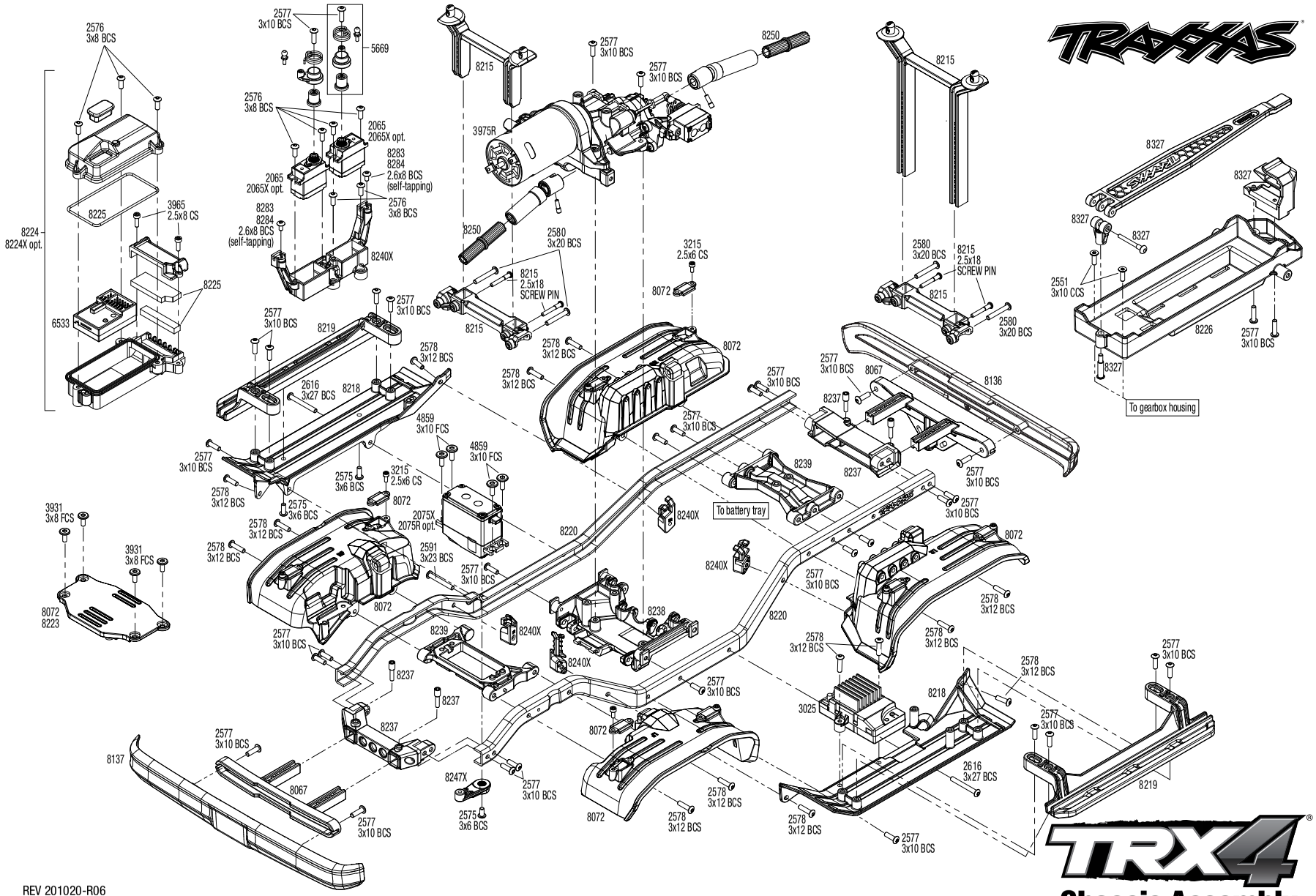

REV 201020-R06

See Parts List for a complete listing of optional accessories.

Specifications on this page are subject to change without notice. Every attempt has been made to ensure the accuracy of this drawing; however, Traxxas cannot be held responsible for typographical or other errors.

TRX4® Chassis Assembly

TRAXXAS

TRX4 Rear Assembly

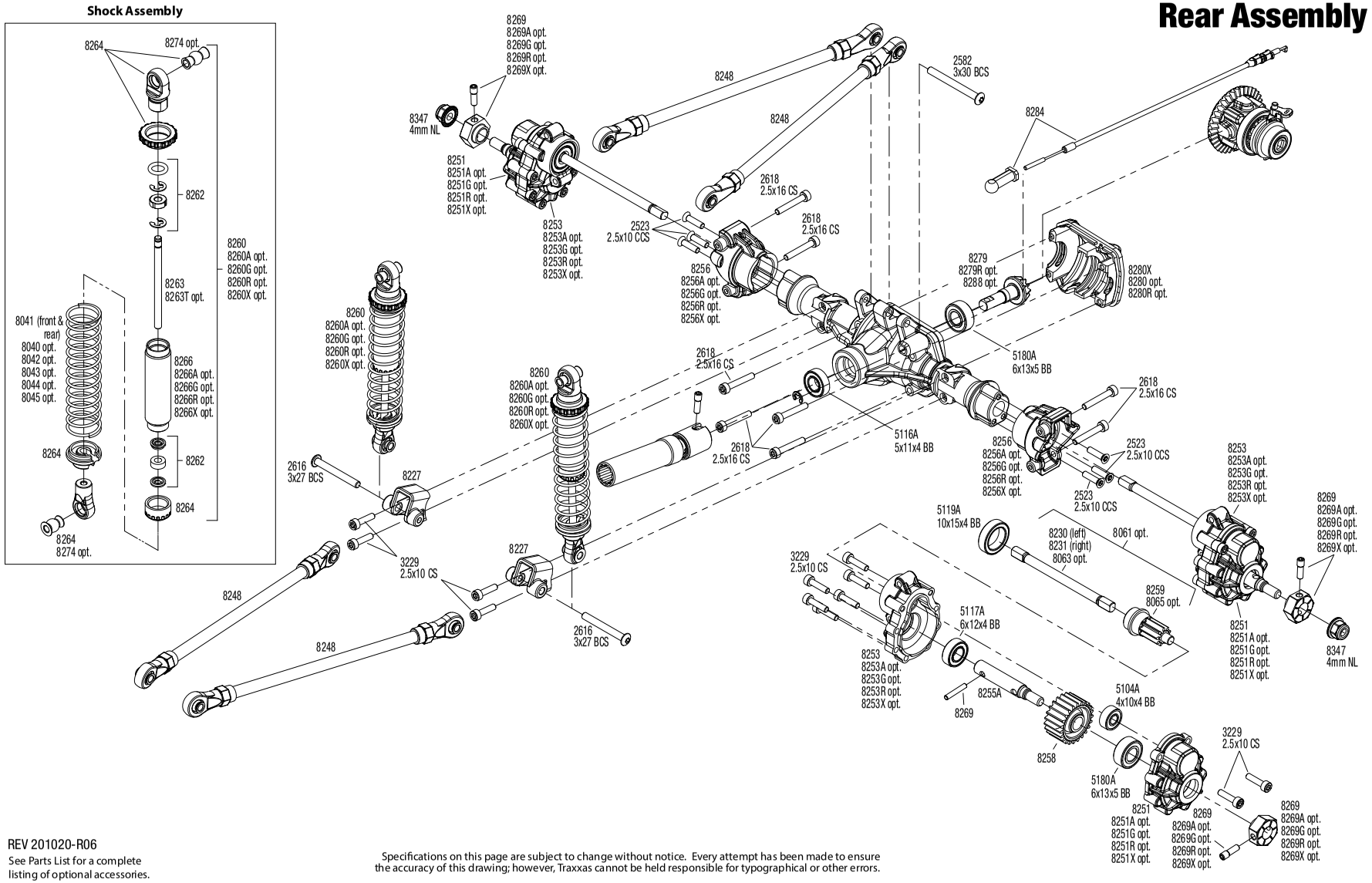

REV 201020-R06

See Parts List for a complete listing of optional accessories.

Specifications on this page are subject to change without notice. Every attempt has been made to ensure the accuracy of this drawing; however, Traxxas cannot be held responsible for typographical or other errors.

Transmission Assembly

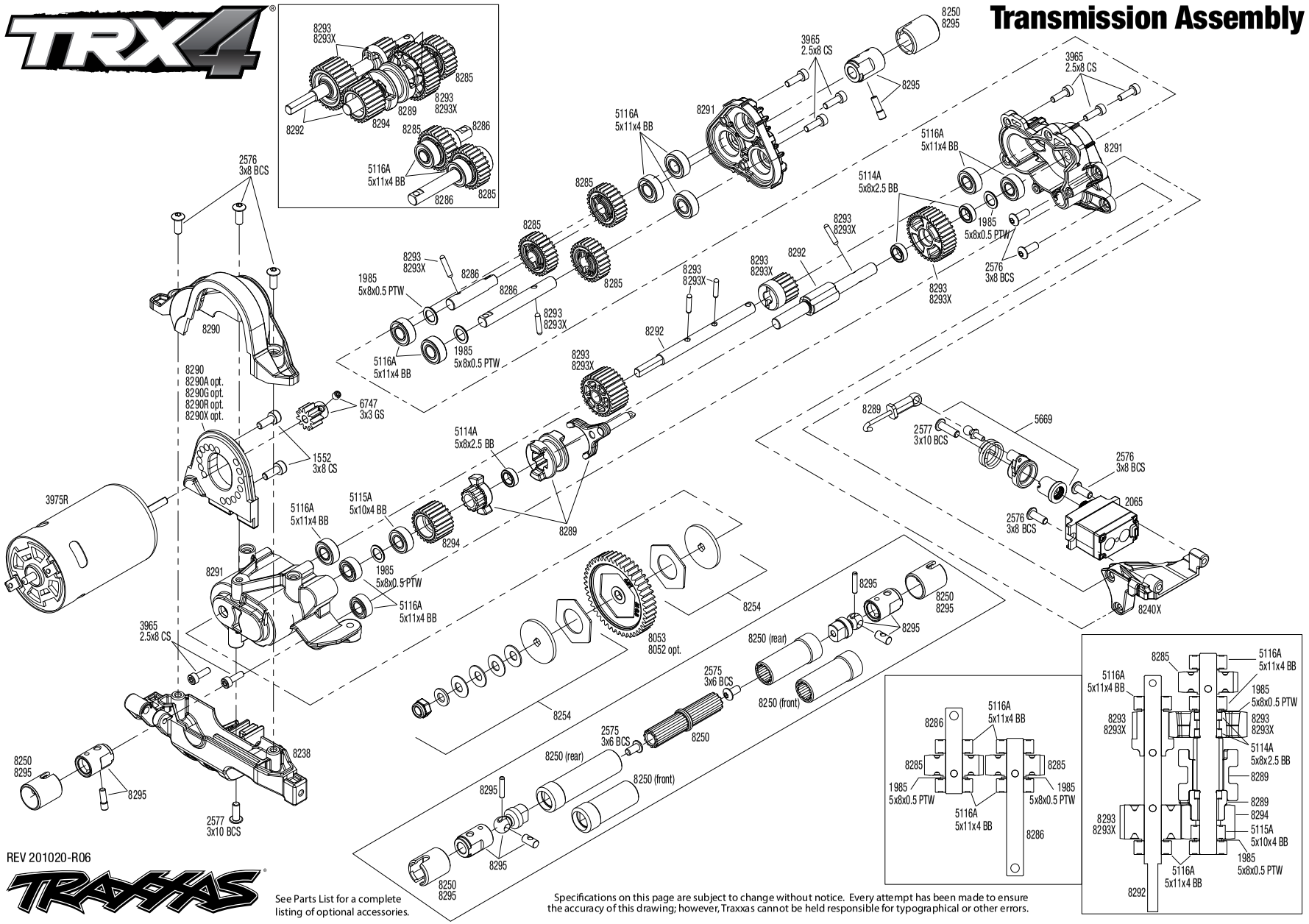

REV 201020-R06

See Parts List for a complete listing of optional accessories.

Specifications on this page are subject to change without notice. Every attempt has been made to ensure the accuracy of this drawing; however, Traxxas cannot be held responsible for typographical or other errors.

TRX4®

TRAXXAS®

Link Dimensions

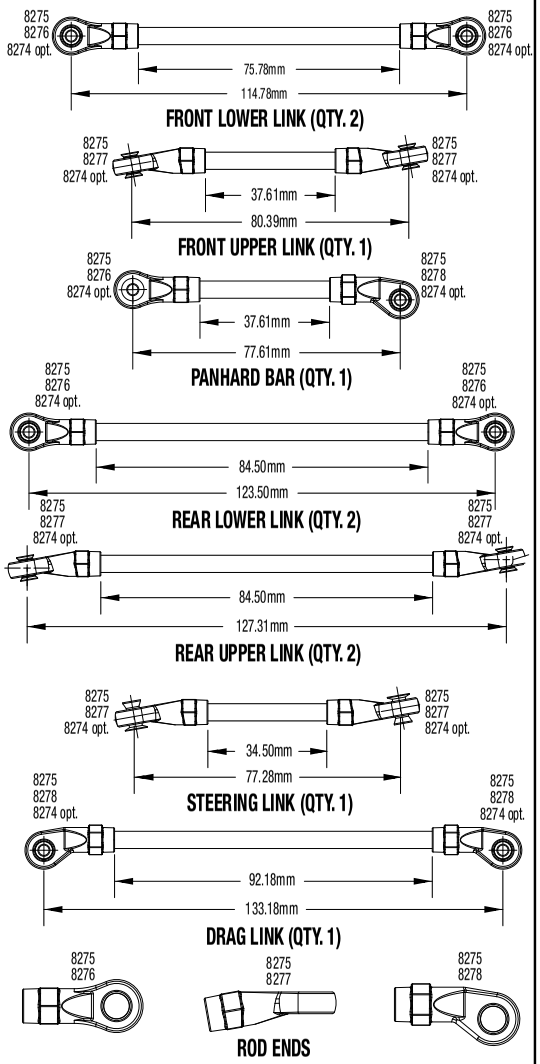

For standard hollow ball replacement, use part #5349.

Modular Assembly

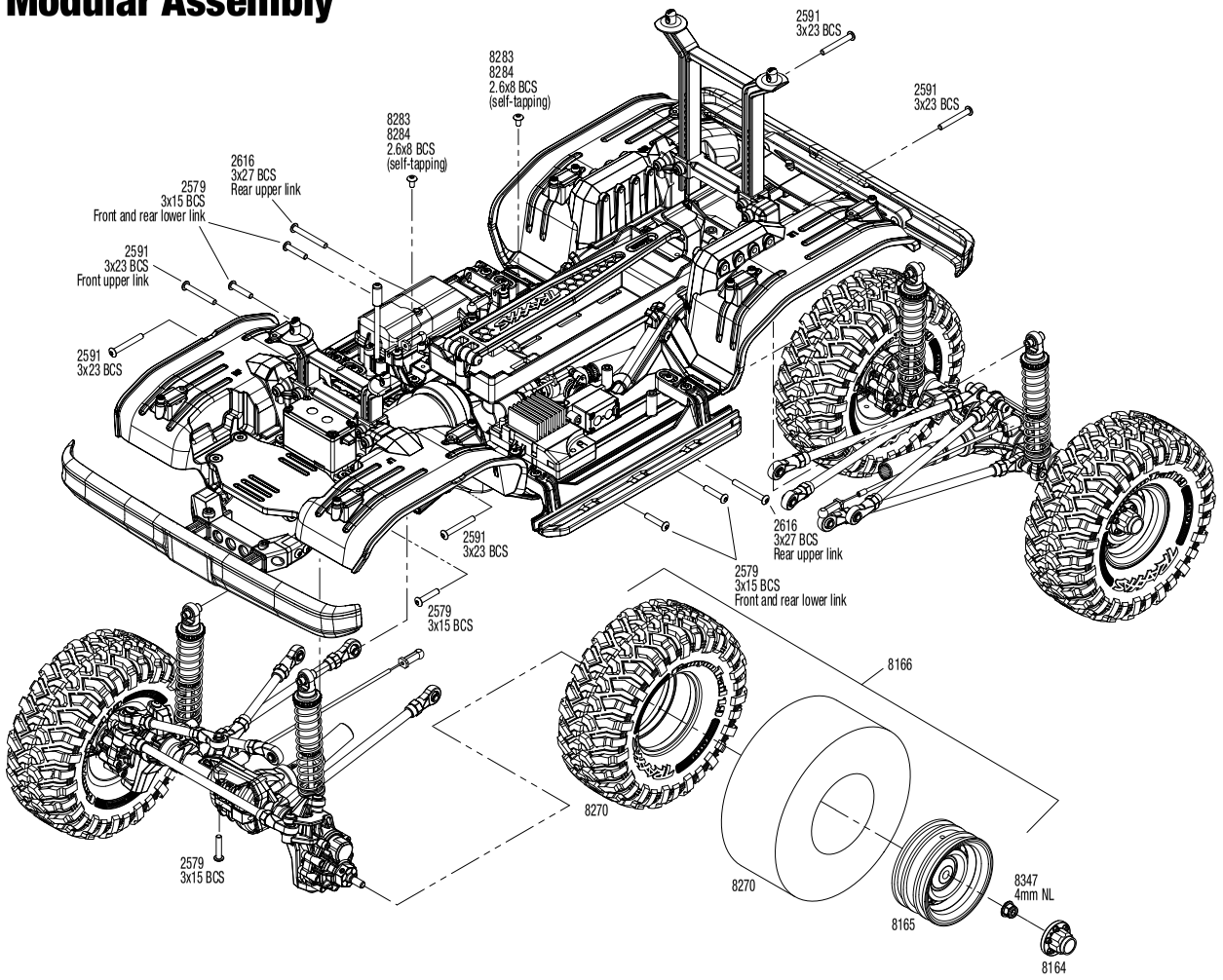

See Parts List for a complete listing of optional accessories.

REV 201020-R06

Specifications on this page are subject to change without notice. Every attempt has been made to ensure the accuracy of this drawing; however, Traxxas cannot be held responsible for typographical or other errors.

K5 BLAZER (82076-4)

EXPLODED VIEWS

REV 201020-R06

Specifications on this page are subject to change without notice. Every attempt has been made to ensure the accuracy of this drawing; however, Traxxas cannot be held responsible for typographical or other errors.

See Parts List for a complete listing of optional accessories.

TRX-4

Body Assembly

Questions? **Call toll-free, 1-888-TRAXXAS**

PARTS SHOWN IN BOLD ARE OPTIONAL ACCESSORIES.

Part categories and individual part listings are arranged alphabetically.

Axle Components

8241 Axle housing, front
8242 Axle housing, intermediate (TRX-6™) or rear (TRX-4®)
8227 Axle mount set (complete) (front & rear) (for suspension links)
8228 Axle shaft, front (left)/ drive pin/ cross pin
8229 Axle shaft, front (right)/ drive pin/ cross pin
8060 Axle shaft, front, heavy duty (left & right) (requires #8064 front portal drive input gear)
8062 Axle shaft, front, heavy duty (left & right)/ portal drive input gear (machined) (2) (assembled)
8230 Axle shaft, rear (left)
8231 Axle shaft, rear (right)
8061 Axle shaft, rear, heavy duty (left & right)/ portal drive input gear, rear (machined)
8063 Axle, rear, heavy duty (left & right) (requires #8065 rear portal drive input gear)
8233 Cross pin (2)/ drive pin (2) (to rebuild front axle shafts)
8256 Portal drive axle mount, rear (left & right)
8256X Portal drive axle mount, rear, 6061-T6 aluminum (blue-anodized) (left and right)/ 2.5x16 CS (4)
8256A Portal drive axle mount, rear, 6061-T6 aluminum (charcoal gray-anodized) (left and right)/ 2.5x16 CS (4)
8256G Portal drive axle mount, rear, 6061-T6 aluminum (green-anodized) (left and right)/ 2.5x16 CS (4)
8256R Portal drive axle mount, rear, 6061-T6 aluminum (red-anodized) (left and right)/ 2.5x16 CS (4)
8252 Portal drive housing, inner, front (left & right)/ 2.5x4 BCS (6)
8253 Portal drive housing, inner, rear (left or right) (2)
8251 Portal drive housing, outer (front or rear) (2)
8064 Portal drive input gear, front (machined) (left or right) (requires #8060 front axle shaft)
8257 Portal drive input gear, front/ drive pin/ cross pin
8259 Portal drive input gear, rear
8065 Portal drive input gear, rear (machined) (left or right) (requires #8063 rear axle)
8258 Portal drive output gear, front or rear
8252X Portal housings, inner (front), 6061-T6 aluminum (blue-anodized) (2)/ 3x12 BCS (2)
8252A Portal housings, inner (front), 6061-T6 aluminum (charcoal gray-anodized) (2)/ 3x12 BCS (2)
8252G Portal housings, inner (front), 6061-T6 aluminum (green-anodized) (2)/ 3x12 BCS (2)
8252R Portal housings, inner (front), 6061-T6 aluminum (red-anodized) (2)/ 3x12 BCS (2)
8253X Portal housings, inner (rear), 6061-T6 aluminum (blue-anodized) (2)/ 2.5x10 CS (2)
8253A Portal housings, inner (rear), 6061-T6 aluminum (charcoal gray-anodized) (2)/ 2.5x10 CS (2)
8253G Portal housings, inner (rear), 6061-T6 aluminum (green-anodized) (2)/ 2.5x10 CS (2)
8253R Portal housings, inner (rear), 6061-T6 aluminum (red-anodized) (2)/ 2.5x10 CS (2)
8251X Portal housings, outer, 6061-T6 aluminum (blue-anodized) (2)/ 2.5x10 CS (12)
8251A Portal housings, outer, 6061-T6 aluminum (charcoal gray-anodized) (2)/ 2.5x10 CS (12)
8251G Portal housings, outer, 6061-T6 aluminum (green-anodized) (2)/ 2.5x10 CS (12)
8251R Portal housings, outer, 6061-T6 aluminum (red-anodized) (2)/ 2.5x10 CS (12)
8255A Stub axle, extended (portal drive) (2)
8267 Weight, portal housing, brass (34 grams) (2)/ 2.5x8 CS (6) (requires #8251X, 8251R, 8251A, or 8251G outer portal housing)

Bearings & Bushings

5119A Ball bearings, black rubber sealed (10x15x4mm) (2)
5120A Ball bearings, black rubber sealed (12x18x4mm) (2)
5104A Ball bearings, black rubber sealed (4x10x4mm) (2)
5115A Ball bearings, black rubber sealed (5x10x4mm) (2)
5116A Ball bearings, black rubber sealed (5x11x4mm) (2)
5114A Ball bearings, black rubber sealed (5x8x2.5mm) (2)
5117A Ball bearings, black rubber sealed (6x12x4mm) (2)
5180A Ball bearings, black rubber sealed (6x13x5mm) (2)
5103A Ball bearings, black rubber sealed (7x14x5mm) (2)

Body (1969 Chevrolet Blazer)

9112 Body, Chevrolet Blazer (1969 - 1970) (clear, requires painting) (includes grille, side mirrors, door handles, windshield wipers, decals, window masks)
9112X Body, Chevrolet Blazer (1969), complete (black) (includes grill, side mirrors, door handles, windshield wipers, front & rear bumpers, decals)
9125 Bumper pads/ bumper guards (chrome)/ 2.5x10 BCS (4)/ 2.7mm drill bit (fits #9126 or #9127 front bumpers)
9127 Bumper, front (chrome)/ bumper mount/ 3x10 BCS (2)
9124 Bumper, rear (chrome)/ bumper mount/ 3x10 BCS (2)
9113 Decal sheets, Chevrolet Blazer (1969 -1972)
9115 Door handles, left, right, and rear/ retainers (3)/ windshield wipers, left & right/ retainer (1)/ fuel cap/ fuel flange/ fuel cap mount/ 1.6x5 BCS (self-tapping) (7)/ 2.6x8 BCS (1)
9123 Grille, Chevrolet Blazer (1969 - 1970)/ grille retainers (5)/ headlight housing (2)/ headlight lens (2)/ turn signal lens (2)/ hood emblem/ hood emblem mount/ 2.6x8 BCS (5)/ 2.5x6 BCS (4)/ 1.6x5 BCS (self-tapping) (2) (fits #9112 body)
9116 Marker light housing (4)/ marker light mount (4)/ marker light lens (red (2), amber (2))/ reverse lens (left & right)/ 1.6x5 BCS (self-tapping) (8)
9121 Mirrors, side, chrome (left & right)/ o-rings (4)/ body clips (4) (fits #9112 body)
9122 Tail light housing, black (2)/ lens (2)/ retainers (left & right)/ 2.6x8 BCS (self-tapping) (4)

Body (1972 Chevrolet Blazer)

9111 Body, Chevrolet Blazer (1972) (clear, requires painting) (includes grille, side mirrors, side trim, door handles, windshield wipers, decals, window masks)
9111X Body, Chevrolet Blazer (1972), complete (blue) (includes grille, side mirrors, door handles, windshield wipers, front & rear bumpers, decals)
9125 Bumper pads/ bumper guards (chrome)/ 2.5x10 BCS (4)/ 2.7mm drill bit (fits #9126 or #9127 front bumpers)
9126 Bumper, front (chrome)/ bumper mount/ lens (left and right) (2)/ lens mount (left and right) (2)/ 3x10 BCS (2)/ 2.6x6 BCS (4)
9124 Bumper, rear (chrome)/ bumper mount/ 3x10 BCS (2)
9113 Decal sheets, Chevrolet Blazer (1969 -1972)
9115 Door handles, left, right, and rear/ retainers (3)/ windshield wipers, left & right/ retainer (1)/ fuel cap/ fuel flange/ fuel cap mount/ 1.6x5 BCS (self-tapping) (7)/ 2.6x8 BCS (1)
9120 Grille, Chevrolet Blazer (1972)/ grille retainers (5)/ headlight housing (2)/ lens (2)/ 2.6x8 BCS (5)/ 2.5x6 BCS (4) (fits #9111 body)
9116 Marker light housing (4)/ marker light mount (4)/ marker light lens (red (2), amber (2))/ reverse lens (left & right)/ 1.6x5 BCS (self-tapping) (8)
9118 Mirrors, side, chrome (left & right)/ o-rings (4)/ body clips (4) (fits #9111 body)
9117 Side trim, Chevrolet Blazer (1972), left & right/ rear trim, upper & lower/ retainers, left, right & rear/ 2.6x8 BCS (23)/ 1.6x5 BCS (self-tapping) (5) (fits #9111 body)
9119 Tail light housing, chrome (2)/ lens (2)/ retainers (left & right)/ 2.6x8 BCS (self-tapping) (4)

Body (1979 Chevrolet Blazer)

8130 Body, Chevrolet Blazer (1979) (clear, requires painting)/ window masks
8130G Body, Chevrolet Blazer (1979) (orange) (requires grille, side mirrors, door handles, windshield wipers, decals)
8130A Body, Chevrolet Blazer (1979) (red) (requires grille, side mirrors, door handles, windshield wipers, decals)
8130X Body, Chevrolet Blazer (1979), complete (orange) (includes grille, side mirrors, door handles, windshield wipers, front & rear bumpers, decals)
8130R Body, Chevrolet Blazer (1979), complete (red) (includes grille, side mirrors, door handles, windshield wipers, front & rear bumpers, decals)
8131 Decal sheet, Chevrolet Blazer (1979)
8132 Door handles, left, right & rear tailgate/ windshield wipers, left & right/ retainers (2)/ 1.6x5 BCS (self-tapping) (7) (fits #8130 body)
8134 Grille, Chevrolet Blazer (1979)/ grille retainers (4)/ headlight housing (2)/ lens (2)/ 2.6x8 BCS (4)/ 2.5x6 BCS (2) (fits #8130 body)
8133X Mirrors, side (folding) (fits #8130 body)
8133 Mirrors, side, chrome (left & right)/ o-rings (4)/ body clips (4) (fits #8130 body)

K5 BLAZER (82076-4)

8135 Tail lights, left & right (assembled)/ tail light retainers, left & right/ side marker lights (assembled) (2)/ side marker retainers (2)/ mounting tape (2)/ 1.6x5 BCS (self-tapping) (4)/ 2.6x8 BCS (2) (fits #8130 body)

Body (1979 Ford Bronco)

8010 **Body, Ford Bronco (1979) (clear, requires painting)/ decals/ window masks/ tailgate panel insert/ adhesive foam tape (2)**
8010X **Body, Ford Bronco (1979), complete (black) (includes front and rear bumpers, push bar, rear body mount, grille, side mirrors, door handles, windshield wipers, spare tire mount, red and sunset decals) (requires #8072 inner fenders)**
8078R **Decal sheet, Bronco, red (fits #8010 body)**
8075 **Door handles, left & right/ windshield wipers, left & right/ retainers (3)/ 1.6x5 BCS (self-tapping) (4) (fits #8010 body)**
8070 **Grille, Ford Bronco/ grille retainers (6)/ headlight housing (2)/ lens (2)/ 2.6x8 BCS (6)/ 2.5x6 BCS (2) (fits #8010 body)**
8073 **Mirrors, side, black (left & right)/ retainers (2)/ body clips (4) (fits #8010 body)**
8073X **Mirrors, side, chrome (left & right)/ retainers (2)/ body clips (4) (fits #8010 body)**
8076 **Side trim, left & right (chrome)/ retainers/ LED lens/ 2.6x8 BCS (24) (fits #8010 body)**
8074 **Spare tire mount/ mounting bracket/ spare tire cover/ mounting hardware**
8077 **Tailgate panel insert (clear, requires painting)/ adhesive foam tape (2) (fits #8010 body)**
8071 **Tailgate panel/ tail light lens (2) (left & right) (fits #8010 body)**

Body (Land Rover Defender)

8011 **Body, Land Rover® Defender® (clear, trimmed, requires painting)/ window masks/ decal sheet**
8011A **Body, Land Rover® Defender®, adventure orange (complete with ExoCage, inner fenders, fuel canisters, and jack)**
8011X **Body, Land Rover® Defender®, graphite silver (painted)/ decals**
8011R **Body, Land Rover® Defender®, red (painted)/ decals**
8012 **Decals, Land Rover® Defender®**
8016 **ExoCage (complete with assembly hardware; #8015 roof basket sold separately) (fits #8011 body)**
8019 **Fender brace, inner, front & rear**
8017 **Fender flares, front & rear (2 each) (fits #8011 or #8211 body)**
8018 **Fenders, inner, front & rear (2 each)/ rock light covers (8)**
8013 **Grille, Land Rover® Defender®/ grille mount (3)/ headlight housing (2)/ lens (2)/ headlight mount (2) (fits #8011 body)**
8020 **Mirrors, side (left & right)/ snorkel/ mounting hardware (fits #8011 body)**
8015 **Roof basket (requires #8016 ExoCage) (fits #8011 body)**
8021 **Spare tire mount/ mounting bracket/ screw pins (2)**
8014 **Tail light housing (2)/ lens (2)/ decals (left & right) (fits #8011 body)**

Body (Mercedes-Benz® G 500®)

8811 **Body, Mercedes-Benz® G 500® 4x4² (clear, requires painting)/ decals/ window masks (includes rear body post, grille, side mirrors, door handles, & windshield wipers)**
8812 **Decals, Mercedes-Benz® G 500® 4x4²**
8813X **Grille, Mercedes-Benz® G 500® 4x4²/ grille mount/ grille insert/ headlight lens (2)/ headlight reflector (2)/ reflector lens (2)/ bumperette front (2)/ bumperette mount (2)/ turn signal housing (2)/ turn signal housing retainer (2)/ turn signal len**
8817 **Mirrors, side, black (left & right)/ o-rings (4)/ windshield wipers, left, right, & rear/ wiper retainers (2)/ body clips (4)/ 1.6x5 BCS (self-tapping) (3)**
8822 **Roof visor/ visor retainer/ visor lens (2)/ 2.6x6 BCS (3)/ 3x4 GS (4)**
8816X **Side marker light housing (2)/ mount (2)/ lens (2)/ 1.6x7 BCS (self-tapping) (2)**
8814X **Tail light lens (2)/ tail light housing (2)/ tail light housing mount (2)/ reverse lens (2)/ 1.6x5 BCS (4) (left & right)**

Body (Tactical Unit)

8211X **Body, Tactical Unit, night camo (painted)/ decals**
8019 **Fender brace, inner, front & rear**
8017 **Fender flares, front & rear (2 each) (fits #8011 or #8211 body)**
8018 **Fenders, inner, front & rear (2 each)/ rock light covers (8)**
8020 **Mirrors, side (left & right)/ snorkel/ mounting hardware (fits #8011 body)**
8021 **Spare tire mount/ mounting bracket/ screw pins (2)**

Body (TRX-4® Sport)

8112 **Body with camper, TRX-4® Sport (clear, trimmed, requires painting)/ window masks/ decal sheet**
8111R **Body, TRX-4® Sport (clear, trimmed, die-cut for LED light kit, requires painting)/ window masks/ decal sheet**
8111 **Body, TRX-4® Sport (clear, trimmed, requires painting)/ window masks/ decal sheet**
8113 **Decal sheet, TRX-4® Sport**
8120X **Expedition rack, complete (includes traction boards, shovel, axe, jack, fire extinguisher, fuel cans, & mounting hardware) (fits #8111 or #8111R body)**
8120 **Expedition rack/ mounting hardware (fits #8111 or #8111R body)**
8116 **Grille/ grille retainers (2)/ grille mount/ lens (2)/ 2.5x8 BCS (6) (fits #8111 or #8112 body)**
8119 **Mirrors, side (left & right)/ snorkel/ mounting hardware (fits #8111 or #8112 body)**
8122 **Shovel/ axe/ accessory mount/ mounting hardware**
8118 **Spare tire mount/ mounting hardware**
8117 **Tailgate panel/ tailgate retainers (2)/ tailgate mount/ tail light lens (2) (left & right)/ 2.5x8 BCS (4) (fits #8111 or #8112 body)**
8121X **Traction boards, blue/ mounting hardware**
8121G **Traction boards, green/ mounting hardware**
8121A **Traction boards, yellow/ mounting hardware**
8121 **Traction boards/ mounting hardware**

Body Accessories

1926 **Antenna caps, vinyl (2)/ antenna spool**
1726 Antenna, tube (1)/ vinyl antenna cap (1)/ wire retainer (1)
1834 Body clips (12) (standard size)
1834A **Body clips, black (12) (standard size)**
3934 **Body clips, heavy duty (12)**
3934A **Body clips, heavy duty (black) (12)**
8215 **Body mounts & posts, front & rear (complete set)**
8115 Body posts, front & rear
4915 Body washers, foam adhesive (10)
2514 **Decal sheet, racing sponsors**
8081 **Fender extensions (4)/ 3x8 flat-head screws (24) (requires #8080 narrow inner fenders)**
8080 **Fenders, inner (narrow), front & rear (2 each)/ rock light covers (8)/ battery plate/ 3x8 flat-head screws (4)**
8072 Fenders, inner, front & rear (2 each)/ rock light covers (8)/ battery plate/ 3x8 flat-head screws (4)
9950 **Official Team Traxxas® racing decal set (flag logo/ 6-color)**

Bumpers & Skidplates

8234 **Bumper D-Rings, grey (front or rear)/ 2x12 CS (4)**
8234R **Bumper D-rings, red (front or rear)/ 2.0x12 CS (4)**
8067 Bumper mounts, front & rear
8067X **Bumper mounts, front & rear/ bumper mount, rear (offset)**
8237 Bumper mounts, front & rear/ screw pins (4)
8124 **Bumper, front (178mm wide)/ winch/ 2.6x8 BCS (1)**
8137 Bumper, front (chrome)/ bumper mount/ 3x10 BCS (2)
8235 **Bumper, front/ winch**
8236 **Bumper, rear**
8125 **Bumper, rear (176mm wide)**
8136 Bumper, rear (chrome)/ bumper mount/ 3x8 BCS (2)
8138 **Push bar, bumper, chrome (assembled) (fits #8137 bumper)**
8238 Skidplate/ lower gear cover

Chassis & Attachments

8215 Body mounts & posts, front & rear (complete set)
8224 Box, receiver (sealed)/ wire cover/ foam pads/ silicone grease/ 3x8 BCS (5)/ 2.5x8 CS (2)
8058 **Chassis conversion kit, TRX-4® (long to short wheelbase) (includes rear upper & lower suspension links, front & rear inner fenders, short female half shaft, battery tray, 3x8mm FCS (4))**
8057 **Chassis conversion kit, TRX-4® (short to long wheelbase) (includes rear upper & lower suspension links, front & rear shock towers, long female half shaft)**
8220 Chassis rails, 448mm (steel) (left & right)
8081 **Fender extensions (4)/ 3x8 flat-head screws (24) (requires #8080 narrow inner fenders)**
8080 **Fenders, inner (narrow), front & rear (2 each)/ rock light covers (8)/ battery plate/ 3x8 flat-head screws (4)**
8072 Fenders, inner, front & rear (2 each)/ rock light covers (8)/ battery plate/ 3x8 flat-head screws (4)
8218 Floor pans, left & right
8224X **Receiver box cover (for use only with #8224 receiver box & #2260 BEC)/ foam pads/ seals/ silicone grease**
8219 Rock sliders, left & right
8225 **Seal kit, receiver box (includes o-ring, seals, and silicone grease)**
8240X Servo mount, 2-speed/ servo mount, T-Lock/ wire clips
8239 Servo mount, steering/ chassis crossmember
8216 Shock towers, front & rear (left & right)
8226 Tray, battery

Differential Components

8281	Carrier, differential/ differential slider/ T-Lock fork
8280A	**Differential cover, front or rear (black)**
8280X	Differential cover, front or rear (chrome-plated)
8280	**Differential cover, front or rear (grey)**
8280R	**Differential cover, front or rear (red)**
8195	Differential, locking, front and rear (assembled) (includes T-Lock cables and servo)
8282	Gear set, differential (output gears (2), spider gears (4), spider gear shaft (2))
8295	Output drive, transmission or differential (pin retainer (1)/ drive cup (1)/ drive ball (1)/ drive pin (1)/ 3x11 screw pin (1)/ cross pin (black) (1) 3x6 BCS with threadlock (1))
8279	Ring gear, differential/ pinion gear, differential
8279R	**Ring gear, differential/ pinion gear, differential (machined)**
8287	**Ring gear, differential/ pinion gear, differential (overdrive, machined)**
8288	**Ring gear, differential/ pinion gear, differential (underdrive, machined)**
8297	**Spool/ differential housing plug/ e-clip**

Driveline Components

8250	Half shafts, center (internal splined, front (2) & internal splined, rear (2)/ external splined (2)/ pin retainer (4)) (plastic parts only)
8255A	Stub axle, extended (portal drive) (2)
8269	Wheel hubs, 12mm hex (2)/ stub axle pins (2) (steel)
8269X	**Wheel hubs, 12mm hex, 6061-T6 aluminum (blue-anodized) (4)/ screw pin (4)**
8269A	**Wheel hubs, 12mm hex, 6061-T6 aluminum (charcoal gray-anodized) (4)/ screw pin (4)**
8269G	**Wheel hubs, 12mm hex, 6061-T6 aluminum (green-anodized) (4)/ screw pin (4)**
8269R	**Wheel hubs, 12mm hex, 6061-T6 aluminum (red-anodized) (4)/ screw pin (4)**

Hardware

1552	Backplate screws (3x8mm cap-head machine) (6)/washers (6)/ wrench
1834	**Body clips (12) (standard size)**
1834A	Body clips, black (12) (standard size)
3934	**Body clips, heavy duty (12)**
3934A	**Body clips, heavy duty (black) (12)**
8167X	**Hardware kit, stainless steel, beadlock rings (contains stainless steel hardware for 4 wheels)**
8298	**Hardware kit, stainless steel, TRX-4® (contains all stainless steel hardware used on TRX-4)**
8151	**Hardware kit, stainless steel, TRX-4® High Lift Kit (contains all stainless steel hardware used on TRX-4® Long Arm Lift Kit)**
5476X	**Hex wrenches; 1.5mm, 2mm, 2.5mm, 3mm, 2.5mm ball**
3647	**Nuts, 4mm flanged nylon locking (steel, serrated) (8)**
8347	Nuts, 4mm flanged nylon locking, serrated (black) (10)
1747R	**Nuts, aluminum, flanged, serrated (4mm) (blue-anodized) (4)**
1747G	**Nuts, aluminum, flanged, serrated (4mm) (green-anodized) (4)**
1747P	**Nuts, aluminum, flanged, serrated (4mm) (pink-anodized) (4)**
1985	PTFE-coated washers, 5x8x0.5mm (20) (use with ball bearings)
8221	Screw pin, 3x10mm (6)
3229	Screws, 2.5x10mm cap-head machine (hex drive) (6)
2523	Screws, 2.5x10mm countersunk machine (hex drive) (6)
3236	Screws, 2.5x12mm cap-head machine (6)
2618	Screws, 2.5x16mm cap-head machine (6)
3215	Screws, 2.5x6mm cap-head machine (hex drive) (6)
2617	Screws, 2.5x8mm button-head machine (hex drive) (6)
3965	Screws, 2.5x8mm cap-head machine (6)
2524	Screws, 2.5x8mm countersunk machine (hex drive) (6)
8299	Screws, 2.6x12mm button-head, self-tapping (hex drive) (6)
8167	Screws, 2x10mm cap-head, self-tapping (hex drive) (10)
2564	Screws, 2x8mm cap-head machine (hex drive) (6)
2577	Screws, 3x10mm button-head machine (hex drive) (6)
4859	Screws, 3x10mm flat-head machine (hex drive) (4)
2578	Screws, 3x12mm button-head machine (hex drive) (6)
2579	Screws, 3x15mm button-head machine (hex drive) (6)
2591	Screws, 3x23mm button-head machine (hex drive) (6)
2581	Screws, 3x25mm button-head machine (hex drive) (6)
2616	Screws, 3x27mm button-head machine (hex drive) (6)
2582	Screws, 3x30mm button-head machine (hex drive) (6)
2575	Screws, 3x6mm button-head machine (hex drive) (6)
3932	Screws, 3x6mm flat-head machine (hex drive) (6)
2576	Screws, 3x8mm button-head machine (hex drive) (6)
3931	Screws, 3x8mm flat-head machine (hex drive) (6)
3933	Screws, 4x16mm button-head machine (hex drive) (6)

LED Light Accessories

8031	**3-in-1 wire harness, LED light kit**
8089	**4-in-2 wire harness, LED light kit**
8028	**LED lights, power supply (regulated, 3V, 0.5-amp)/ 3-in-1 wire harness**
8026X	**LED rock light kit, TRX-4®/TRX-6™ (requires #8028 power supply and #8018, #8072, or #8080 inner fenders)**

LED Lights (1969-1972 Chevrolet Blazer)

8090	**LED light set, complete with power supply (contains headlights, tail lights, side marker lights, & distribution block) (fits #9111 or 9112 body)**

LED Lights (1979 Chevrolet Blazer)

8039	**LED light set (contains headlights, tail lights, side marker lights, distribution block (fits #8130 body, requires #8028 power supply)**
8038	**LED light set, complete with power supply (contains headlights, tail lights, side marker lights, distribution block, and power supply) (fits #8130 body)**

LED Lights (1979 Ford Bronco)

8036	**LED light set (contains headlights, tail lights, side marker lights, & distribution block) (fits #8010 body, requires #8028 power supply)**
8035	**LED light set, complete with power supply (contains headlights, tail lights, side marker lights, & distribution block) (fits #8010 body)**
8037	**LED lights, high/low switch (for #8035 or #8036 LED light kits)**

LED Lights (Land Rover Defender)

8027	**LED headlight/tail light kit (fits #8011 body, requires #8028 power supply)**
8025	**LED light bar (Rigid®), TRX-4 (requires #8028 power supply)**
8029	**LED light bar kit (Rigid®)/power supply, TRX-4®**
8030	**LED light set, complete (contains rock light kit, LED light bar (Rigid®), LED headlight/tail light kit, power supply, & 3-in-1 wire harness) (fits #8011 body)**

LED Lights (Mercedes-Benz® G 500® 4x4²)

8899	**LED light set (contains headlights, tail lights, roof lights, and distribution block) (fits #8811 or #8825 body, requires #8028 power supply)**
8898	**LED light set, complete with power supply (contains headlights, tail lights, roof lights, & distribution block) (fits #8811 or #8825 body)**

LED Lights (TRX-4® Sport)

8086	**LED expedition rack scene light kit (fits #8111 body, requires #8028 power supply)**
8084	**LED headlight/tail light kit (fits #8111 or #8112 body, requires #8028 power supply)**
8088	**LED light bar, front bumper (fits #8124 front bumper, requires #8028 power supply)**
8087	**LED light bar, roof lights (fits #8111 body, requires #8028 power supply)**
8085	**LED light set, complete with power supply (contains headlights, tail lights, & distribution block) (fits #8111 or #8112 body)**

Long Arm Lift Kit

8162X	**Body, GTS shock, long (aluminum, blue-anodized) (1) (for use with #8140X TRX-4® Long Arm Lift Kit)**
8162R	**Body, GTS shock, long (aluminum, red-anodized) (1) (for use with #8140R TRX-4® Long Arm Lift Kit)**
8162	**Body, GTS shock, long (silver aluminum) (1) (for use with #8140 TRX-4® Long Arm Lift Kit)**
8148	**Cable, T-lock (extra long) (for use with TRX-4® Long Arm Lift Kit)**
8147	**Cable, T-lock (medium) (for use with TRX-4® Long Arm Lift Kit)**
8150	**Driveshaft extension kit, center (includes internal splined, x-long (2), internal splined, long (1) and internal splined, medium (1)) (for use with TRX-4® Long Arm Lift Kit)**
8140	**Long Arm Lift Kit, TRX-4®, complete**
8140X	**Long Arm Lift Kit, TRX-4®, complete (includes blue powder coated links, blue-anodized shocks)**
8140R	**Long Arm Lift Kit, TRX-4®, complete (includes red powder coated links, red-anodized shocks)**
8149	**Rod ends, extended (standard (4), angled (4))/ hollow balls (8) (for use with TRX-4® Long Arm Lift Kit)**
8141	**Servo mount, steering (for use with TRX-4® Long Arm Lift Kit)**
8161	**Shock shaft, 3x57mm (GTS) (2) (includes bump stops) (for use with TRX-4® Long Arm Lift Kit)**
8160X	**Shocks, GTS, aluminum (blue-anodized) (assembled without springs) (4) (for use with #8140X TRX-4® Long Arm Lift Kit)**
8160R	**Shocks, GTS, aluminum (red-anodized) (assembled without springs) (4) (for use with #8140R TRX-4® Long Arm Lift Kit)**

K5 BLAZER (82076-4)

8160 Shocks, GTS, silver aluminum (assembled without springs) (4) (for use with #8140 TRX-4® Long Arm Lift Kit)
8153 Springs, shock, long (natural finish) (GTS) (0.29 rate, white stripe) (for use with TRX-4® Long Arm Lift Kit)
8154 Springs, shock, long (natural finish) (GTS) (0.39 rate, orange stripe) (for use with TRX-4® Long Arm Lift Kit)
8155 Springs, shock, long (natural finish) (GTS) (0.47 rate) (included with TRX-4® Long Arm Lift Kit)
8156 Springs, shock, long (natural finish) (GTS) (0.54 rate, green stripe) (for use with TRX-4® Long Arm Lift Kit)
8157 Springs, shock, long (natural finish) (GTS) (0.62 rate, blue stripe) (for use with TRX-4® Long Arm Lift Kit)
8146X Steering link, 5x117mm (1)/ draglink, 5x60mm (1)/ panhard link, 5x63mm (blue powder coated steel) (assembled with hollow balls) (for use with #8140X TRX-4® Long Arm Lift Kit)
8146R Steering link, 5x117mm (1)/ draglink, 5x60mm (1)/ panhard link, 5x63mm (red powder coated steel) (assembled with hollow balls) (for use with #8140R TRX-4® Long Arm Lift Kit)
8144X Suspension link, front upper, 5x68mm (1) (blue powder coated steel) (assembled with hollow balls) (for use with #8140X TRX-4® Long Arm Lift Kit)
8144R Suspension link, front upper, 5x68mm (1) (red powder coated steel) (assembled with hollow balls) (for use with #8140R TRX-4® Long Arm Lift Kit)
8144 Suspension link, front upper, 5x68mm (1) (steel) (assembled with hollow balls) (for use with #8140 TRX-4® Long Arm Lift Kit)
8143 Suspension links, front lower (2) (5x104mm, steel) (assembled with hollow balls) (for use with #8140 TRX-4® Long Arm Lift Kit)
8143X Suspension links, front lower, blue (2) (5x104mm, powder coated steel) (assembled with hollow balls) (for use with #8140X TRX-4® Long Arm Lift Kit)
8143R Suspension links, front lower, red (2) (5x104mm, powder coated steel) (assembled with hollow balls) (for use with #8140R TRX-4® Long Arm Lift Kit)
8145 Suspension links, rear lower (2) (5x115mm, steel) (assembled with hollow balls) (for use with #8140 TRX-4® Long Arm Lift Kit)
8145X Suspension links, rear lower, blue (2) (5x115mm, powder coated steel) (assembled with hollow balls) (for use with #8140X TRX-4® Long Arm Lift Kit)
8145R Suspension links, rear lower, red (2) (5x115mm, powder coated steel) (assembled with hollow balls) (for use with #8140R TRX-4® Long Arm Lift Kit)
8142 Suspension links, rear upper (2) (5x115mm, steel) (assembled with hollow balls) (for use with #8140 TRX-4® Long Arm Lift Kit)
8142X Suspension links, rear upper, blue (2) (5x115mm, powder coated steel) (assembled with hollow balls) (for use with #8140X TRX-4® Long Arm Lift Kit)
8142R Suspension links, rear upper, red (2) (5x115mm, powder coated steel) (assembled with hollow balls) (for use with #8140R TRX-4® Long Arm Lift Kit)
8172 Tires and wheels, assembled (Method 105 2.2” black chrome beadlock wheels, Canyon Trail 5.3x2.2” tires, foam inserts) (1 left, 1 right)
8181 Tires and wheels, assembled, glued (TRX-4® Sport 2.2” wheels, Canyon Trail 5.3x2.2” tires) (2)
8170 Tires, Canyon Trail 5.3x2.2”/ foam inserts (2)
8171 Wheels, Method 105 2.2" (black chrome, beadlock) (beadlock rings sold separately)
8171A Wheels, Method 105 2.2" (charcoal gray, beadlock) (beadlock rings sold separately)
8180 Wheels, TRX-4® Sport 2.2 (2)

Motors & Electronics

1926 Antenna caps, vinyl (2)/ antenna spool
1726 Antenna, tube (1)/ vinyl antenna cap (1)/ wire retainer (1)
2262 BEC, complete (includes receiver box cover and seals)
2064 Gear set (for 2065 waterproof sub-micro servo)
2064X Gear set, metal (for 2065X waterproof sub-micro servo)
2072X Gear set, metal (for 2070, 2075 servos)
2252 Gear set, metal (for 2250, 2255 servos)
2072R Gear set, metal, high speed (for 2070, 2075 servos)
8290X Motor mount plate, 6061-T6 aluminum (blue-anodized)
8290A Motor mount plate, 6061-T6 aluminum (charcoal gray-anodized)
8290G Motor mount plate, 6061-T6 aluminum (green-anodized)
8290R Motor mount plate, 6061-T6 aluminum (red-anodized)
3975R Motor, Titan® 550, reverse rotation (21-turns/ 14 volts) (1)
8290 Plate, motor/ upper spur gear cover
2254 Servo case, aluminum (blue-anodized) (middle) (for 2250 servo)
2253 Servo case, aluminum (red-anodized) (middle) (for 2255 servo)
2251 Servo case, plastic (top, middle, bottom)/ gaskets/ hardware (for 2250, 2255 servos)
2063 Servo case/gaskets (for 2065 waterproof sub-micro servo)
2063X Servo case/gaskets (for 2065X metal gear, waterproof, sub-micro servo)
5669 Servo horn (with built-in spring and hardware) (for Summit locking differential)
2075R Servo, digital high-speed, metal gear (ball bearing), waterproof
2250 Servo, digital high-torque 330 coreless, metal gear (ball bearing), waterproof (#2262 external BEC and #8247X metal servo horn recommended for optimal performance)
2255 Servo, digital high-torque 400 brushless, metal gear (ball bearing), waterproof (#2262 external BEC and #8247X metal servo horn recommended for optimal performance)
2075X Servo, digital high-torque, metal gear (ball bearing), waterproof
2065 Servo, sub-micro, waterproof
2065X Servo, sub-micro, waterproof, metal gear
3025 XL-5HV 3s Electronic Speed Control, waterproof (low-voltage detection, fwd/rev/brake)
2261 Y-harness, BEC

Radio System, Batteries & Chargers

2849X 4000mAh 11.1v 3-Cell 25C LiPo Battery
2872X 5000mAh 11.1v 3-Cell 25C LiPo Battery
2842X 5000mAh 7.4v 2-Cell 25C LiPo Battery
2843X 5800mAh 7.4v 2-Cell 25C LiPo Battery
2869X 7600mAh 7.4v 2-Cell 25C LiPo Battery
2976 AC to DC converter, 40W
2938X Adapter, Traxxas® iD® LiPo battery (adapts Traxxas iD batteries to separate balance ports)
1726 Antenna, tube (1)/ vinyl antenna cap (1)/ wire retainer (1)
2943 Battery charge indicators (green (4), blue (4), grey (4))
6548 Battery door, transmitter (replacement for #6516, 6517, 6528, 6529, 6530 transmitters)
8222 Battery strap (for 2200 2-cell and 1400 3-cell LiPo batteries)
2914 Battery, Power Cell AA Alkaline (4)
2923X Battery, Power Cell, 3000mAh (NiMH, 7-C flat, 8.4V)
2940X Battery, Series 3 Power Cell, 3300mAh (NiMH, 7-C flat, 8.4V)
2950X Battery, Series 4 Power Cell, 4200mAh (NiMH, 7-C flat, 8.4V)
2960X Battery, Series 5 Power Cell, 5000mAh (NiMH, 7-C flat, 8.4V)
2983 Battery/charger completer pack (includes #2969 2-amp NiMH peak detecting AC charger (1), #2923X 3000mAh 8.4V 7-cell NiMH battery (1))
2992 Battery/charger completer pack (includes #2970 iD® charger (1), #2843X 5800mAh 7.4V 2-cell 25C LiPo battery (1))
2994 Battery/charger completer pack (includes #2970 iD® charger (1), #2849X 4000mAh 11.1v 3-Cell 25C LiPo Battery (1))
2991 Battery/charger completer pack (includes #2972 Dual iD® charger (1), #2869X 7600mAh 7.4V 2-cell 25C LiPo battery (2))
2262 BEC, complete (includes receiver box cover and seals)
2975 Charger, DC, 4 amp (6 - 7 cell, 7.2 - 8.4 volt, NiMH)
2972 Charger, EZ-Peak® Dual, 100W, NiMH/LiPo with iD® Auto Battery Identification
2973 Charger, EZ-Peak® Live Dual, 200W, NiMH/LiPo with iD® Auto Battery Identification
2971 Charger, EZ-Peak® Live, 100W, NiMH/LiPo with iD® Auto Battery Identification
2970 Charger, EZ-Peak® Plus, 4 amp, NiMH/LiPo with iD® Auto Battery Identification
6525 Communication link, telemetry expander
6541 Connector, power tap (with cable) (long)/ wire tie
6512 Cover plate, Traxxas Link™ Wireless Module
2978 Fuse, charger, 5A (2) (for #2974, 2975, 2977)
2064 Gear set (for 2065 waterproof sub-micro servo)
2064X Gear set, metal (for 2065X waterproof sub-micro servo)
2072X Gear set, metal (for 2070, 2075 servos)
2252 Gear set, metal (for 2250, 2255 servos)
2072R Gear set, metal, high speed (for 2070, 2075 servos)
2968X LiPo cell voltage checker/balancer (includes #2938X adapter for Traxxas® iD® batteries)
2968 LiPo cell voltage checker/balancer (requires #2938X adapter for Traxxas® iD® batteries)
6561 Mount, telemetry expander
6535 Mount, temperature sensor (electric motors)/ wire tie/ thermal pad
6533 Receiver, micro, TQi 2.4GHz with telemetry & TSM (5-channel)
6552 Seal kit, expander box (includes o-ring, seals, and silicone grease)
6526 Sensor, auto-detectable, temperature
6527 Sensor, auto-detectable, voltage
6521 Sensor, temperature and voltage (long)
2254 Servo case, aluminum (blue-anodized) (middle) (for 2250 servo)
2253 Servo case, aluminum (red-anodized) (middle) (for 2255 servo)
2251 Servo case, plastic (top, middle, bottom)/ gaskets/ hardware (for 2250, 2255 servos)
2063 Servo case/gaskets (for 2065 waterproof sub-micro servo)
2063X Servo case/gaskets (for 2065X metal gear, waterproof, sub-micro servo)

2075R	**Servo, digital high-speed, metal gear (ball bearing), waterproof**
2250	**Servo, digital high-torque 330 coreless, metal gear (ball bearing), waterproof (#2262 external BEC and #8247X metal servo horn recommended for optimal performance)**
2255	**Servo, digital high-torque 400 brushless, metal gear (ball bearing), waterproof (#2262 external BEC and #8247X metal servo horn recommended for optimal performance)**
2075X	Servo, digital high-torque, metal gear (ball bearing), waterproof
2065	Servo, sub-micro, waterproof
2065X	**Servo, sub-micro, waterproof, metal gear**
6553X	**Telemetry expander 2.0 and GPS module 2.0, TQi radio system**
6550X	**Telemetry expander 2.0, TQi radio system (for use only with #6551X GPS module)**
6551X	**Telemetry GPS module 2.0, TQi radio system (for use only with #6550X telemetry expander)**
6509R	**TQi 2.4 GHz High Output radio system, 2-channel, Traxxas Link™ enabled, TSM (2-ch transmitter, 5-ch micro receiver)**
6507R	**TQi 2.4 GHz High Output radio system, 4-channel with Traxxas Link™ Wireless Module, TSM (4-ch transmitter, 5-ch micro receiver)**
6530	Transmitter, TQi Traxxas Link™ enabled, 2.4GHz high output, 4-channel (transmitter only)
6511	**Traxxas Link™ Wireless Module**
2261	**Y-harness, BEC**

Ready-To-Race Model

82076-4	TRX-4® Scale and Trail™ Crawler with 1979 Chevrolet Blazer Body: 4WD Electric Truck with TQi Traxxas Link™ Enabled 2.4GHz Radio System

Scale Details

8120X	**Expedition rack, complete (includes traction boards, shovel, axe, jack, fire extinguisher, fuel cans, & mounting hardware) (fits #8111 or #8111R body)**
8022T	**Fuel canisters (black) (2)/ 3x8 FCS (1)**
8022R	**Fuel canisters (blue) (2)/ 3x8 FCS (1)**
8022	**Fuel canisters (red) (2)/ 3x8 FCS (1)**
8022X	**Fuel canisters (white) (2)/ 3x8 FCS (1)**
8022A	**Fuel canisters (yellow) (2)/ 3x8 FCS (1)**
8023T	**Jack (black) (1)/ 2x8 BCS (1)**
8023	**Jack (red) (1)/ 2x8 BCS (1)**
8122	**Shovel/ axe/ accessory mount/ mounting hardware**
8121X	**Traction boards, blue/ mounting hardware**
8121G	**Traction boards, green/ mounting hardware**
8121A	**Traction boards, yellow/ mounting hardware**
8121	**Traction boards/ mounting hardware**

Shocks (GTS)

8266	Body, GTS shock (aluminum, silver-anodized) (1)
8266X	**Body, GTS shock (hard-anodized, PTFE-coated aluminum) (1)**
8266A	**Body, GTS shock, aluminum (blue-anodized) (1)**
8266G	**Body, GTS shock, aluminum (green-anodized) (1)**
8266R	**Body, GTS shock, aluminum (red-anodized) (1)**
8264	Caps & spring retainers, GTS shocks (upper cap (2)/ hollow balls (4)/ bottom cap (2)/ upper retainer (2)/ lower retainer (2))
8274	**Hollow ball set, complete, TRX-4® (aluminum, PTFE-coated)**
5475	Multi-tool (plastic)
8261	**Piston, damper (red) (4)/ e-clips (8)**
8262	Rebuild kit, GTS shocks (x-rings, o-rings, pistons, bushings, e-clips, and rod ends)
8263	Shock shaft, 3x47mm (GTS) (2)
8263T	**Shock shaft, 3x47mm (GTS) (titanium nitride-coated) (2)**
8260X	**Shocks, GTS hard-anodized, PTFE-coated aluminum bodies with TiN shafts (assembled with spring retainers) (2)**
8260A	**Shocks, GTS, aluminum (blue-anodized) (assembled with spring retainers) (2)**
8260G	**Shocks, GTS, aluminum (green-anodized) (assembled with spring retainers) (2)**
8260R	**Shocks, GTS, aluminum (red-anodized) (assembled with spring retainers) (2)**
8260	Shocks, GTS, silver aluminum (assembled with spring retainers) (2)
1666	Silicone shock oil (30 wt)

Slipper Clutch Components

8292	Input shaft/ output shaft (transmission)
8286	Output shafts (transfer case), front & rear
8254	Rebuild kit, slipper clutch (steel disc (2)/ friction insert (2)/ 4.0mm NL (1)/ spring washers (4), metal washer (1))
8249	**Slipper eliminator plate**

Springs

8042	**Springs, shock (natural finish) (GTS) (0.22 rate, yellow stripe) (2)**
8043	**Springs, shock (natural finish) (GTS) (0.30 rate, white stripe) (2)**
8044	**Springs, shock (natural finish) (GTS) (0.39 rate, orange stripe) (2)**
8041	Springs, shock (natural finish) (GTS) (0.45 rate) (2)
8040	**Springs, shock (natural finish) (GTS) (0.54 rate, green stripe) (2)**
8045	**Springs, shock (natural finish) (GTS) (0.61 rate, blue stripe) (2)**

Spur Gears & Pinion Gears

6746	**Gear, 10-T pinion (32-p) (steel)/ set screw**
6747	Gear, 11-T pinion (32-p) (steel)/ set screw
3942X	**Gear, 12-T pinion (32-p), heavy duty (machined, hardened steel)/ set screw**
3943X	**Gear, 13-T pinion (32-p), heavy duty (machined, hardened steel)/ set screw**
3944X	**Gear, 14-T pinion (32-p), heavy duty (machined, hardened steel)/ set screw**
3945X	**Gear, 15-T pinion (32-p), heavy duty (machined, hardened steel)/ set screw**
3946X	**Gear, 16-T pinion (32-p), heavy duty (machined, hardened steel)/ set screw**
3947X	**Gear, 17-T pinion (32-p), heavy duty (machined, hardened steel)/ set screw**
3948X	**Gear, 18-T pinion (32-p), heavy duty (machined, hardened steel)/ set screw**
3949X	**Gear, 19-T pinion (32-p), heavy duty (machined, hardened steel)/ set screw**
3950X	**Gear, 20-T pinion (32-p), heavy duty (machined, hardened steel)/ set screw**
3951X	**Gear, 21-T pinion (32-p), heavy duty (machined, hardened steel)/ set screw**
3952X	**Gear, 22-T pinion (32-p), heavy duty (machined, hardened steel)/ set screw**
6745	**Gear, 9-T pinion (32-p) (steel)/ set screw**
8052	Spur gear, 39-tooth (32-pitch)
8053	**Spur gear, 45-tooth (32-pitch)**

Steering Components

8232	Caster blocks (portal drive), left & right/ kingpin bushings (4)
8232X	**Caster blocks, 6061-T6 aluminum (blue-anodized), left and right**
8232A	**Caster blocks, 6061-T6 aluminum (charcoal gray-anodized), left and right**
8232G	**Caster blocks, 6061-T6 aluminum (green-anodized), left and right**
8232R	**Caster blocks, 6061-T6 aluminum (red-anodized), left and right**
2072X	Gear set, metal (for 2070, 2075 servos)
2072R	**Gear set, metal, high speed (for 2070, 2075 servos)**
8274	**Hollow ball set, complete, TRX-4® (aluminum, PTFE-coated)**
5355	Hollow ball, tall centered (2)/ tall offset hollow ball (2)/ bump steer adjustment shims; 3.5mm (2), 1.17mm (2)
8275	Rod end set, complete (standard (10), angled 10-degrees (8), offset (4))
8276	Rod ends (10)
8277	Rod ends, angled 10-degrees (8)
2742	Rod ends, long (6)/ hollow ball connectors (6)
8278	Rod ends, offset (4)
8247X	Servo horn, steering, metal/ 3x14 BCS (1)
2075R	**Servo, digital high-speed, metal gear (ball bearing), waterproof**
2075X	Servo, digital high-torque, metal gear (ball bearing), waterproof
5529	Shim set, 3x7x1mm (2), 3x6x0.5mm (4), 3x7x2mm (2)/ hollow balls, captured (4)
8246	Steering link, 5x60mm (1)/ draglink, 5x117mm (1) (steel)
8243	Suspension link, front, 5x100mm (lower) (steel) (2)
8244	Suspension link, front, 5x63mm (upper) (steel) (2)
8245	**Suspension link, rear, 5x121mm (upper or lower) (steel) (2)**

Suspension Linkage

8058	**Chassis conversion kit, TRX-4® (long to short wheelbase) (includes rear upper & lower suspension links, front & rear inner fenders, short female half shaft, battery tray, 3x8mm FCS (4))**
8057	**Chassis conversion kit, TRX-4® (short to long wheelbase) (includes rear upper & lower suspension links, front & rear shock towers, long female half shaft)**
8274	**Hollow ball set, complete, TRX-4® (aluminum, PTFE-coated)**
5355	Hollow ball, tall centered (2)/ tall offset hollow ball (2)/ bump steer adjustment shims; 3.5mm (2), 1.17mm (2)
8275	Rod end set, complete (standard (10), angled 10-degrees (8), offset (4))
8276	Rod ends (10)
8277	Rod ends, angled 10-degrees (8)
2742	Rod ends, long (6)/ hollow ball connectors (6)
8278	Rod ends, offset (4)
5529	Shim set, 3x7x1mm (2), 3x6x0.5mm (4), 3x7x2mm (2)/ hollow balls, captured (4)
8243	Suspension link, front, 5x100mm (lower) (steel) (2)
8244	Suspension link, front, 5x63mm (upper) (steel) (2)
8248	Suspension link, rear, 5x109mm (upper or lower) (steel) (2)
8245	**Suspension link, rear, 5x121mm (upper or lower) (steel) (2)**

K5 BLAZER (82076-4)

Team Traxxas Items

2514	**Decal sheet, racing sponsors**
6160X	**DVD, Maxx® Power! Full Throttle Action (sleeve)**
9950	**Official Team Traxxas® racing decal set (flag logo/ 6-color)**
9909	**Traxxas® racing banner, red & black (3x7 feet)**

Tires & Wheels

8169T	**Beadlock rings, black (1.9") (aluminum) (4)/ 2x10 CS (48)**
8168T	**Beadlock rings, black (2.2") (aluminum) (4)/ 2x10 CS (48)**
8169X	**Beadlock rings, blue (1.9") (aluminum) (4)/ 2x10 CS (48)**
8168X	**Beadlock rings, blue (2.2") (aluminum) (4)/ 2x10 CS (48)**
8169G	**Beadlock rings, green (1.9") (aluminum) (4)/ 2x10 CS (48)**
8168G	**Beadlock rings, green (2.2") (aluminum) (4)/ 2x10 CS (48)**
8169A	**Beadlock rings, orange (1.9") (aluminum) (4)/ 2x10 CS (48)**
8168A	**Beadlock rings, orange (2.2") (aluminum) (4)/ 2x10 CS (48)**
8169R	**Beadlock rings, red (1.9") (aluminum) (4)/ 2x10 CS (48)**
8168R	**Beadlock rings, red (2.2") (aluminum) (4)/ 2x10 CS (48)**
8169	**Beadlock rings, satin (1.9") (aluminum) (4)/ 2x10 CS (48)**
8168	**Beadlock rings, satin (2.2") (aluminum) (4)/ 2x10 CS (48)**
8164	Center caps, wheel (chrome) (4)/ decal sheet (requires #8255A extended stub axle)
8176	**Center caps, wheel (chrome) (4)/ decal sheet (requires #8255A extended stub axle)**
8174	**Tires and wheels, assembled (Method 105 1.9" black chrome beadlock wheels, Canyon Trail 4.6x1.9" tires, foam inserts) (1 left, 1 right)**
8172	**Tires and wheels, assembled (Method 105 2.2" black chrome beadlock wheels, Canyon Trail 5.3x2.2" tires, foam inserts) (1 left, 1 right) (for use with TRX-4 Long Arm Lift Kit)**
8166X	**Tires and wheels, assembled, glued (1.9" chrome wheels, Canyon Trail 4.6x1.9" tires) (4)/ center caps (4)/ decal sheet (requires #8255A extended stub axle)**
8166	Tires and wheels, assembled, glued (1.9" chrome wheels, Canyon Trail 4.6x1.9" tires) (2)/ center caps (2)/ decal sheet (requires #8255A extended stub axle)
8177	**Tires and wheels, assembled, glued (1.9" chrome wheels, Canyon Trail 4.6x1.9" tires) (2)/ center caps (2)/ decal sheet (requires #8255A extended stub axle)**
8183X	**Tires and wheels, assembled, glued (1.9" classic chrome wheels, Canyon Trail 4.6x1.9" tires) (4)/ center caps (4) (requires #8255A extended stub axle)**
8273	**Tires and wheels, assembled, glued (Tactical 1.9" wheels, Canyon Trail 4.6x1.9" tires) (2)**
8272X	**Tires and wheels, assembled, glued (TRX-4® 1.9" satin beadlock wheels, Canyon Trail 4.6x1.9" tires) (2)**
8272	**Tires and wheels, assembled, glued (TRX-4® 1.9" wheels, Canyon Trail 4.6x1.9" tires) (2)**
8179	**Tires and wheels, assembled, glued (TRX-4® Sport 1.9" wheels, Canyon Trail 4.6x1.9" tires) (2)**
8181	**Tires and wheels, assembled, glued (TRX-4® Sport 2.2" wheels, Canyon Trail 5.3x2.2" tires) (2) (for use with TRX-4 Long Arm Lift Kit)**
8270	Tires, Canyon Trail 4.6x1.9" (S1 compound)/ foam inserts (2)
8170	**Tires, Canyon Trail 5.3x2.2"/ foam inserts (2) (for use with TRX-4 Long-Arm Lift Kit)**
8269	Wheel hubs, 12mm hex (2)/ stub axle pins (2) (steel)
8269X	**Wheel hubs, 12mm hex, 6061-T6 aluminum (blue-anodized) (4)/ screw pin (4)**
8269A	**Wheel hubs, 12mm hex, 6061-T6 aluminum (charcoal gray-anodized) (4)/ screw pin (4)**
8269G	**Wheel hubs, 12mm hex, 6061-T6 aluminum (green-anodized) (4)/ screw pin (4)**
8269R	**Wheel hubs, 12mm hex, 6061-T6 aluminum (red-anodized) (4)/ screw pin (4)**
8165	Wheels, 1.9", chrome (2)/ center caps (2)/ decal sheet (requires #8255A extended stub axle)
8175	**Wheels, 1.9", chrome (2)/ center caps (2)/ decal sheet (requires #8255A extended stub axle)**
8173	**Wheels, Method 105 1.9" (black chrome, beadlock) (beadlock rings sold separately)**
8173A	**Wheels, Method 105 1.9" (charcoal gray, beadlock) (beadlock rings sold separately)**
8171	**Wheels, Method 105 2.2" (black chrome, beadlock) (beadlock rings sold separately) (for use with TRX-4 Long Arm Lift Kit)**
8171A	**Wheels, Method 105 2.2" (charcoal gray, beadlock) (beadlock rings sold separately) (for use with TRX-4 Long Arm Lift Kit)**
8268	**Wheels, Tactical 1.9 (2)**
8271	**Wheels, TRX-4® 1.9 (2)**
8271X	**Wheels, TRX-4® 1.9 (satin beadlock) (2)**
8178	**Wheels, TRX-4® Sport 1.9 (2)**
8180	**Wheels, TRX-4 Sport 2.2 (2) (for use with TRX-4 Long Arm Lift Kit)**

Transmission Components

8283	Cable, T-lock (front)
8284	Cable, T-lock (rear)
8195	Differential, locking, front and rear (assembled) (includes T-Lock cables and servo)
8289	Drive hub, 2-speed/ shift dog/ shift fork/ 2-speed linkage
8293X	Gear set, transmission, metal (includes 18T, 30T input gears, 36T output gear, 2x9.8 pins (5))
8291	Gearbox housing (includes main housing, front housing, & cover)
8285	Gears, transfer case (3)
5041	Grease, premium high performance (20cc)
8292	Input shaft/ output shaft (transmission)
8290X	**Motor mount plate, 6061-T6 aluminum (blue-anodized)**
8290A	**Motor mount plate, 6061-T6 aluminum (charcoal gray-anodized)**
8290G	**Motor mount plate, 6061-T6 aluminum (green-anodized)**
8290R	**Motor mount plate, 6061-T6 aluminum (red-anodized)**
8295	Output drive, transmission or differential (pin retainer (1)/ drive cup (1)/ drive ball (1)/ drive pin (1)/ 3x11 screw pin (1)/ cross pin (black) (1) 3x6 BCS with threadlock (1))
8294	Output gear, high range, 24T (metal)
8286	Output shafts (transfer case), front & rear
8290	Plate, motor/ upper spur gear cover
8249	**Slipper eliminator plate**
8296	**Transmission gears, single speed, metal**
8196	Two speed conversion kit

Traxxas Tools

3433X	**Body reamer (aluminum handle)**
3433	**Body reamer (plastic handle)**
3436	**Cap, body reamer**
3432	**Scissors, curved tip**
3431	**Scissors, straight tip**
8712	**Speed Bit Essentials Set, hex and nut driver, 7-piece, includes premium handle (medium), travel pouch, hex drivers (straight: 1.5mm, 2.0mm, 2.5mm) and nut drivers (5.0mm, 5.5mm, 7.0mm, and 8.0mm), 1/4" drive**
8721	**Speed bit handle, medium (one piece)**
8720	**Speed bit handle, premium, large (rubber overmold)**
8722	**Speed bit handle, premium, medium (rubber overmold)**
8710	**Speed Bit Master Set, hex and nut driver, 13-piece, includes premium handle (medium), travel pouch, hex drivers (straight: 1.5mm, 2.0mm, 2.5mm, 3.0mm), (ball-end: 2.0mm, 2.5mm, 3.0mm), and nut drivers (4.00mm, 4.50mm, 5.00mm, 5.50mm, 7.00mm, 8.00mm),**
8711	**Speed Bit Master Set, hex driver, 7-piece straight and ball end, includes premium handle (medium), travel pouch, hex drivers (straight: 1.5mm, 2.0mm, 2.5mm, 3.0mm) (ball end: 2.0mm, 2.5mm, 3.0mm), 1/4" drive**
8719	**Speed Bit Master Set, nut driver, 6-piece, includes premium handle (medium), travel pouch, and nut drivers (4.0mm, 4.5mm, 5.0mm, 5.5mm, 7.0mm, 8.0mm), 1/4" drive**
8716	**Speed Bit Set, hex driver, 2-piece ball-end (2.0mm, 2.5mm), 1/4" drive**
8716X	**Speed Bit Set, hex driver, 3-piece ball-end (2.0mm, 2.5mm, 3.0mm), 1/4" drive**
8715	**Speed Bit Set, hex driver, 3-piece straight (1.5mm, 2.0mm, 2.5mm), 1/4" drive**
8715X	**Speed Bit Set, hex driver, 4-piece straight (1.5mm, 2.0mm, 2.5mm, 3.0mm), 1/4" drive**
3415	**Tool set with pouch (includes 1.5mm, 2.0mm, 2.5mm, 3.0mm, 3.5mm, 4mm drivers/ 4mm, 5mm, 5.5mm, 7mm and 8mm nut drivers/ 2mm, 4mm, and 5mm slotted screwdrivers/ #00 Phillips, #0 Phillips, and #1 Phillips screwdrivers/ 4mm and 8mm wrench/ driver handle**

TRX-4® Traxx™	
8889	Bearing retainers, inner (2), outer (2)
8890	Drive wheel (1)
8885	Shock mounts (frame, left (2), frame, right (2))/ portal mounts (1 each, front (left & right), rear (left & right))
8888	Spring (4)
8887	Stub axle (1)
8886	Stub axle nut (4)
8891	Tension wheels (6)/ road wheels (4)
8881	Traxx™, front, left (assembled) (requires #8886 stub axle, #7061 GTR shock, & #8878 or #8895 rubber track)
8882	Traxx™, front, right (assembled) (requires #8886 stub axle, #7061 GTR shock, & #8878 or #8895 rubber track)
8883	Traxx™, rear, left (assembled) (requires #8886 stub axle, #7061 GTR shock, & #8879 or #8896 rubber track)
8884	Traxx™, rear, right (assembled) (requires #8886 stub axle, #7061 GTR shock, & #8879 or #8896 rubber track)
8880	Traxx™, TRX-4® (4) (complete set, front & rear)
8895	Treads, All-Terrain, TRX-4® Traxx™ (front, left or right) (rubber) (1)
8896	Treads, All-Terrain, TRX-4® Traxx™ (rear, left or right) (rubber) (1)

If you have questions or need technical assistance, call Traxxas at:

1-888-TRAXXAS

(1-888-872-9927) (U.S. residents only)

For orders, calls outside the U.S., and other information, call 972-549-3000, or fax to 972-549-3011 e-mail Traxxas at support@Traxxas.com

TRAXXAS.COM

Mercedes-Benz G 500 4×4²

TRX-4

MODEL 82096-4

4WD ELECTRIC
SCALE & TRAIL™ CRAWLER



TQi 2.4GHz TRANSMITTER

TITAN 21T 550 MOTOR AND XL-5 HV ELECTRONIC SPEED CONTROL

GTS ALUMINUM SHOCKS

"Mercedes-Benz", and the design of the enclosed product are subject to intellectual property protection owned by Daimler AG. They are used by Traxxas LP under license.

A STUNNING ACHIEVEMENT IN SCALE DETAIL AND REALISM

In 2015, Mercedes-Benz released the limited-production G 500 4x4² to stake its claim as the ultimate off-road vehicle. Outfitted with a powerful V8 engine, dynamic 4WD system, and military-grade portal axles, the G 500 4x4² had no equal. Traxxas honors the engineering masterpiece that is the G-Class with this highly-detailed RC replica. Based on the class-leading TRX-4®, the Traxxas Mercedes-Benz G 500 4x4² features portal axles, a high/low transmission, and locking differentials for superior all-terrain capability. The highly detailed body with unique wheels and tires makes this truck a fitting tribute to the legendary original.

TRX-4 Front Assembly

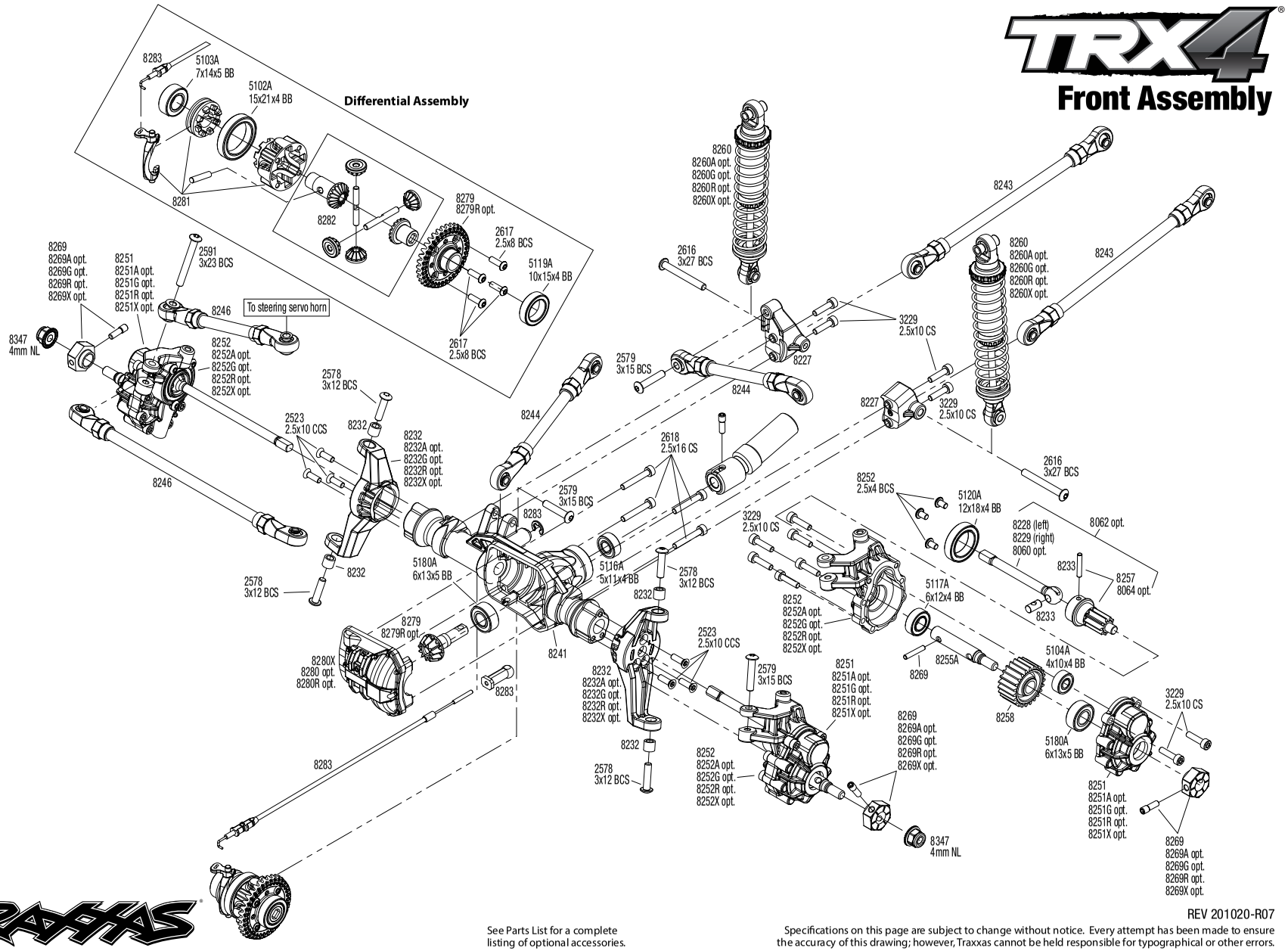

See Parts List for a complete listing of optional accessories.

REV 201020-R07

Specifications on this page are subject to change without notice. Every attempt has been made to ensure the accuracy of this drawing; however, Traxxas cannot be held responsible for typographical or other errors.

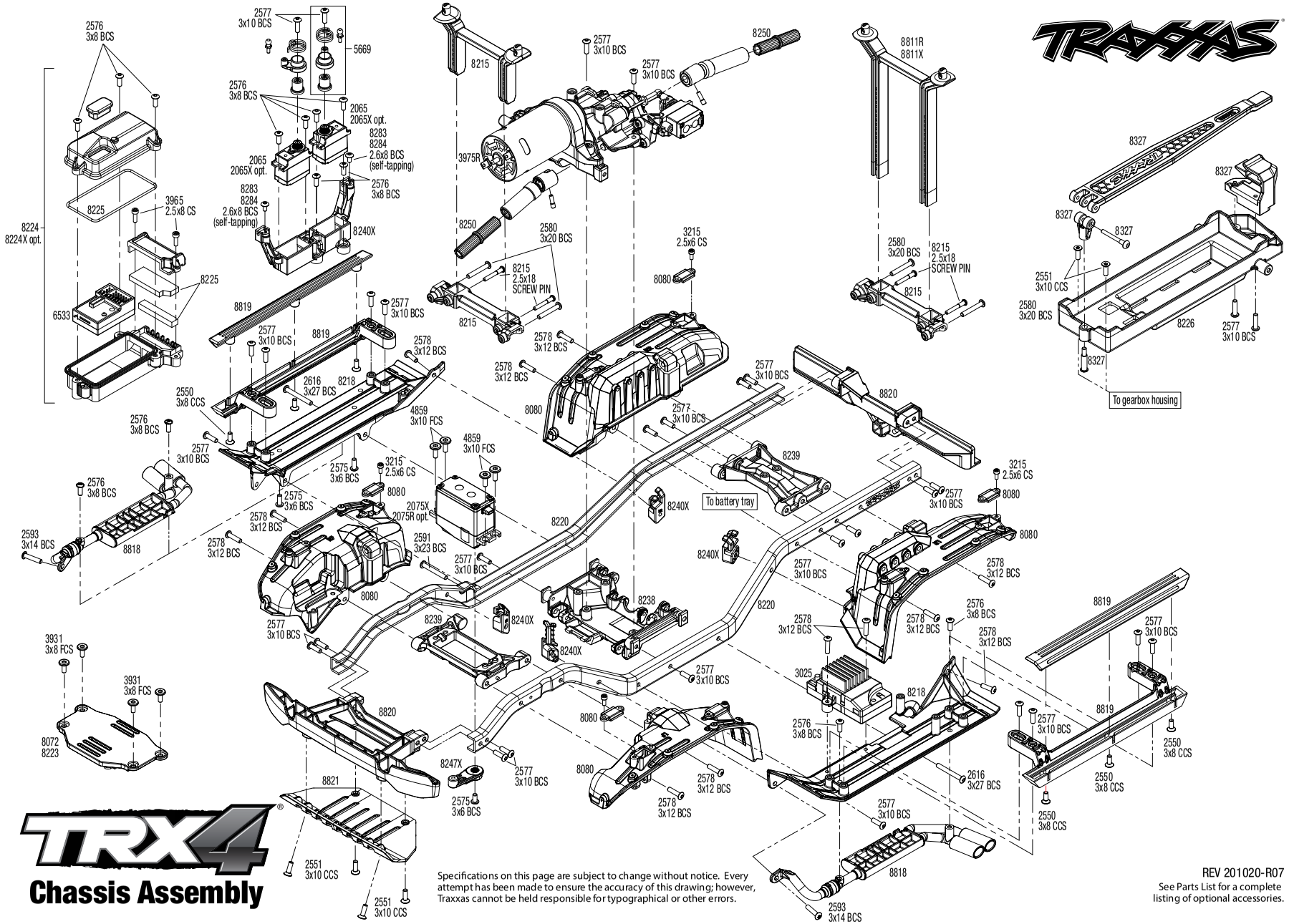

TRX4 Chassis Assembly

Specifications on this page are subject to change without notice. Every attempt has been made to ensure the accuracy of this drawing; however, Traxxas cannot be held responsible for typographical or other errors.

REV 201020-R07

See Parts List for a complete listing of optional accessories.

TRAXXAS

TRX4®

Rear Assembly

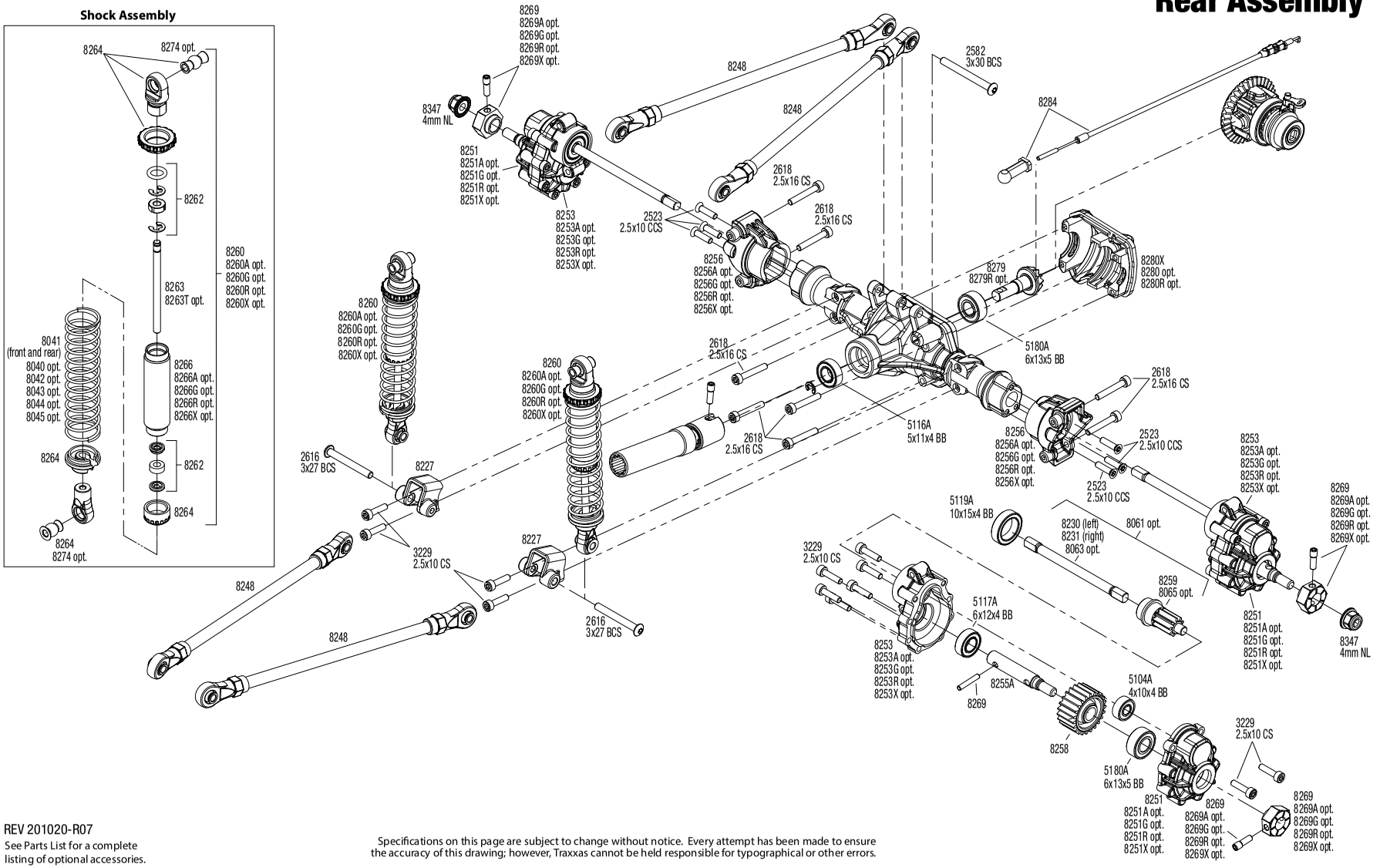

REV 201020-R07

See Parts List for a complete listing of optional accessories.

Specifications on this page are subject to change without notice. Every attempt has been made to ensure the accuracy of this drawing; however, Traxxas cannot be held responsible for typographical or other errors.

Transmission Assembly

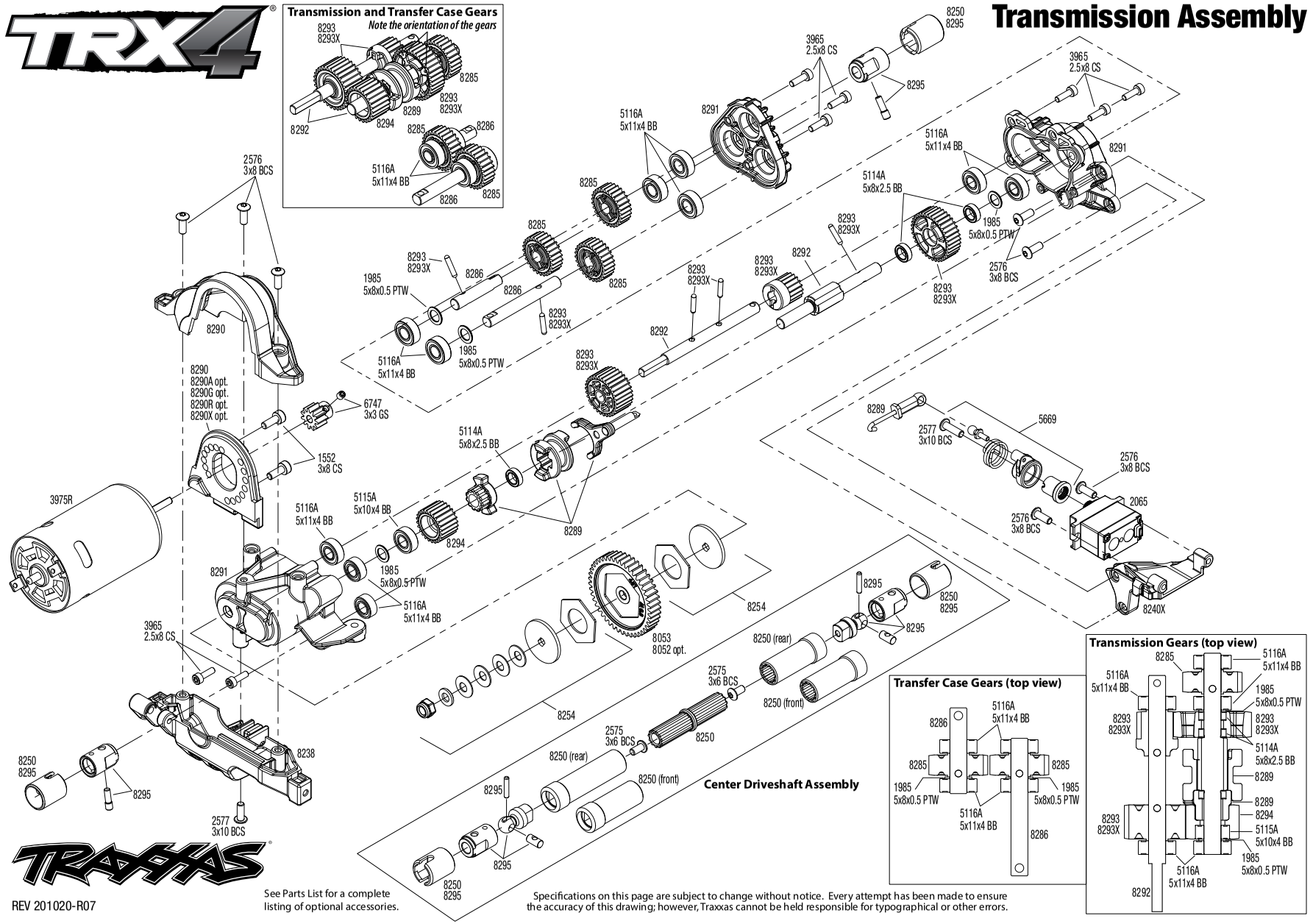

REV 201020-R07

See Parts List for a complete listing of optional accessories.

Specifications on this page are subject to change without notice. Every attempt has been made to ensure the accuracy of this drawing; however, Traxxas cannot be held responsible for typographical or other errors.

TRX-4

Body Assembly

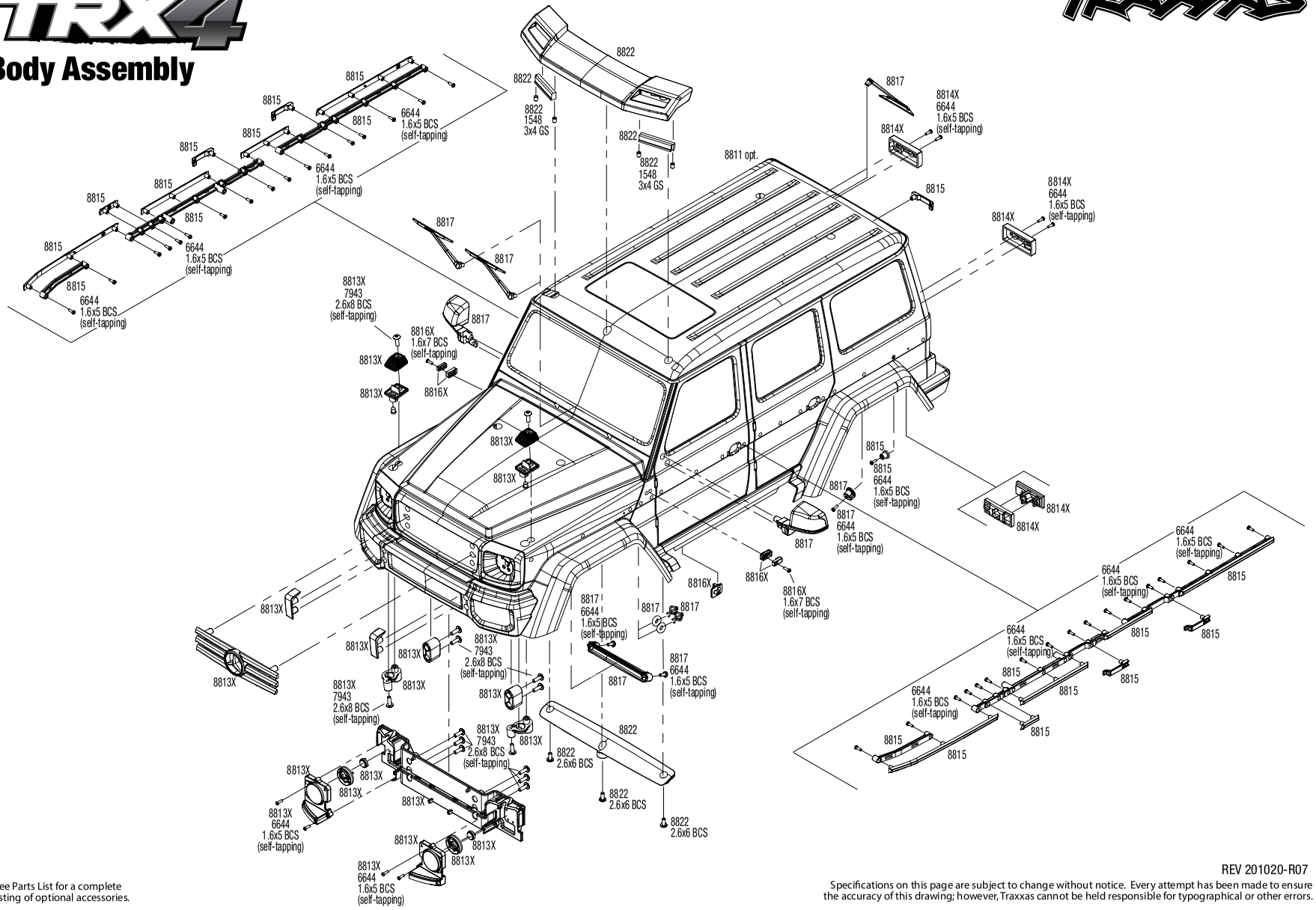

See Parts List for a complete listing of optional accessories.

REV 201020-R07

Specifications on this page are subject to change without notice. Every attempt has been made to ensure the accuracy of this drawing; however, Traxxas cannot be held responsible for typographical or other errors.

TRX4

Link Dimensions

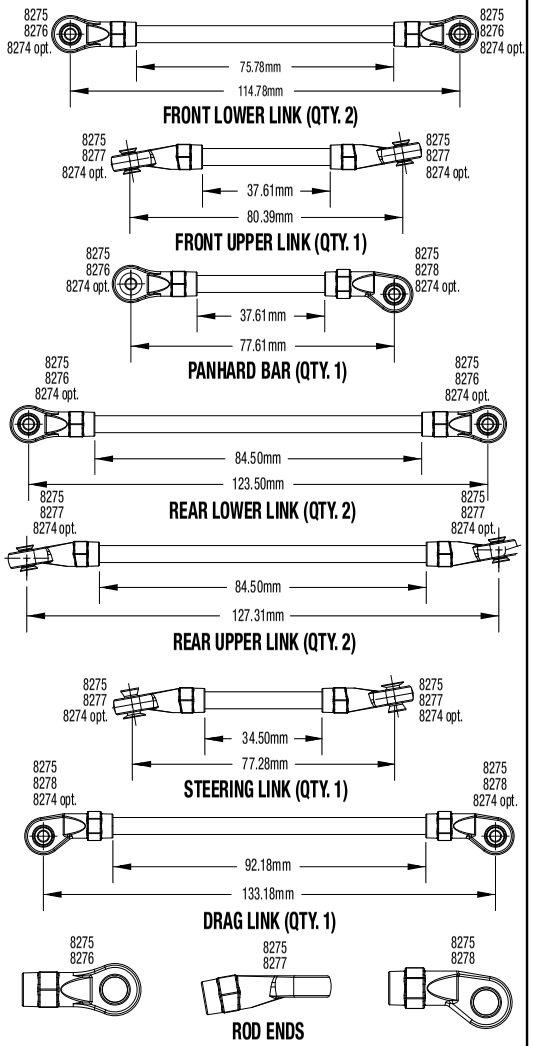

For standard hollow ball replacement, use part #5349.

Modular Assembly

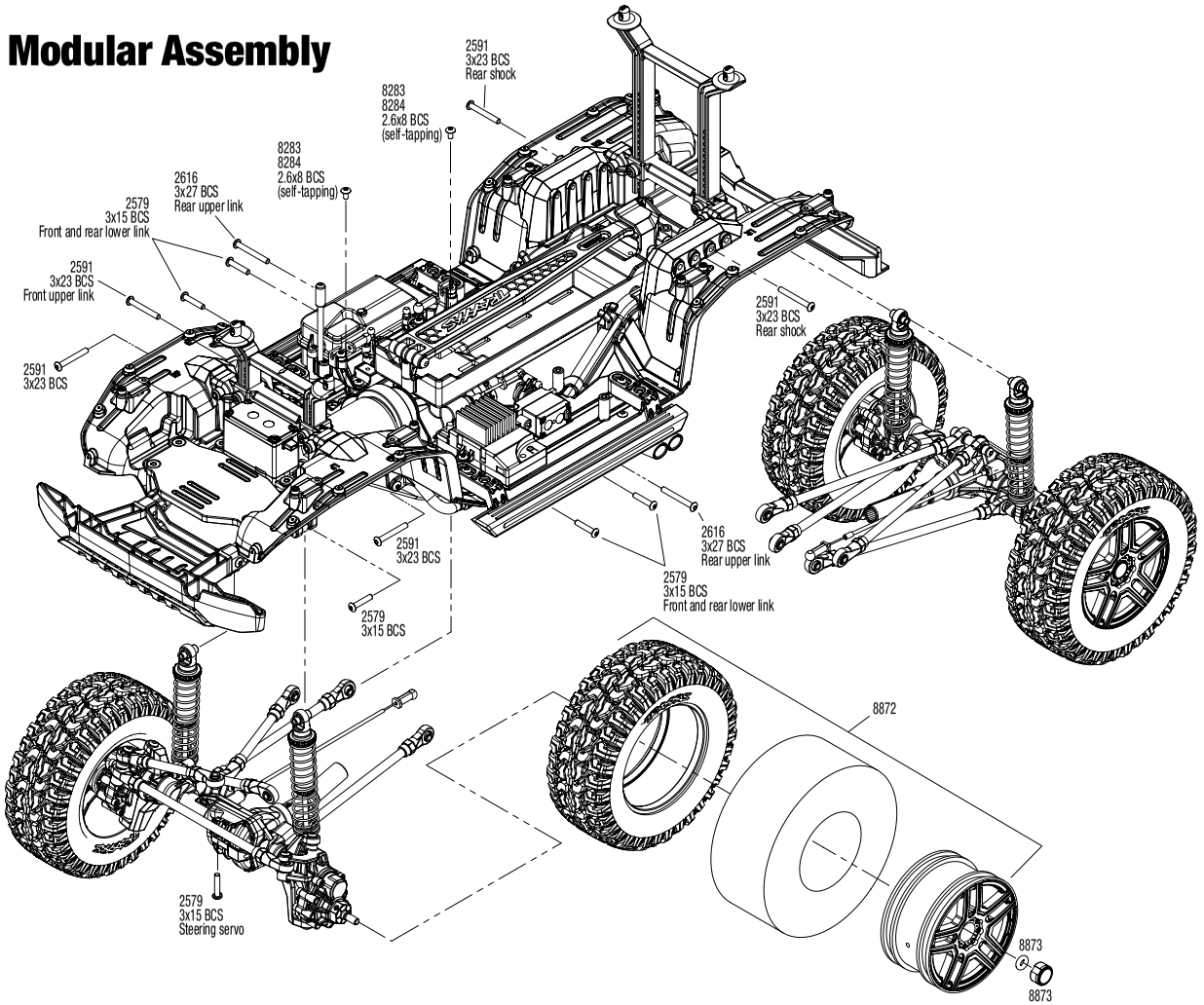

See Parts List for a complete listing of optional accessories.

REV 201020-R07

Specifications on this page are subject to change without notice. Every attempt has been made to ensure the accuracy of this drawing; however, Traxxas cannot be held responsible for typographical or other errors.

PARTS SHOWN IN BOLD ARE OPTIONAL ACCESSORIES.

Part categories and individual part listings are arranged alphabetically.

Axle Components

8241 Axle housing, front
8242 Axle housing, intermediate (TRX-6™) or rear (TRX-4®)
8227 Axle mount set (complete) (front & rear) (for suspension links)
8228 Axle shaft, front (left)/ drive pin/ cross pin
8229 Axle shaft, front (right)/ drive pin/ cross pin
8060 Axle shaft, front, heavy duty (left & right) (requires #8064 front portal drive input gear)
8062 Axle shaft, front, heavy duty (left & right)/ portal drive input gear (machined) (2) (assembled)
8230 Axle shaft, rear (left)
8231 Axle shaft, rear (right)
8061 Axle shaft, rear, heavy duty (left & right)/ portal drive input gear, rear (machined)
8063 Axle, rear, heavy duty (left & right) (requires #8065 rear portal drive input gear)
8233 Cross pin (2)/ drive pin (2) (to rebuild front axle shafts)
8256 Portal drive axle mount, rear (left & right)
8256X Portal drive axle mount, rear, 6061-T6 aluminum (blue-anodized) (left and right)/ 2.5x16 CS (4)
8256A Portal drive axle mount, rear, 6061-T6 aluminum (charcoal gray-anodized) (left and right)/ 2.5x16 CS (4)
8256G Portal drive axle mount, rear, 6061-T6 aluminum (green-anodized) (left and right)/ 2.5x16 CS (4)
8256R Portal drive axle mount, rear, 6061-T6 aluminum (red-anodized) (left and right)/ 2.5x16 CS (4)
8252 Portal drive housing, inner, front (left & right)/ 2.5x4 BCS (6)
8253 Portal drive housing, inner, rear (left or right) (2)
8251 Portal drive housing, outer (front or rear) (2)
8064 Portal drive input gear, front (machined) (left or right) (requires #8060 front axle shaft)
8257 Portal drive input gear, front/ drive pin/ cross pin
8259 Portal drive input gear, rear
8065 Portal drive input gear, rear (machined) (left or right) (requires #8063 rear axle)
8258 Portal drive output gear, front or rear
8252X Portal housings, inner (front), 6061-T6 aluminum (blue-anodized) (2)/ 3x12 BCS (2)
8252A Portal housings, inner (front), 6061-T6 aluminum (charcoal gray-anodized) (2)/ 3x12 BCS (2)
8252G Portal housings, inner (front), 6061-T6 aluminum (green-anodized) (2)/ 3x12 BCS (2)
8252R Portal housings, inner (front), 6061-T6 aluminum (red-anodized) (2)/ 3x12 BCS (2)
8253X Portal housings, inner (rear), 6061-T6 aluminum (blue-anodized) (2)/ 2.5x10 CS (2)
8253A Portal housings, inner (rear), 6061-T6 aluminum (charcoal gray-anodized) (2)/ 2.5x10 CS (2)
8253G Portal housings, inner (rear), 6061-T6 aluminum (green-anodized) (2)/ 2.5x10 CS (2)
8253R Portal housings, inner (rear), 6061-T6 aluminum (red-anodized) (2)/ 2.5x10 CS (2)
8251X Portal housings, outer, 6061-T6 aluminum (blue-anodized) (2)/ 2.5x10 CS (12)
8251A Portal housings, outer, 6061-T6 aluminum (charcoal gray-anodized) (2)/ 2.5x10 CS (12)
8251G Portal housings, outer, 6061-T6 aluminum (green-anodized) (2)/ 2.5x10 CS (12)
8251R Portal housings, outer, 6061-T6 aluminum (red-anodized) (2)/ 2.5x10 CS (12)
8255A Stub axle, extended (portal drive) (2)
8267 Weight, portal housing, brass (34 grams) (2)/ 2.5x8 CS (6) (requires #8251X, 8251R, 8251A, or 8251G outer portal housing)

Bearings & Bushings

5119A Ball bearings, black rubber sealed (10x15x4mm) (2)
5120A Ball bearings, black rubber sealed (12x18x4mm) (2)
5104A Ball bearings, black rubber sealed (4x10x4mm) (2)
5115A Ball bearings, black rubber sealed (5x10x4mm) (2)
5116A Ball bearings, black rubber sealed (5x11x4mm) (2)
5114A Ball bearings, black rubber sealed (5x8x2.5mm) (2)
5117A Ball bearings, black rubber sealed (6x12x4mm) (2)
5180A Ball bearings, black rubber sealed (6x13x5mm) (2)
5103A Ball bearings, black rubber sealed (7x14x5mm) (2)

Body (1969 Chevrolet Blazer)

9112 Body, Chevrolet Blazer (1969 - 1970) (clear, requires painting) (includes grille, side mirrors, door handles, windshield wipers, decals, window masks)
9112X Body, Chevrolet Blazer (1969), complete (black) (includes grill, side mirrors, door handles, windshield wipers, front & rear bumpers, decals)
9125 Bumper pads/ bumper guards (chrome)/ 2.5x10 BCS (4)/ 2.7mm drill bit (fits #9126 or #9127 front bumpers)
9127 Bumper, front (chrome)/ bumper mount/ 3x10 BCS (2)
9124 Bumper, rear (chrome)/ bumper mount/ 3x10 BCS (2)
9113 Decal sheets, Chevrolet Blazer (1969 -1972)
9115 Door handles, left, right, and rear/ retainers (3)/ windshield wipers, left & right/ retainer (1)/ fuel cap/ fuel flange/ fuel cap mount/ 1.6x5 BCS (self-tapping) (7)/ 2.6x8 BCS (1)
9123 Grille, Chevrolet Blazer (1969 - 1970)/ grille retainers (5)/ headlight housing (2)/ headlight lens (2)/ turn signal lens (2)/ hood emblem/ hood emblem mount/ 2.6x8 BCS (5)/ 2.5x6 BCS (4)/ 1.6x5 BCS (self-tapping) (2) (fits #9112 body)
9116 Marker light housing (4)/ marker light mount (4)/ marker light lens (red (2), amber (2))/ reverse lens (left & right)/ 1.6x5 BCS (self-tapping) (8)
9121 Mirrors, side, chrome (left & right)/ o-rings (4)/ body clips (4) (fits #9112 body)
9122 Tail light housing, black (2)/ lens (2)/ retainers (left & right)/ 2.6x8 BCS (self-tapping) (4)

Body (1972 Chevrolet Blazer)

9111 Body, Chevrolet Blazer (1972) (clear, requires painting) (includes grille, side mirrors, side trim, door handles, windshield wipers, decals, window masks)
9111X Body, Chevrolet Blazer (1972), complete (blue) (includes grille, side mirrors, door handles, windshield wipers, front & rear bumpers, decals)
9125 Bumper pads/ bumper guards (chrome)/ 2.5x10 BCS (4)/ 2.7mm drill bit (fits #9126 or #9127 front bumpers)
9126 Bumper, front (chrome)/ bumper mount/ lens (left and right) (2)/ lens mount (left and right) (2)/ 3x10 BCS (2)/ 2.6x6 BCS (4)
9124 Bumper, rear (chrome)/ bumper mount/ 3x10 BCS (2)
9113 Decal sheets, Chevrolet Blazer (1969 -1972)
9115 Door handles, left, right, and rear/ retainers (3)/ windshield wipers, left & right/ retainer (1)/ fuel cap/ fuel flange/ fuel cap mount/ 1.6x5 BCS (self-tapping) (7)/ 2.6x8 BCS (1)
9120 Grille, Chevrolet Blazer (1972)/ grille retainers (5)/ headlight housing (2)/ lens (2)/ 2.6x8 BCS (5)/ 2.5x6 BCS (4) (fits #9111 body)
9116 Marker light housing (4)/ marker light mount (4)/ marker light lens (red (2), amber (2))/ reverse lens (left & right)/ 1.6x5 BCS (self-tapping) (8)
9118 Mirrors, side, chrome (left & right)/ o-rings (4)/ body clips (4) (fits #9111 body)
9117 Side trim, Chevrolet Blazer (1972), left & right/ rear trim, upper & lower/ retainers, left, right & rear/ 2.6x8 BCS (23)/ 1.6x5 BCS (self-tapping) (5) (fits #9111 body)
9119 Tail light housing, chrome (2)/ lens (2)/ retainers (left & right)/ 2.6x8 BCS (self-tapping) (4)

Body (1979 Chevrolet Blazer)

8130 Body, Chevrolet Blazer (1979) (clear, requires painting)/ window masks
8130G Body, Chevrolet Blazer (1979) (orange) (requires grille, side mirrors, door handles, windshield wipers, decals)
8130A Body, Chevrolet Blazer (1979) (red) (requires grille, side mirrors, door handles, windshield wipers, decals)
8130X Body, Chevrolet Blazer (1979), complete (orange) (includes grille, side mirrors, door handles, windshield wipers, front & rear bumpers, decals)
8130R Body, Chevrolet Blazer (1979), complete (red) (includes grille, side mirrors, door handles, windshield wipers, front & rear bumpers, decals)
8131 Decal sheet, Chevrolet Blazer (1979)
8132 Door handles, left, right & rear tailgate/ windshield wipers, left & right/ retainers (2)/ 1.6x5 BCS (self-tapping) (7) (fits #8130 body)
8134 Grille, Chevrolet Blazer (1979)/ grille retainers (4)/ headlight housing (2)/ lens (2)/ 2.6x8 BCS (4)/ 2.5x6 BCS (2) (fits #8130 body)
8133X Mirrors, side (folding) (fits #8130 body)
8133 Mirrors, side, chrome (left & right)/ o-rings (4)/ body clips (4) (fits #8130 body)

G500 4X4 (82096-4)

8135 Tail lights, left & right (assembled)/ tail light retainers, left & right/ side marker lights (assembled) (2)/ side marker retainers (2)/ mounting tape (2)/ 1.6x5 BCS (self-tapping) (4)/ 2.6x8 BCS (2) (fits #8130 body)

Body (1979 Ford Bronco)

8010 Body, Ford Bronco (1979) (clear, requires painting)/ decals/ window masks/ tailgate panel insert/ adhesive foam tape (2)
8010X Body, Ford Bronco (1979), complete (black) (includes front and rear bumpers, push bar, rear body mount, grille, side mirrors, door handles, windshield wipers, spare tire mount, red and sunset decals) (requires #8072 inner fenders)
8078R Decal sheet, Bronco, red (fits #8010 body)
8075 Door handles, left & right/ windshield wipers, left & right/ retainers (3)/ 1.6x5 BCS (self-tapping) (4) (fits #8010 body)
8070 Grille, Ford Bronco/ grille retainers (6)/ headlight housing (2)/ lens (2)/ 2.6x8 BCS (6)/ 2.5x6 BCS (2) (fits #8010 body)
8073 Mirrors, side, black (left & right)/ retainers (2)/ body clips (4) (fits #8010 body)
8073X Mirrors, side, chrome (left & right)/ retainers (2)/ body clips (4) (fits #8010 body)
8076 Side trim, left & right (chrome)/ retainers/ LED lens/ 2.6x8 BCS (24) (fits #8010 body)
8074 Spare tire mount/ mounting bracket/ spare tire cover/ mounting hardware
8077 Tailgate panel insert (clear, requires painting)/ adhesive foam tape (2) (fits #8010 body)
8071 Tailgate panel/ tail light lens (2) (left & right) (fits #8010 body)

Body (Land Rover Defender)

8011 Body, Land Rover® Defender® (clear, trimmed, requires painting)/ window masks/ decal sheet
8011A Body, Land Rover® Defender®, adventure orange (complete with ExoCage, inner fenders, fuel canisters, and jack)
8011X Body, Land Rover® Defender®, graphite silver (painted)/ decals
8011R Body, Land Rover® Defender®, red (painted)/ decals
8012 Decals, Land Rover® Defender®
8016 ExoCage (complete with assembly hardware; #8015 roof basket sold separately) (fits #8011 body)
8019 Fender brace, inner, front & rear
8017 Fender flares, front & rear (2 each) (fits #8011 or #8211 body)
8018 Fenders, inner, front & rear (2 each)/ rock light covers (8)
8013 Grille, Land Rover® Defender®/ grille mount (3)/ headlight housing (2)/ lens (2)/ headlight mount (2) (fits #8011 body)
8020 Mirrors, side (left & right)/ snorkel/ mounting hardware (fits #8011 body)
8015 Roof basket (requires #8016 ExoCage) (fits #8011 body)
8021 Spare tire mount/ mounting bracket/ screw pins (2)
8014 Tail light housing (2)/ lens (2)/ decals (left & right) (fits #8011 body)

Body (Mercedes-Benz® G 500®)

8811 Body, Mercedes-Benz® G 500® 4x4² (clear, requires painting)/ decals/ window masks (includes rear body post, grille, side mirrors, door handles, & windshield wipers)
8811R Body, Mercedes-Benz® G 500® 4x4², complete (black) (includes rear body post, grille, side mirrors, door handles, & windshield wipers)
8811X Body, Mercedes-Benz® G 500® 4x4², complete (blue) (includes rear body post, grille, side mirrors, door handles, & windshield wipers)
8812 Decals, Mercedes-Benz® G 500® 4x4²
8813X Grille, Mercedes-Benz® G 500® 4x4²/ grille mount/ grille insert/ headlight lens (2)/ headlight reflector (2)/ reflector lens (2)/ bumperette front (2)/ bumperette mount (2)/ turn signal housing (2)/ turn signal housing retainer (2)/ turn signal len
8817 Mirrors, side, black (left & right)/ o-rings (4)/ windshield wipers, left, right, & rear/ wiper retainers (2)/ body clips (4)/ 1.6x5 BCS (self-tapping) (3)
8822 Roof visor/ visor retainer/ visor lens (2)/ 2.6x6 BCS (3)/ 3x4 GS (4)
8816X Side marker light housing (2)/ mount (2)/ lens (2)/ 1.6x7 BCS (self-tapping) (2)
8814X Tail light lens (2)/ tail light housing (2)/ tail light housing mount (2)/ reverse lens (2)/ 1.6x5 BCS (4) (left & right)

Body (Tactical Unit)

8211X Body, Tactical Unit, night camo (painted)/ decals
8019 Fender brace, inner, front & rear
8017 Fender flares, front & rear (2 each) (fits #8011 or #8211 body)
8018 Fenders, inner, front & rear (2 each)/ rock light covers (8)
8020 Mirrors, side (left & right)/ snorkel/ mounting hardware (fits #8011 body)
8021 Spare tire mount/ mounting bracket/ screw pins (2)

Body (TRX-4® Sport)

8112 Body with camper, TRX-4® Sport (clear, trimmed, requires painting)/ window masks/ decal sheet
8111R Body, TRX-4® Sport (clear, trimmed, die-cut for LED light kit, requires painting)/ window masks/ decal sheet
8111 Body, TRX-4® Sport (clear, trimmed, requires painting)/ window masks/ decal sheet
8113 Decal sheet, TRX-4® Sport
8120X Expedition rack, complete (includes traction boards, shovel, axe, jack, fire extinguisher, fuel cans, & mounting hardware) (fits #8111 or #8111R body)
8120 Expedition rack/ mounting hardware (fits #8111 or #8111R body)
8116 Grille/ grille retainers (2)/ grille mount/ lens (2)/ 2.5x8 BCS (6) (fits #8111 or #8112 body)
8119 Mirrors, side (left & right)/ snorkel/ mounting hardware (fits #8111 or #8112 body)
8122 Shovel/ axe/ accessory mount/ mounting hardware
8118 Spare tire mount/ mounting hardware
8117 Tailgate panel/ tailgate retainers (2)/ tailgate mount/ tail light lens (2) (left & right)/ 2.5x8 BCS (4) (fits #8111 or #8112 body)
8121X Traction boards, blue/ mounting hardware
8121G Traction boards, green/ mounting hardware
8121A Traction boards, yellow/ mounting hardware
8121 Traction boards/ mounting hardware

Body Accessories

1926 Antenna caps, vinyl (2)/ antenna spool
1726 Antenna, tube (1)/ vinyl antenna cap (1)/ wire retainer (1)
1834 Body clips (12) (standard size)
1834A Body clips, black (12) (standard size)
3934 Body clips, heavy duty (12)
3934A Body clips, heavy duty (black) (12)
8215 Body mounts & posts, front & rear (complete set)
8115 Body posts, front & rear
4915 Body washers, foam adhesive (10)
2514 Decal sheet, racing sponsors
8081 Fender extensions (4)/ 3x8 flat-head screws (24) (requires #8080 narrow inner fenders)
8080 Fenders, inner (narrow), front & rear (2 each)/ rock light covers (8)/ battery plate/ 3x8 flat-head screws (4)
8072 Fenders, inner, front & rear (2 each)/ rock light covers (8)/ battery plate/ 3x8 flat-head screws (4)
9950 Official Team Traxxas® racing decal set (flag logo/ 6-color)

Bumpers & Skidplates

8234 Bumper D-Rings, grey (front or rear)/ 2x12 CS (4)
8234R Bumper D-rings, red (front or rear)/ 2.0x12 CS (4)
8067 Bumper mounts, front & rear
8067X Bumper mounts, front & rear/ bumper mount, rear (offset)
8237 Bumper mounts, front & rear/ screw pins (4)
8124 Bumper, front (178mm wide)/ winch/ 2.6x8 BCS (1)
8137 Bumper, front (chrome)/ bumper mount/ 3x10 BCS (2)
8235 Bumper, front/ winch
8236 Bumper, rear
8125 Bumper, rear (176mm wide)
8136 Bumper, rear (chrome)/ bumper mount/ 3x8 BCS (2)
8820 Bumpers, front & rear
8821 Skid plate/ 3x10 CCS (4)
8238 Skidplate/ lower gear cover

Chassis & Attachments

8215 Body mounts & posts, front & rear (complete set)
8224 Box, receiver (sealed)/ wire cover/ foam pads/ silicone grease/ 3x8 BCS (5)/ 2.5x8 CS (2)
8058 Chassis conversion kit, TRX-4® (long to short wheelbase) (includes rear upper & lower suspension links, front & rear inner fenders, short female half shaft, battery tray, 3x8mm FCS (4))
8057 Chassis conversion kit, TRX-4® (short to long wheelbase) (includes rear upper & lower suspension links, front & rear shock towers, long female half shaft)
8220 Chassis rails, 448mm (steel) (left & right)
8818 Exhaust pipes (left & right)
8081 Fender extensions (4)/ 3x8 flat-head screws (24) (requires #8080 narrow inner fenders)
8080 Fenders, inner (narrow), front & rear (2 each)/ rock light covers (8)/ battery plate/ 3x8 flat-head screws (4)
8072 Fenders, inner, front & rear (2 each)/ rock light covers (8)/ battery plate/ 3x8 flat-head screws (4)
8218 Floor pans, left & right
8224X Receiver box cover (for use only with #8224 receiver box & #2260 BEC)/ foam pads/ seals/ silicone grease
8819 Rock sliders/ rock slider caps (left & right)
8225 Seal kit, receiver box (includes o-ring, seals, and silicone grease)
8240X Servo mount, 2-speed/ servo mount, T-Lock/ wire clips
8239 Servo mount, steering/ chassis crossmember

8216	Shock towers, front & rear (left & right)
8226	Tray, battery

Differential Components

8281	Carrier, differential/ differential slider/ T-Lock fork
8280A	**Differential cover, front or rear (black)**
8280X	Differential cover, front or rear (chrome-plated)
8280	**Differential cover, front or rear (grey)**
8280R	**Differential cover, front or rear (red)**
8195	Differential, locking, front and rear (assembled) (includes T-Lock cables and servo)
8282	Gear set, differential (output gears (2), spider gears (4), spider gear shaft (2))
8295	Output drive, transmission or differential (pin retainer (1)/ drive cup (1)/ drive ball (1)/ drive pin (1)/ 3x11 screw pin (1)/ cross pin (black) (1) 3x6 BCS with threadlock (1))
8279	Ring gear, differential/ pinion gear, differential
8279R	**Ring gear, differential/ pinion gear, differential (machined)**
8287	**Ring gear, differential/ pinion gear, differential (overdrive, machined)**
8288	**Ring gear, differential/ pinion gear, differential (underdrive, machined)**
8297	**Spool/ differential housing plug/ e-clip**

Driveline Components

8250	Half shafts, center (internal splined, front (2) & internal splined, rear (2)/ external splined (2)/ pin retainer (4)) (plastic parts only)
8255A	Stub axle, extended (portal drive) (2)
8269	Wheel hubs, 12mm hex (2)/ stub axle pins (2) (steel)
8269X	**Wheel hubs, 12mm hex, 6061-T6 aluminum (blue-anodized) (4)/ screw pin (4)**
8269A	**Wheel hubs, 12mm hex, 6061-T6 aluminum (charcoal gray-anodized) (4)/ screw pin (4)**
8269G	**Wheel hubs, 12mm hex, 6061-T6 aluminum (green-anodized) (4)/ screw pin (4)**
8269R	**Wheel hubs, 12mm hex, 6061-T6 aluminum (red-anodized) (4)/ screw pin (4)**

Hardware

1552	Backplate screws (3x8mm cap-head machine) (6)/washers (6)/ wrench
1834	**Body clips (12) (standard size)**
1834A	Body clips, black (12) (standard size)
3934	**Body clips, heavy duty (12)**
3934A	**Body clips, heavy duty (black) (12)**
8167X	**Hardware kit, stainless steel, beadlock rings (contains stainless steel hardware for 4 wheels)**
8298	**Hardware kit, stainless steel, TRX-4® (contains all stainless steel hardware used on TRX-4)**
8151	**Hardware kit, stainless steel, TRX-4® High Lift Kit (contains all stainless steel hardware used on TRX-4® Long Arm Lift Kit)**
5476X	**Hex wrenches; 1.5mm, 2mm, 2.5mm, 3mm, 2.5mm ball**
3647	**Nuts, 4mm flanged nylon locking (steel, serrated) (8)**
8347	Nuts, 4mm flanged nylon locking, serrated (black) (10)
1747R	**Nuts, aluminum, flanged, serrated (4mm) (blue-anodized) (4)**
1747G	**Nuts, aluminum, flanged, serrated (4mm) (green-anodized) (4)**
1747P	**Nuts, aluminum, flanged, serrated (4mm) (pink-anodized) (4)**
1985	PTFE-coated washers, 5x8x0.5mm (20) (use with ball bearings)
8221	Screw pin, 3x10mm (6)
3229	Screws, 2.5x10mm cap-head machine (hex drive) (6)
2523	Screws, 2.5x10mm countersunk machine (hex drive) (6)
3236	Screws, 2.5x12mm cap-head machine (6)
2618	Screws, 2.5x16mm cap-head machine (6)
3215	Screws, 2.5x6mm cap-head machine (hex drive) (6)
2617	Screws, 2.5x8mm button-head machine (hex drive) (6)
3965	Screws, 2.5x8mm cap-head machine (6)
2524	Screws, 2.5x8mm countersunk machine (hex drive) (6)
8299	Screws, 2.6x12mm button-head, self-tapping (hex drive) (6)
8167	Screws, 2x10mm cap-head, self-tapping (hex drive) (10)
2564	Screws, 2x8mm cap-head machine (hex drive) (6)
2577	Screws, 3x10mm button-head machine (hex drive) (6)
4859	Screws, 3x10mm flat-head machine (hex drive) (4)
2578	Screws, 3x12mm button-head machine (hex drive) (6)
2579	Screws, 3x15mm button-head machine (hex drive) (6)
2591	Screws, 3x23mm button-head machine (hex drive) (6)
2581	Screws, 3x25mm button-head machine (hex drive) (6)
2616	Screws, 3x27mm button-head machine (hex drive) (6)
2582	Screws, 3x30mm button-head machine (hex drive) (6)
2575	Screws, 3x6mm button-head machine (hex drive) (6)
3932	Screws, 3x6mm flat-head machine (hex drive) (6)
2576	Screws, 3x8mm button-head machine (hex drive) (6)
3931	Screws, 3x8mm flat-head machine (hex drive) (6)
3933	Screws, 4x16mm button-head machine (hex drive) (6)

LED Light Accessories

8031	**3-in-1 wire harness, LED light kit**
8089	**4-in-2 wire harness, LED light kit**
8028	**LED lights, power supply (regulated, 3V, 0.5-amp)/ 3-in-1 wire harness**
8026X	**LED rock light kit, TRX-4®/TRX-6™ (requires #8028 power supply and #8018, #8072, or #8080 inner fenders)**

LED Lights (1969-1972 Chevrolet Blazer)

8090	**LED light set, complete with power supply (contains headlights, tail lights, side marker lights, & distribution block) (fits #9111 or 9112 body)**

LED Lights (1979 Chevrolet Blazer)

8039	**LED light set (contains headlights, tail lights, side marker lights, distribution block (fits #8130 body, requires #8028 power supply)**
8038	**LED light set, complete with power supply (contains headlights, tail lights, side marker lights, distribution block, and power supply) (fits #8130 body)**

LED Lights (1979 Ford Bronco)

8036	**LED light set (contains headlights, tail lights, side marker lights, & distribution block) (fits #8010 body, requires #8028 power supply)**
8035	**LED light set, complete with power supply (contains headlights, tail lights, side marker lights, & distribution block) (fits #8010 body)**
8037	**LED lights, high/low switch (for #8035 or #8036 LED light kits)**

LED Lights (Land Rover Defender)

8027	**LED headlight/tail light kit (fits #8011 body, requires #8028 power supply)**
8025	**LED light bar (Rigid®), TRX-4 (requires #8028 power supply)**
8029	**LED light bar kit (Rigid®)/power supply, TRX-4®**
8030	**LED light set, complete (contains rock light kit, LED light bar (Rigid®), LED headlight/tail light kit, power supply, & 3-in-1 wire harness) (fits #8011 body)**

LED Lights (Mercedes-Benz® G 500® 4x4²)

8899	**LED light set (contains headlights, tail lights, roof lights, and distribution block) (fits #8811 or #8825 body, requires #8028 power supply)**
8898	**LED light set, complete with power supply (contains headlights, tail lights, roof lights, & distribution block) (fits #8811 or #8825 body)**

LED Lights (TRX-4® Sport)

8086	**LED expedition rack scene light kit (fits #8111 body, requires #8028 power supply)**
8084	**LED headlight/tail light kit (fits #8111 or #8112 body, requires #8028 power supply)**
8088	**LED light bar, front bumper (fits #8124 front bumper, requires #8028 power supply)**
8087	**LED light bar, roof lights (fits #8111 body, requires #8028 power supply)**
8085	**LED light set, complete with power supply (contains headlights, tail lights, & distribution block) (fits #8111 or #8112 body)**

Long Arm Lift Kit

8162X	**Body, GTS shock, long (aluminum, blue-anodized) (1) (for use with #8140X TRX-4® Long Arm Lift Kit)**
8162R	**Body, GTS shock, long (aluminum, red-anodized) (1) (for use with #8140R TRX-4® Long Arm Lift Kit)**
8162	**Body, GTS shock, long (silver aluminum) (1) (for use with #8140 TRX-4® Long Arm Lift Kit)**
8148	**Cable, T-lock (extra long) (for use with TRX-4® Long Arm Lift Kit)**
8147	**Cable, T-lock (medium) (for use with TRX-4® Long Arm Lift Kit)**
8150	**Driveshaft extension kit, center (includes internal splined, x-long (2), internal splined, long (1) and internal splined, medium (1)) (for use with TRX-4® Long Arm Lift Kit)**
8140	**Long Arm Lift Kit, TRX-4®, complete**
8140X	**Long Arm Lift Kit, TRX-4®, complete (includes blue powder coated links, blue-anodized shocks)**
8140R	**Long Arm Lift Kit, TRX-4®, complete (includes red powder coated links, red-anodized shocks)**
8149	**Rod ends, extended (standard (4), angled (4))/ hollow balls (8) (for use with TRX-4® Long Arm Lift Kit)**
8141	**Servo mount, steering (for use with TRX-4® Long Arm Lift Kit)**
8161	**Shock shaft, 3x57mm (GTS) (2) (includes bump stops) (for use with TRX-4® Long Arm Lift Kit)**
8160X	**Shocks, GTS, aluminum (blue-anodized) (assembled without springs) (4) (for use with #8140X TRX-4® Long Arm Lift Kit)**
8160R	**Shocks, GTS, aluminum (red-anodized) (assembled without springs) (4) (for use with #8140R TRX-4® Long Arm Lift Kit)**

G500 4X4 (82096-4)

8160 **Shocks, GTS, silver aluminum (assembled without springs) (4) (for use with #8140 TRX-4® Long Arm Lift Kit)**
8153 **Springs, shock, long (natural finish) (GTS) (0.29 rate, white stripe) (for use with TRX-4® Long Arm Lift Kit)**
8154 **Springs, shock, long (natural finish) (GTS) (0.39 rate, orange stripe) (for use with TRX-4® Long Arm Lift Kit)**
8155 **Springs, shock, long (natural finish) (GTS) (0.47 rate) (included with TRX-4® Long Arm Lift Kit)**
8156 **Springs, shock, long (natural finish) (GTS) (0.54 rate, green stripe) (for use with TRX-4® Long Arm Lift Kit)**
8157 **Springs, shock, long (natural finish) (GTS) (0.62 rate, blue stripe) (for use with TRX-4® Long Arm Lift Kit)**
8146X **Steering link, 5x117mm (1)/ draglink, 5x60mm (1)/ panhard link, 5x63mm (blue powder coated steel) (assembled with hollow balls) (for use with #8140X TRX-4® Long Arm Lift Kit)**
8146R **Steering link, 5x117mm (1)/ draglink, 5x60mm (1)/ panhard link, 5x63mm (red powder coated steel) (assembled with hollow balls) (for use with #8140R TRX-4® Long Arm Lift Kit)**
8144X **Suspension link, front upper, 5x68mm (1) (blue powder coated steel) (assembled with hollow balls) (for use with #8140X TRX-4® Long Arm Lift Kit)**
8144R **Suspension link, front upper, 5x68mm (1) (red powder coated steel) (assembled with hollow balls) (for use with #8140R TRX-4® Long Arm Lift Kit)**
8144 **Suspension link, front upper, 5x68mm (1) (steel) (assembled with hollow balls) (for use with #8140 TRX-4® Long Arm Lift Kit)**
8143 **Suspension links, front lower (2) (5x104mm, steel) (assembled with hollow balls) (for use with #8140 TRX-4® Long Arm Lift Kit)**
8143X **Suspension links, front lower, blue (2) (5x104mm, powder coated steel) (assembled with hollow balls) (for use with #8140X TRX-4® Long Arm Lift Kit)**
8143R **Suspension links, front lower, red (2) (5x104mm, powder coated steel) (assembled with hollow balls) (for use with #8140R TRX-4® Long Arm Lift Kit)**
8145 **Suspension links, rear lower (2) (5x115mm, steel) (assembled with hollow balls) (for use with #8140 TRX-4® Long Arm Lift Kit)**
8145X **Suspension links, rear lower, blue (2) (5x115mm, powder coated steel) (assembled with hollow balls) (for use with #8140X TRX-4® Long Arm Lift Kit)**
8145R **Suspension links, rear lower, red (2) (5x115mm, powder coated steel) (assembled with hollow balls) (for use with #8140R TRX-4® Long Arm Lift Kit)**
8142 **Suspension links, rear upper (2) (5x115mm, steel) (assembled with hollow balls) (for use with #8140 TRX-4® Long Arm Lift Kit)**
8142X **Suspension links, rear upper, blue (2) (5x115mm, powder coated steel) (assembled with hollow balls) (for use with #8140X TRX-4® Long Arm Lift Kit)**
8142R **Suspension links, rear upper, red (2) (5x115mm, powder coated steel) (assembled with hollow balls) (for use with #8140R TRX-4® Long Arm Lift Kit)**
8172 **Tires and wheels, assembled (Method 105 2.2" black chrome beadlock wheels, Canyon Trail 5.3x2.2" tires, foam inserts) (1 left, 1 right)**
8181 **Tires and wheels, assembled, glued (TRX-4® Sport 2.2" wheels, Canyon Trail 5.3x2.2" tires) (2)**
8170 **Tires, Canyon Trail 5.3x2.2"/ foam inserts (2)**
8171 **Wheels, Method 105 2.2" (black chrome, beadlock) (beadlock rings sold separately)**
8171A **Wheels, Method 105 2.2" (charcoal gray, beadlock) (beadlock rings sold separately)**
8180 **Wheels, TRX-4® Sport 2.2 (2)**

Motors & Electronics

1926 Antenna caps, vinyl (2)/ antenna spool
1726 Antenna, tube (1)/ vinyl antenna cap (1)/ wire retainer (1)
2262 **BEC, complete (includes receiver box cover and seals)**
2064 Gear set (for 2065 waterproof sub-micro servo)
2064X **Gear set, metal (for 2065X waterproof sub-micro servo)**
2072X Gear set, metal (for 2070, 2075 servos)
2252 **Gear set, metal (for 2250, 2255 servos)**
2072R **Gear set, metal, high speed (for 2070, 2075 servos)**
8290X **Motor mount plate, 6061-T6 aluminum (blue-anodized)**
8290A **Motor mount plate, 6061-T6 aluminum (charcoal gray-anodized)**
8290G **Motor mount plate, 6061-T6 aluminum (green-anodized)**
8290R **Motor mount plate, 6061-T6 aluminum (red-anodized)**
3975R Motor, Titan® 550, reverse rotation (21-turns/ 14 volts) (1)
8290 Plate, motor/ upper spur gear cover
2254 **Servo case, aluminum (blue-anodized) (middle) (for 2250 servo)**
2253 **Servo case, aluminum (red-anodized) (middle) (for 2255 servo)**
2251 **Servo case, plastic (top, middle, bottom)/ gaskets/ hardware (for 2250, 2255 servos)**
2063 Servo case/gaskets (for 2065 waterproof sub-micro servo)
2063X **Servo case/gaskets (for 2065X metal gear, waterproof, sub-micro servo)**
5669 Servo horn (with built-in spring and hardware) (for Summit locking differential)
2075R **Servo, digital high-speed, metal gear (ball bearing), waterproof**
2250 **Servo, digital high-torque 330 coreless, metal gear (ball bearing), waterproof (#2262 external BEC and #8247X metal servo horn recommended for optimal performance)**
2255 **Servo, digital high-torque 400 brushless, metal gear (ball bearing), waterproof (#2262 external BEC and #8247X metal servo horn recommended for optimal performance)**
2075X Servo, digital high-torque, metal gear (ball bearing), waterproof
2065 Servo, sub-micro, waterproof
2065X **Servo, sub-micro, waterproof, metal gear**
3025 XL-5HV 3s Electronic Speed Control, waterproof (low-voltage detection, fwd/rev/brake)
2261 **Y-harness, BEC**

Radio System, Batteries & Chargers

2849X **4000mAh 11.1v 3-Cell 25C LiPo Battery**
2872X **5000mAh 11.1v 3-Cell 25C LiPo Battery**
2842X **5000mAh 7.4v 2-Cell 25C LiPo Battery**
2843X **5800mAh 7.4v 2-Cell 25C LiPo Battery**
2869X **7600mAh 7.4v 2-Cell 25C LiPo Battery**
2976 **AC to DC converter, 40W**
2938X **Adapter, Traxxas® iD® LiPo battery (adapts Traxxas iD batteries to separate balance ports)**
1726 Antenna, tube (1)/ vinyl antenna cap (1)/ wire retainer (1)
2943 **Battery charge indicators (green (4), blue (4), grey (4))**
6548 Battery door, transmitter (replacement for #6516, 6517, 6528, 6529, 6530 transmitters)
8222 **Battery strap (for 2200 2-cell and 1400 3-cell LiPo batteries)**
2914 **Battery, Power Cell AA Alkaline (4)**
2923X **Battery, Power Cell, 3000mAh (NiMH, 7-C flat, 8.4V)**
2940X **Battery, Series 3 Power Cell, 3300mAh (NiMH, 7-C flat, 8.4V)**
2950X **Battery, Series 4 Power Cell, 4200mAh (NiMH, 7-C flat, 8.4V)**
2960X **Battery, Series 5 Power Cell, 5000mAh (NiMH, 7-C flat, 8.4V)**
2983 **Battery/charger completer pack (includes #2969 2-amp NiMH peak detecting AC charger (1), #2923X 3000mAh 8.4V 7-cell NiMH battery (1))**
2992 **Battery/charger completer pack (includes #2970 iD® charger (1), #2843X 5800mAh 7.4V 2-cell 25C LiPo battery (1))**
2994 **Battery/charger completer pack (includes #2970 iD® charger (1), #2849X 4000mAh 11.1v 3-Cell 25C LiPo Battery (1))**
2991 **Battery/charger completer pack (includes #2972 Dual iD® charger (1), #2869X 7600mAh 7.4V 2-cell 25C LiPo battery (2))**
2262 **BEC, complete (includes receiver box cover and seals)**
2975 **Charger, DC, 4 amp (6 - 7 cell, 7.2 - 8.4 volt, NiMH)**
2972 **Charger, EZ-Peak® Dual, 100W, NiMH/LiPo with iD® Auto Battery Identification**
2973 **Charger, EZ-Peak® Live Dual, 200W, NiMH/LiPo with iD® Auto Battery Identification**
2971 **Charger, EZ-Peak® Live, 100W, NiMH/LiPo with iD® Auto Battery Identification**
2970 **Charger, EZ-Peak® Plus, 4 amp, NiMH/LiPo with iD® Auto Battery Identification**
6525 **Communication link, telemetry expander**
6541 **Connector, power tap (with cable) (long)/ wire tie**
6512 Cover plate, Traxxas Link™ Wireless Module
2978 **Fuse, charger, 5A (2) (for #2974, 2975, 2977)**
2064 Gear set (for 2065 waterproof sub-micro servo)
2064X **Gear set, metal (for 2065X waterproof sub-micro servo)**
2072X Gear set, metal (for 2070, 2075 servos)
2252 **Gear set, metal (for 2250, 2255 servos)**
2072R **Gear set, metal, high speed (for 2070, 2075 servos)**
2968X **LiPo cell voltage checker/balancer (includes #2938X adapter for Traxxas® iD® batteries)**
2968 **LiPo cell voltage checker/balancer (requires #2938X adapter for Traxxas® iD® batteries)**
6561 **Mount, telemetry expander**
6535 **Mount, temperature sensor (electric motors)/ wire tie/ thermal pad**
6533 Receiver, micro, TQi 2.4GHz with telemetry & TSM (5-channel)
6552 **Seal kit, expander box (includes o-ring, seals, and silicone grease)**
6526 **Sensor, auto-detectable, temperature**
6527 **Sensor, auto-detectable, voltage**
6521 **Sensor, temperature and voltage (long)**
2254 **Servo case, aluminum (blue-anodized) (middle) (for 2250 servo)**
2253 **Servo case, aluminum (red-anodized) (middle) (for 2255 servo)**
2251 **Servo case, plastic (top, middle, bottom)/ gaskets/ hardware (for 2250, 2255 servos)**
2063 Servo case/gaskets (for 2065 waterproof sub-micro servo)
2063X **Servo case/gaskets (for 2065X metal gear, waterproof, sub-micro servo)**

2075R	**Servo, digital high-speed, metal gear (ball bearing), waterproof**
2250	**Servo, digital high-torque 330 coreless, metal gear (ball bearing), waterproof (#2262 external BEC and #8247X metal servo horn recommended for optimal performance)**
2255	**Servo, digital high-torque 400 brushless, metal gear (ball bearing), waterproof (#2262 external BEC and #8247 steel servo horn recommended for optimal performance)**
2075X	Servo, digital high-torque, metal gear (ball bearing), waterproof
2065	Servo, sub-micro, waterproof
2065X	**Servo, sub-micro, waterproof, metal gear**
6553X	**Telemetry expander 2.0 and GPS module 2.0, TQi radio system**
6550X	**Telemetry expander 2.0, TQi radio system (for use only with #6551X GPS module)**
6551X	**Telemetry GPS module 2.0, TQi radio system (for use only with #6550X telemetry expander)**
6509R	**TQi 2.4 GHz High Output radio system, 2-channel, Traxxas Link™ enabled, TSM (2-ch transmitter, 5-ch micro receiver)**
6507R	**TQi 2.4 GHz High Output radio system, 4-channel with Traxxas Link™ Wireless Module, TSM (4-ch transmitter, 5-ch micro receiver)**
6530	Transmitter, TQi Traxxas Link™ enabled, 2.4GHz high output, 4-channel (transmitter only)
6511	**Traxxas Link™ Wireless Module**
2261	**Y-harness, BEC**

Ready-To-Race Model

82096-4	TRX-4® Scale and Trail™ Crawler with Mercedes-Benz® G 500® 4x4² Body: 1/10 Scale 4WD Electric Trail Truck. Ready-to-Drive® with TQi Traxxas Link™ Enabled 2.4GHz Radio System, XL-5 HV ESC (fwd/rev), and Titan® 550 motor.

Scale Details

8120X	**Expedition rack, complete (includes traction boards, shovel, axe, jack, fire extinguisher, fuel cans, & mounting hardware) (fits #8111 or #8111R body)**
8022T	**Fuel canisters (black) (2)/ 3x8 FCS (1)**
8022R	**Fuel canisters (blue) (2)/ 3x8 FCS (1)**
8022	**Fuel canisters (red) (2)/ 3x8 FCS (1)**
8022X	**Fuel canisters (white) (2)/ 3x8 FCS (1)**
8022A	**Fuel canisters (yellow) (2)/ 3x8 FCS (1)**
8023T	**Jack (black) (1)/ 2x8 BCS (1)**
8023	**Jack (red) (1)/ 2x8 BCS (1)**
8122	**Shovel/ axe/ accessory mount/ mounting hardware**
8121X	**Traction boards, blue/ mounting hardware**
8121G	**Traction boards, green/ mounting hardware**
8121A	**Traction boards, yellow/ mounting hardware**
8121	**Traction boards/ mounting hardware**

Shocks (GTS)

8266	Body, GTS shock (aluminum, silver-anodized) (1)
8266X	**Body, GTS shock (hard-anodized, PTFE-coated aluminum) (1)**
8266A	**Body, GTS shock, aluminum (blue-anodized) (1)**
8266G	**Body, GTS shock, aluminum (green-anodized) (1)**
8266R	**Body, GTS shock, aluminum (red-anodized) (1)**
8264	Caps & spring retainers, GTS shocks (upper cap (2)/ hollow balls (4)/ bottom cap (2)/ upper retainer (2)/ lower retainer (2))
8274	**Hollow ball set, complete, TRX-4® (aluminum, PTFE-coated)**
5475	Multi-tool (plastic)
8261	**Piston, damper (red) (4)/ e-clips (8)**
8262	Rebuild kit, GTS shocks (x-rings, o-rings, pistons, bushings, e-clips, and rod ends)
8263	Shock shaft, 3x47mm (GTS) (2)
8263T	**Shock shaft, 3x47mm (GTS) (titanium nitride-coated) (2)**
8260X	**Shocks, GTS hard-anodized, PTFE-coated aluminum bodies with TiN shafts (assembled with spring retainers) (2)**
8260A	**Shocks, GTS, aluminum (blue-anodized) (assembled with spring retainers) (2)**
8260G	**Shocks, GTS, aluminum (green-anodized) (assembled with spring retainers) (2)**
8260R	**Shocks, GTS, aluminum (red-anodized) (assembled with spring retainers) (2)**
8260	Shocks, GTS, silver aluminum (assembled with spring retainers) (2)
1666	Silicone shock oil (30 wt)

Slipper Clutch Components

8292	Input shaft/ output shaft (transmission)
8286	Output shafts (transfer case), front & rear
8254	Rebuild kit, slipper clutch (steel disc (2)/ friction insert (2)/ 4.0mm NL (1)/ spring washers (4), metal washer (1))
8249	**Slipper eliminator plate**

Springs

8042	**Springs, shock (natural finish) (GTS) (0.22 rate, yellow stripe) (2)**
8043	**Springs, shock (natural finish) (GTS) (0.30 rate, white stripe) (2)**
8044	**Springs, shock (natural finish) (GTS) (0.39 rate, orange stripe) (2)**
8041	Springs, shock (natural finish) (GTS) (0.45 rate) (2)
8040	**Springs, shock (natural finish) (GTS) (0.54 rate, green stripe) (2)**
8045	**Springs, shock (natural finish) (GTS) (0.61 rate, blue stripe) (2)**

Spur Gears & Pinion Gears

6746	**Gear, 10-T pinion (32-p) (steel)/ set screw**
6747	Gear, 11-T pinion (32-p) (steel)/ set screw
3942X	**Gear, 12-T pinion (32-p), heavy duty (machined, hardened steel)/ set screw**
3943X	**Gear, 13-T pinion (32-p), heavy duty (machined, hardened steel)/ set screw**
3944X	**Gear, 14-T pinion (32-p), heavy duty (machined, hardened steel)/ set screw**
3945X	**Gear, 15-T pinion (32-p), heavy duty (machined, hardened steel)/ set screw**
3946X	**Gear, 16-T pinion (32-p), heavy duty (machined, hardened steel)/ set screw**
3947X	**Gear, 17-T pinion (32-p), heavy duty (machined, hardened steel)/ set screw**
3948X	**Gear, 18-T pinion (32-p), heavy duty (machined, hardened steel)/ set screw**
3949X	**Gear, 19-T pinion (32-p), heavy duty (machined, hardened steel)/ set screw**
3950X	**Gear, 20-T pinion (32-p), heavy duty (machined, hardened steel)/ set screw**
3951X	**Gear, 21-T pinion (32-p), heavy duty (machined, hardened steel)/ set screw**
3952X	**Gear, 22-T pinion (32-p), heavy duty (machined, hardened steel)/ set screw**
6745	**Gear, 9-T pinion (32-p) (steel)/ set screw**
8052	Spur gear, 39-tooth (32-pitch)
8053	**Spur gear, 45-tooth (32-pitch)**

Steering Components

8232	Caster blocks (portal drive), left & right/ kingpin bushings (4)
8232X	**Caster blocks, 6061-T6 aluminum (blue-anodized), left and right**
8232A	**Caster blocks, 6061-T6 aluminum (charcoal gray-anodized), left and right**
8232G	**Caster blocks, 6061-T6 aluminum (green-anodized), left and right**
8232R	**Caster blocks, 6061-T6 aluminum (red-anodized), left and right**
2072X	Gear set, metal (for 2070, 2075 servos)
2072R	**Gear set, metal, high speed (for 2070, 2075 servos)**
8274	**Hollow ball set, complete, TRX-4® (aluminum, PTFE-coated)**
5355	Hollow ball, tall centered (2)/ tall offset hollow ball (2)/ bump steer adjustment shims; 3.5mm (2), 1.17mm (2)
8275	Rod end set, complete (standard (10), angled 10-degrees (8), offset (4))
8276	Rod ends (10)
8277	Rod ends, angled 10-degrees (8)
2742	Rod ends, long (6)/ hollow ball connectors (6)
8278	Rod ends, offset (4)
8247X	Servo horn, steering, metal/ 3x14 BCS (1)
2075R	**Servo, digital high-speed, metal gear (ball bearing), waterproof**
2075X	Servo, digital high-torque, metal gear (ball bearing), waterproof
5529	Shim set, 3x7x1mm (2), 3x6x0.5mm (4), 3x7x2mm (2)/ hollow balls, captured (4)
8246	Steering link, 5x60mm (1)/ draglink, 5x117mm (1) (steel)
8243	Suspension link, front, 5x100mm (lower) (steel) (2)
8244	Suspension link, front, 5x63mm (upper) (steel) (2)
8245	**Suspension link, rear, 5x121mm (upper or lower) (steel) (2)**

Suspension Linkage

8058	**Chassis conversion kit, TRX-4® (long to short wheelbase) (includes rear upper & lower suspension links, front & rear inner fenders, short female half shaft, battery tray, 3x8mm FCS (4))**
8057	**Chassis conversion kit, TRX-4® (short to long wheelbase) (includes rear upper & lower suspension links, front & rear shock towers, long female half shaft)**
8274	**Hollow ball set, complete, TRX-4® (aluminum, PTFE-coated)**
5355	Hollow ball, tall centered (2)/ tall offset hollow ball (2)/ bump steer adjustment shims; 3.5mm (2), 1.17mm (2)
8275	Rod end set, complete (standard (10), angled 10-degrees (8), offset (4))
8276	Rod ends (10)
8277	Rod ends, angled 10-degrees (8)
2742	Rod ends, long (6)/ hollow ball connectors (6)

G500 4X4 (82096-4)

8278	Rod ends, offset (4)
5529	Shim set, 3x7x1mm (2), 3x6x0.5mm (4), 3x7x2mm (2)/ hollow balls, captured (4)
8243	Suspension link, front, 5x100mm (lower) (steel) (2)
8244	Suspension link, front, 5x63mm (upper) (steel) (2)
8248	Suspension link, rear, 5x109mm (upper or lower) (steel) (2)
8245	**Suspension link, rear, 5x121mm (upper or lower) (steel) (2)**

Team Traxxas Items

2514	**Decal sheet, racing sponsors**
6160X	**DVD, Maxx® Power! Full Throttle Action (sleeve)**
9950	**Official Team Traxxas® racing decal set (flag logo/ 6-color)**
9909	**Traxxas® racing banner, red & black (3x7 feet)**

Tires & Wheels

8169T	**Beadlock rings, black (1.9") (aluminum) (4)/ 2x10 CS (48)**
8168T	**Beadlock rings, black (2.2") (aluminum) (4)/ 2x10 CS (48)**
8169X	**Beadlock rings, blue (1.9") (aluminum) (4)/ 2x10 CS (48)**
8168X	**Beadlock rings, blue (2.2") (aluminum) (4)/ 2x10 CS (48)**
8169G	**Beadlock rings, green (1.9") (aluminum) (4)/ 2x10 CS (48)**
8168G	**Beadlock rings, green (2.2") (aluminum) (4)/ 2x10 CS (48)**
8169A	**Beadlock rings, orange (1.9") (aluminum) (4)/ 2x10 CS (48)**
8168A	**Beadlock rings, orange (2.2") (aluminum) (4)/ 2x10 CS (48)**
8169R	**Beadlock rings, red (1.9") (aluminum) (4)/ 2x10 CS (48)**
8168R	**Beadlock rings, red (2.2") (aluminum) (4)/ 2x10 CS (48)**
8169	**Beadlock rings, satin (1.9") (aluminum) (4)/ 2x10 CS (48)**
8168	**Beadlock rings, satin (2.2") (aluminum) (4)/ 2x10 CS (48)**
8873	Center caps, Mercedes-Benz® G 500® 4x4² wheel (black) (4) (requires #8255A extended stub axle)
8164	**Center caps, wheel (chrome) (4)/ decal sheet (requires #8255A extended stub axle)**
8176	**Center caps, wheel (chrome) (4)/ decal sheet (requires #8255A extended stub axle)**
8174	**Tires and wheels, assembled (Method 105 1.9" black chrome beadlock wheels, Canyon Trail 4.6x1.9" tires, foam inserts) (1 left, 1 right)**
8172	**Tires and wheels, assembled (Method 105 2.2" black chrome beadlock wheels, Canyon Trail 5.3x2.2" tires, foam inserts) (1 left, 1 right) (for use with TRX-4 Long Arm Lift Kit)**
8166X	**Tires and wheels, assembled, glued (1.9" chrome wheels, Canyon Trail 4.6x1.9" tires) (4)/ center caps (4)/ decal sheet (requires #8255A extended stub axle)**
8166	**Tires and wheels, assembled, glued (1.9" chrome wheels, Canyon Trail 4.6x1.9" tires) (2)/ center caps (2)/ decal sheet (requires #8255A extended stub axle)**
8177	**Tires and wheels, assembled, glued (1.9" chrome wheels, Canyon Trail 4.6x1.9" tires) (2)/ center caps (2)/ decal sheet (requires #8255A extended stub axle)**
8183X	**Tires and wheels, assembled, glued (1.9" classic chrome wheels, Canyon Trail 4.6x1.9" tires) (4)/ center caps (4) (requires #8255A extended stub axle)**
8872	Tires and wheels, assembled, glued (2.6" black, satin chrome-plated Mercedes-Benz® G 500® 4x4² wheels, 4.6x2.6" tires) (2)/ center caps (2) (requires #8255A extended stub axle)
8273	**Tires and wheels, assembled, glued (Tactical 1.9" wheels, Canyon Trail 4.6x1.9" tires) (2)**
8272X	**Tires and wheels, assembled, glued (TRX-4® 1.9" satin beadlock wheels, Canyon Trail 4.6x1.9" tires) (2)**
8272	**Tires and wheels, assembled, glued (TRX-4® 1.9" wheels, Canyon Trail 4.6x1.9" tires) (2)**
8179	**Tires and wheels, assembled, glued (TRX-4® Sport 1.9" wheels, Canyon Trail 4.6x1.9" tires) (2)**
8181	**Tires and wheels, assembled, glued (TRX-4® Sport 2.2" wheels, Canyon Trail 5.3x2.2" tires) (2) (for use with TRX-4 Long Arm Lift Kit)**
8270	**Tires, Canyon Trail 4.6x1.9" (S1 compound)/ foam inserts (2)**
8170	**Tires, Canyon Trail 5.3x2.2"/ foam inserts (2) (for use with TRX-4 Long-Arm Lift Kit)**
8269	Wheel hubs, 12mm hex (2)/ stub axle pins (2) (steel)
8269X	**Wheel hubs, 12mm hex, 6061-T6 aluminum (blue-anodized) (4)/ screw pin (4)**
8269A	**Wheel hubs, 12mm hex, 6061-T6 aluminum (charcoal gray-anodized) (4)/ screw pin (4)**
8269G	**Wheel hubs, 12mm hex, 6061-T6 aluminum (green-anodized) (4)/ screw pin (4)**
8269R	**Wheel hubs, 12mm hex, 6061-T6 aluminum (red-anodized) (4)/ screw pin (4)**
8165	**Wheels, 1.9", chrome (2)/ center caps (2)/ decal sheet (requires #8255A extended stub axle)**
8175	**Wheels, 1.9", chrome (2)/ center caps (2)/ decal sheet (requires #8255A extended stub axle)**
8173	**Wheels, Method 105 1.9" (black chrome, beadlock) (beadlock rings sold separately)**
8173A	**Wheels, Method 105 1.9" (charcoal gray, beadlock) (beadlock rings sold separately)**
8171	**Wheels, Method 105 2.2" (black chrome, beadlock) (beadlock rings sold separately) (for use with TRX-4 Long Arm Lift Kit)**
8171A	**Wheels, Method 105 2.2" (charcoal gray, beadlock) (beadlock rings sold separately) (for use with TRX-4 Long Arm Lift Kit)**
8268	**Wheels, Tactical 1.9 (2)**
8271	**Wheels, TRX-4® 1.9 (2)**
8271X	**Wheels, TRX-4® 1.9 (satin beadlock) (2)**
8178	**Wheels, TRX-4® Sport 1.9 (2)**
8180	**Wheels, TRX-4 Sport 2.2 (2) (for use with TRX-4 Long Arm Lift Kit)**

Transmission Components

8283	Cable, T-lock (front)
8284	Cable, T-lock (rear)
8195	Differential, locking, front and rear (assembled) (includes T-Lock cables and servo)
8289	Drive hub, 2-speed/ shift dog/ shift fork/ 2-speed linkage
8293X	Gear set, transmission, metal (includes 18T, 30T input gears, 36T output gear, 2x9.8 pins (5))
8291	Gearbox housing (includes main housing, front housing, & cover)
8285	Gears, transfer case (3)
5041	Grease, premium high performance (20cc)
8292	Input shaft/ output shaft (transmission)
8290X	**Motor mount plate, 6061-T6 aluminum (blue-anodized)**
8290A	**Motor mount plate, 6061-T6 aluminum (charcoal gray-anodized)**
8290G	**Motor mount plate, 6061-T6 aluminum (green-anodized)**
8290R	**Motor mount plate, 6061-T6 aluminum (red-anodized)**
8295	Output drive, transmission or differential (pin retainer (1)/ drive cup (1)/ drive ball (1)/ drive pin (1)/ 3x11 screw pin (1)/ cross pin (black) (1) 3x6 BCS with threadlock (1))
8294	Output gear, high range, 24T (metal)
8286	Output shafts (transfer case), front & rear
8290	Plate, motor/ upper spur gear cover
8249	**Slipper eliminator plate**
8296	**Transmission gears, single speed, metal**
8196	Two speed conversion kit

Traxxas Tools

3433X	**Body reamer (aluminum handle)**
3433	**Body reamer (plastic handle)**
3436	**Cap, body reamer**
3432	**Scissors, curved tip**
3431	**Scissors, straight tip**
8712	**Speed Bit Essentials Set, hex and nut driver, 7-piece, includes premium handle (medium), travel pouch, hex drivers (straight: 1.5mm, 2.0mm, 2.5mm) and nut drivers (5.0mm, 5.5mm, 7.0mm, and 8.0mm), 1/4" drive**
8721	**Speed bit handle, medium (one piece)**
8720	**Speed bit handle, premium, large (rubber overmold)**
8722	**Speed bit handle, premium, medium (rubber overmold)**
8710	**Speed Bit Master Set, hex and nut driver, 13-piece, includes premium handle (medium), travel pouch, hex drivers (straight: 1.5mm, 2.0mm, 2.5mm, 3.0mm), (ball-end: 2.0mm, 2.5mm, 3.0mm), and nut drivers (4.00mm, 4.50mm, 5.00mm, 5.50mm, 7.00mm, 8.00mm),**
8711	**Speed Bit Master Set, hex driver, 7-piece straight and ball end, includes premium handle (medium), travel pouch, hex drivers (straight: 1.5mm, 2.0mm, 2.5mm, 3.0mm) (ball end: 2.0mm, 2.5mm, 3.0mm), 1/4" drive**
8719	**Speed Bit Master Set, nut driver, 6-piece, includes premium handle (medium), travel pouch, and nut drivers (4.0mm, 4.5mm, 5.0mm, 5.5mm, 7.0mm, 8.0mm), 1/4" drive**
8716	**Speed Bit Set, hex driver, 2-piece ball-end (2.0mm, 2.5mm), 1/4" drive**
8716X	**Speed Bit Set, hex driver, 3-piece ball-end (2.0mm, 2.5mm, 3.0mm), 1/4" drive**
8715	**Speed Bit Set, hex driver, 3-piece straight (1.5mm, 2.0mm, 2.5mm), 1/4" drive**
8715X	**Speed Bit Set, hex driver, 4-piece straight (1.5mm, 2.0mm, 2.5mm, 3.0mm), 1/4" drive**
3415	**Tool set with pouch (includes 1.5mm, 2.0mm, 2.5mm, 3.0mm, 3.5mm, 4mm drivers/ 4mm, 5mm, 5.5mm, 7mm and 8mm nut drivers/ 2mm, 4mm, and 5mm slotted screwdrivers/ #00 Phillips, #0 Phillips, and #1 Phillips screwdrivers/ 4mm and 8mm wrench/ driver handle**

REV. 201020 0904

TRX-4® Traxx™

8889	Bearing retainers, inner (2), outer (2)
8890	Drive wheel (1)
8885	Shock mounts (frame, left (2), frame, right (2))/ portal mounts (1 each, front (left & right), rear (left & right))
8888	Spring (4)
8887	Stub axle (1)
8886	Stub axle nut (4)
8891	Tension wheels (6)/ road wheels (4)
8881	Traxx™, front, left (assembled) (requires #8886 stub axle, #7061 GTR shock, & #8878 or #8895 rubber track)
8882	Traxx™, front, right (assembled) (requires #8886 stub axle, #7061 GTR shock, & #8878 or #8895 rubber track)
8883	Traxx™, rear, left (assembled) (requires #8886 stub axle, #7061 GTR shock, & #8879 or #8896 rubber track)
8884	Traxx™, rear, right (assembled) (requires #8886 stub axle, #7061 GTR shock, & #8879 or #8896 rubber track)
8880	Traxx™, TRX-4® (4) (complete set, front & rear)
8895	Treads, All-Terrain, TRX-4® Traxx™ (front, left or right) (rubber) (1)
8896	Treads, All-Terrain, TRX-4® Traxx™ (rear, left or right) (rubber) (1)

If you have questions or need technical assistance, call Traxxas at:

1-888-TRAXXAS

(1-888-872-9927) (U.S. residents only)

For orders, calls outside the U.S., and other information, call 972-549-3000, or fax to 972-549-3011 e-mail Traxxas at support@Traxxas.com

TRAXXAS.com

Mercedes-Benz G 63 AMG 6×6

TRX-6™

MODEL 88096-4

6X6 ELECTRIC
SCALE & TRAIL CRAWLER



TQi 2.4GHz TRANSMITTER

TITAN 21T 550 MOTOR AND XL-5 HV ELECTRONIC SPEED CONTROL

GTS ALUMINUM SHOCKS

"Mercedes-Benz", , and the design of the enclosed product are subject to intellectual property protection owned by Daimler AG. They are used by Traxxas LP under license.

TAKE THE PATH LESS TRAVELED

The Mercedes-Benz G 63 AMG 6x6 represents a singular vision to create the boldest and toughest all-terrain vehicle ever. Traxxas captures the spirit and no-compromise approach of the Mercedes-Benz G 63 AMG 6x6 with an officially licensed detailed scale replica built on the new TRX-6™ platform. Six drive wheels, three T-Lock™ remote-locking differentials, portal axles, high/low transmission, 6 aluminum long-travel shocks, and a stunningly accurate body with brilliant LED lighting make this the most advanced and capable RC crawler ever to hit the trail.

TRX6

Front Assembly

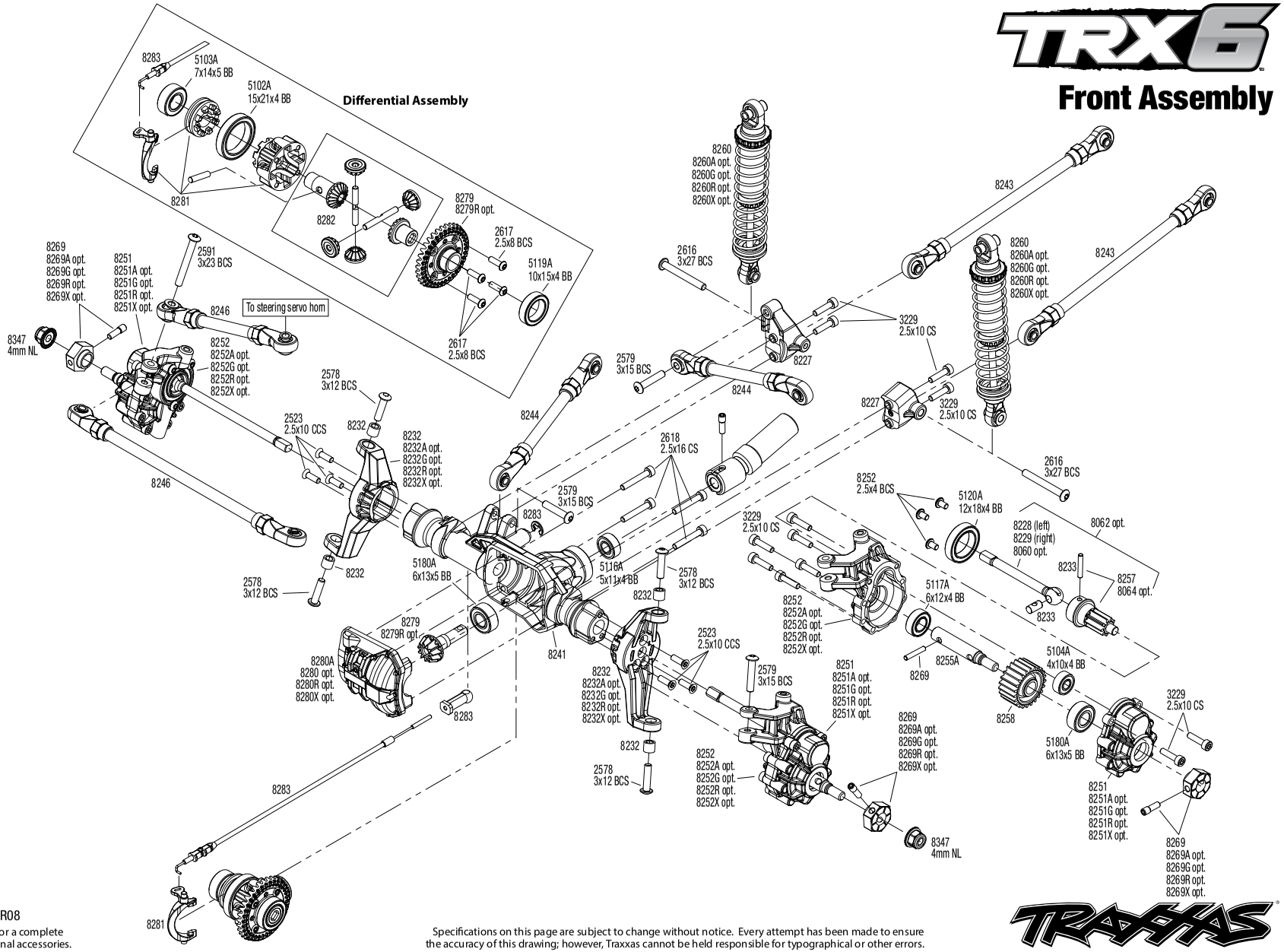

REV 201020-R08

See Parts List for a complete listing of optional accessories.

Specifications on this page are subject to change without notice. Every attempt has been made to ensure the accuracy of this drawing; however, Traxxas cannot be held responsible for typographical or other errors.

TRX-6 G 63 (88096-4)

TRAXXAS

TRX6

Intermediate Assembly

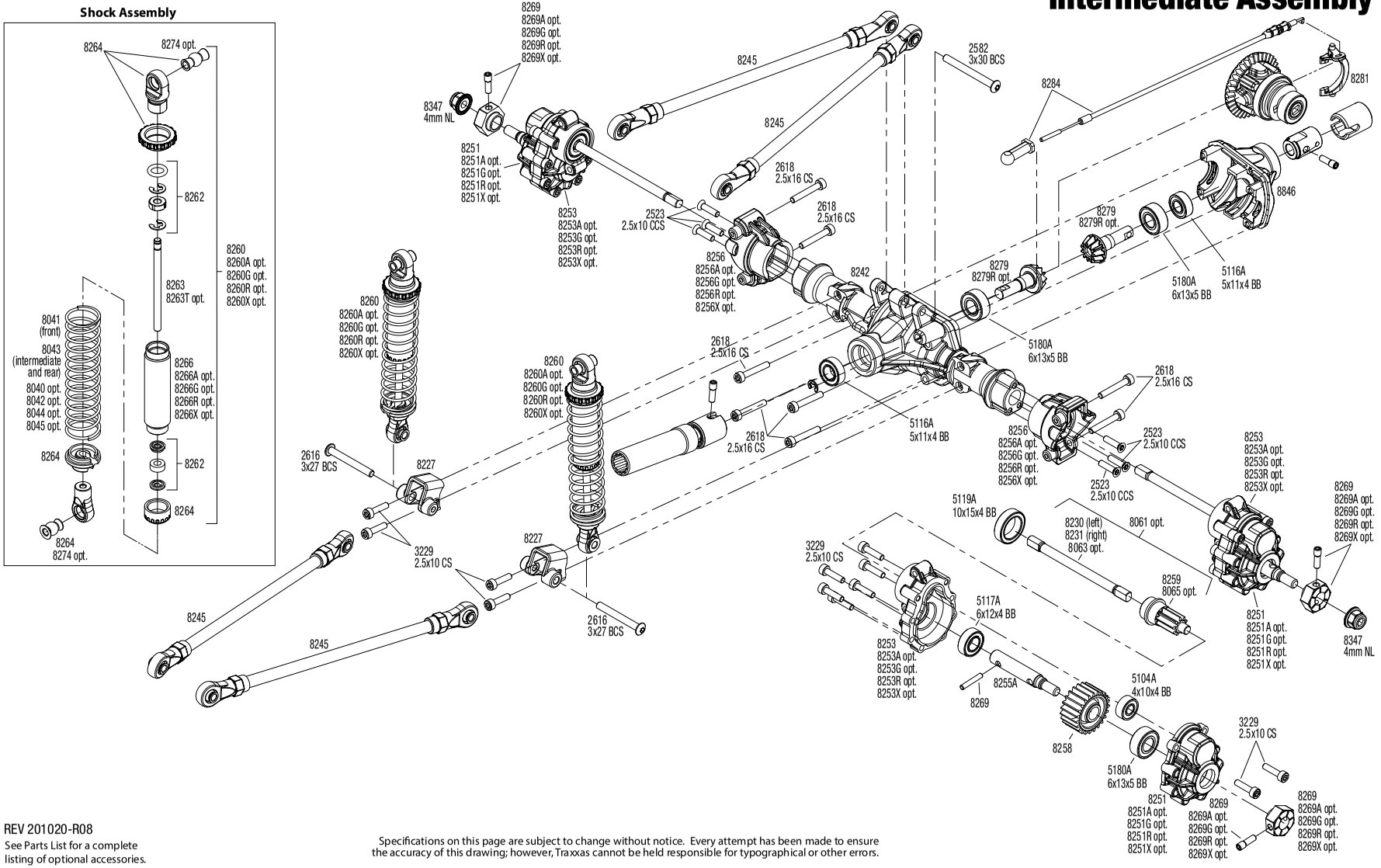

REV 201020-R08

See Parts List for a complete listing of optional accessories.

Specifications on this page are subject to change without notice. Every attempt has been made to ensure the accuracy of this drawing; however, Traxxas cannot be held responsible for typographical or other errors.

Questions? Call toll-free, 1-888-TRAXXAS

TRX6

Rear Assembly

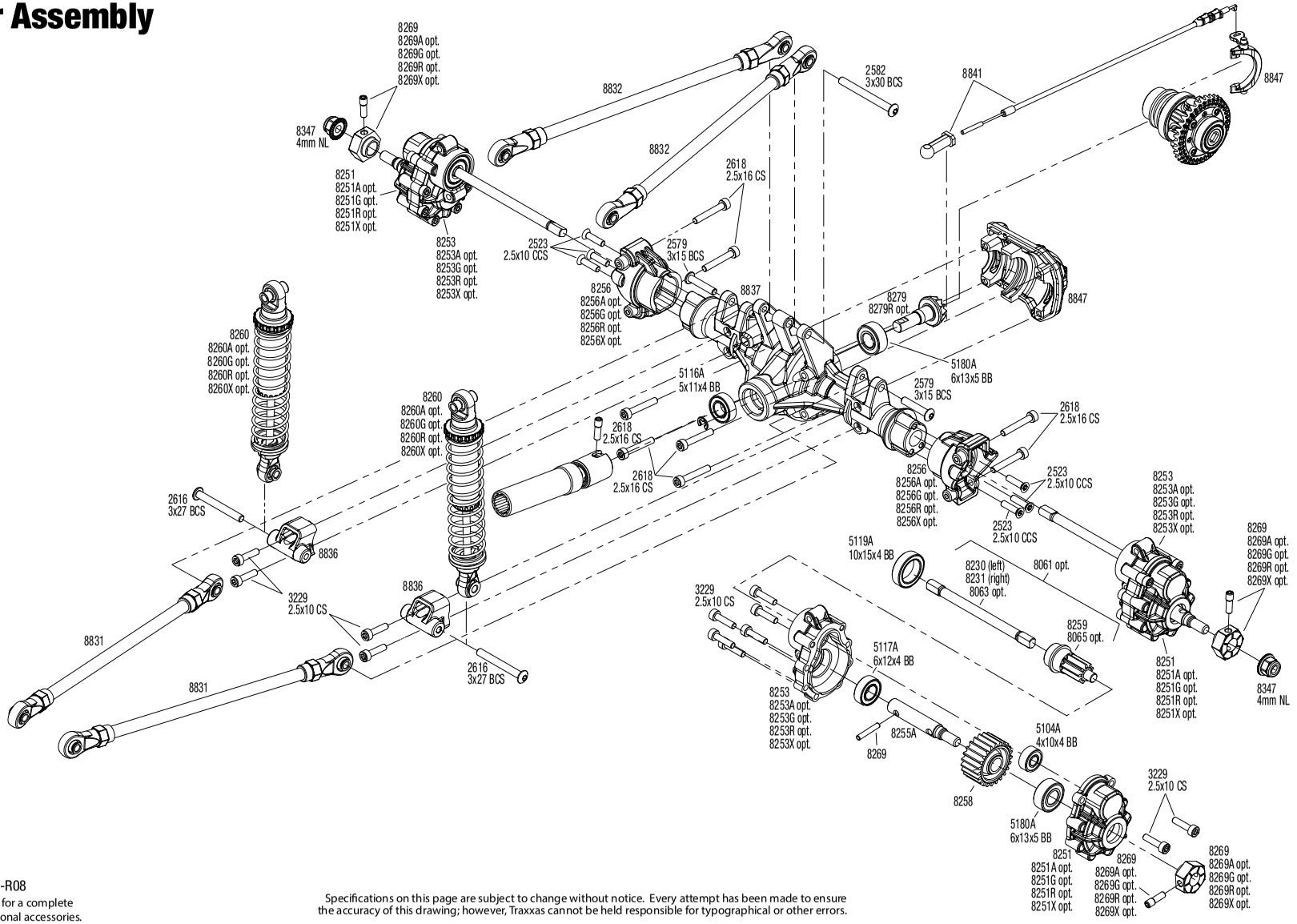

REV 201020-R08

See Parts List for a complete listing of optional accessories.

Specifications on this page are subject to change without notice. Every attempt has been made to ensure the accuracy of this drawing; however, Traxxas cannot be held responsible for typographical or other errors.

Transmission Assembly

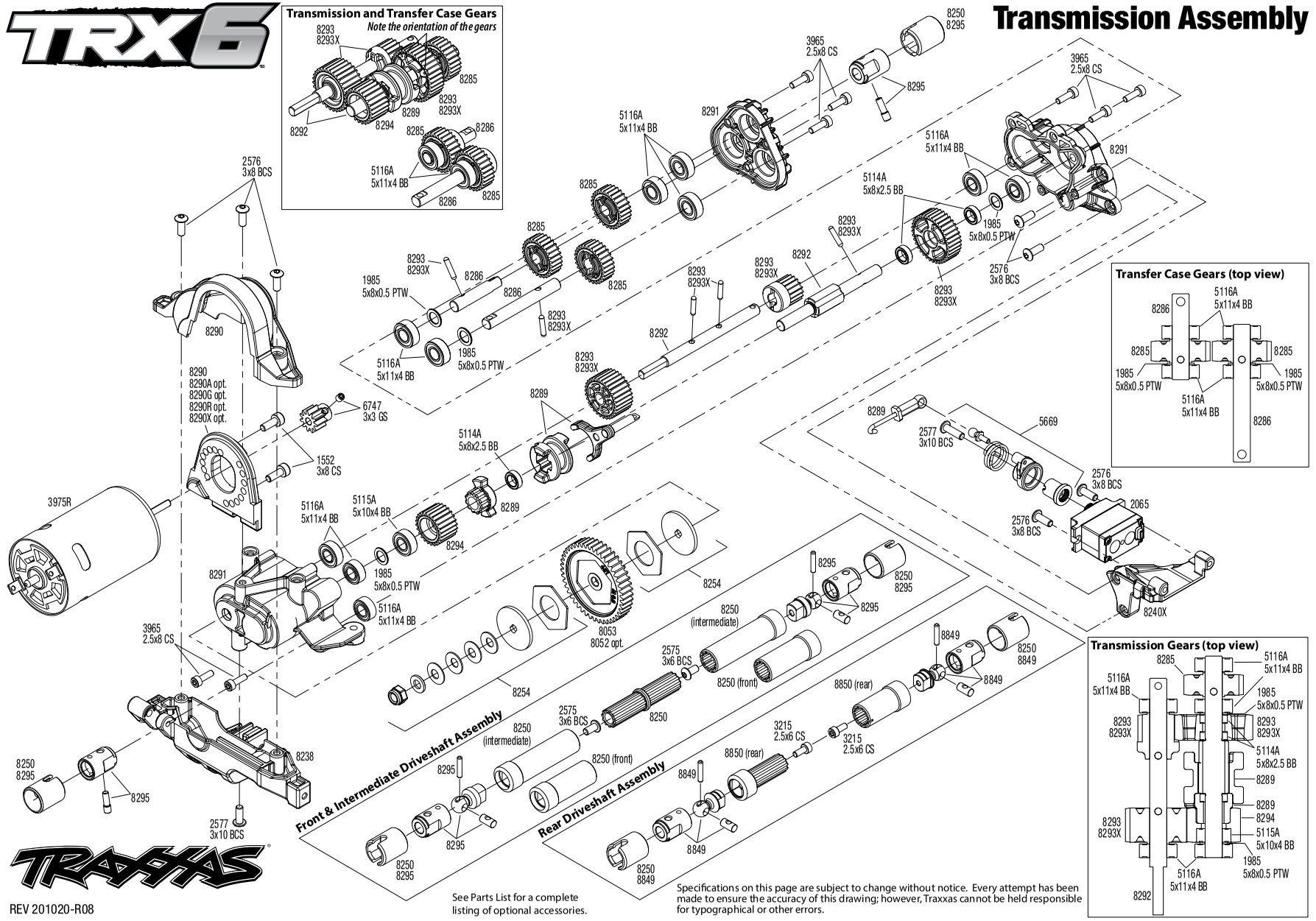

See Parts List for a complete listing of optional accessories.

Specifications on this page are subject to change without notice. Every attempt has been made to ensure the accuracy of this drawing; however, Traxxas cannot be held responsible for typographical or other errors.

REV 201020-R08

TRX-6 G 63 (88096-4)

Modular Assembly

REV 201020-R08

See Parts List for a complete listing of optional accessories.

Specifications on this page are subject to change without notice. Every attempt has been made to ensure the accuracy of this drawing; however, Traxxas cannot be held responsible for typographical or other errors.

Link Dimensions

Body Assembly

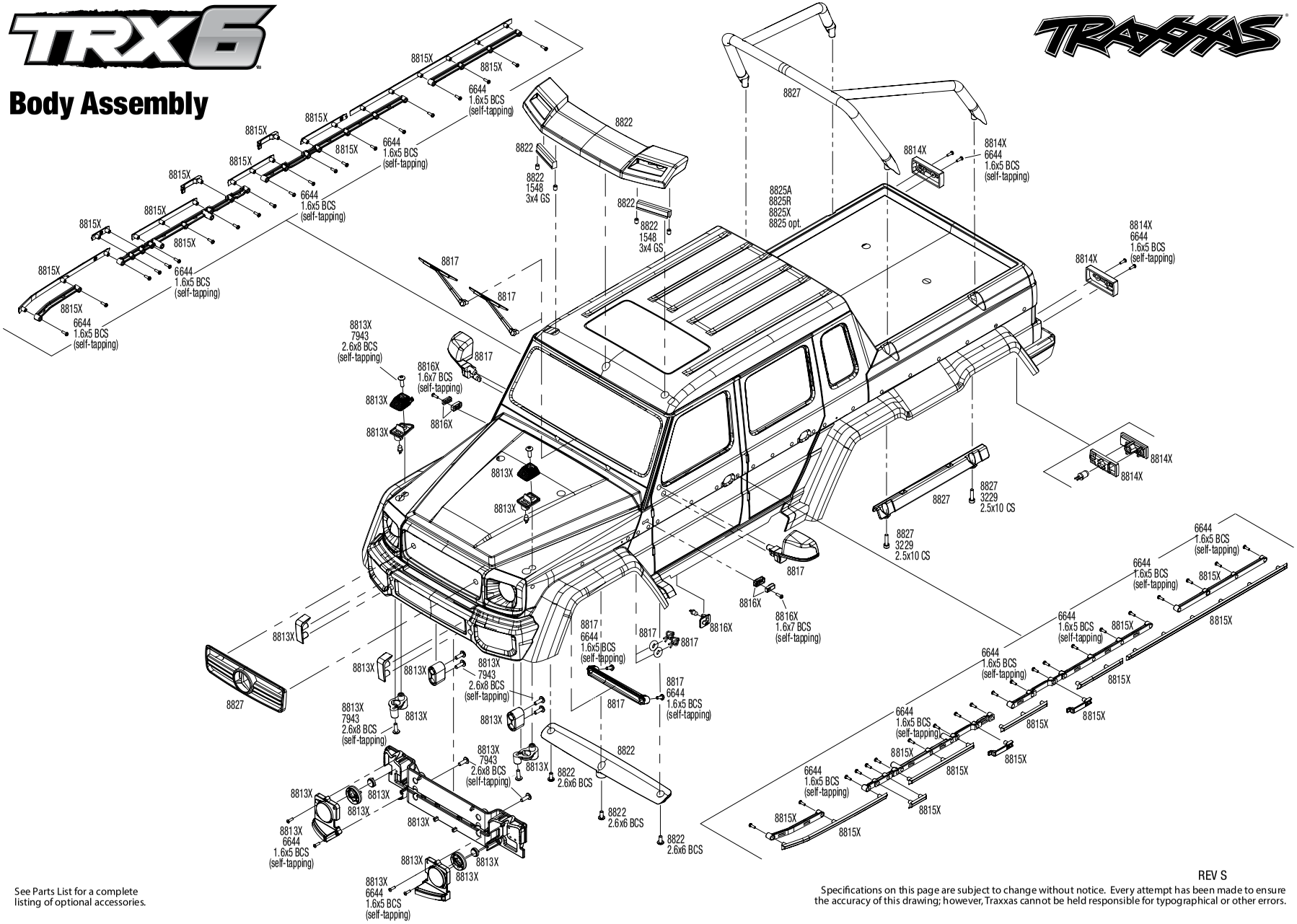

See Parts List for a complete listing of optional accessories.

REV S

Specifications on this page are subject to change without notice. Every attempt has been made to ensure the accuracy of this drawing; however, Traxxas cannot be held responsible for typographical or other errors.

TRX-6 G 63 (88096-4)

PARTS SHOWN IN BOLD ARE OPTIONAL ACCESSORIES.

Part categories and individual part listings are arranged alphabetically.

Axle Components

8241	Axle housing, front
8242	Axle housing, intermediate (TRX-6™) or rear (TRX-4®)
8837	Axle housing, rear (TRX-6™)
8227	Axle mount set (complete) (front & rear) (for suspension links)
8836	Axle mount set (rear) (for suspension links)
8228	Axle shaft, front (left)/ drive pin/ cross pin
8229	Axle shaft, front (right)/ drive pin/ cross pin
8060	**Axle shaft, front, heavy duty (left & right) (requires #8064 front portal drive input gear)**
8062	**Axle shaft, front, heavy duty (left & right)/ portal drive input gear (machined) (2) (assembled)**
8230	Axle shaft, rear (left)
8231	Axle shaft, rear (right)
8061	**Axle shaft, rear, heavy duty (left & right)/ portal drive input gear, rear (machined)**
8063	**Axle, rear, heavy duty (left & right) (requires #8065 rear portal drive input gear)**
8233	Cross pin (2)/ drive pin (2) (to rebuild front axle shafts)
8256	Portal drive axle mount, rear (left & right)
8256X	**Portal drive axle mount, rear, 6061-T6 aluminum (blue-anodized) (left and right)/ 2.5x16 CS (4)**
8256A	**Portal drive axle mount, rear, 6061-T6 aluminum (charcoal gray-anodized) (left and right)/ 2.5x16 CS (4)**
8256G	**Portal drive axle mount, rear, 6061-T6 aluminum (green-anodized) (left and right)/ 2.5x16 CS (4)**
8256R	**Portal drive axle mount, rear, 6061-T6 aluminum (red-anodized) (left and right)/ 2.5x16 CS (4)**
8252	Portal drive housing, inner, front (left & right)/ 2.5x4 BCS (6)
8253	Portal drive housing, inner, rear (left or right) (2)
8251	Portal drive housing, outer (front or rear) (2)
8064	**Portal drive input gear, front (machined) (left or right) (requires #8060 front axle shaft)**
8257	Portal drive input gear, front/ drive pin/ cross pin
8259	Portal drive input gear, rear
8065	**Portal drive input gear, rear (machined) (left or right) (requires #8063 rear axle)**
8258	Portal drive output gear, front or rear
8252X	**Portal housings, inner (front), 6061-T6 aluminum (blue-anodized) (2)/ 3x12 BCS (2)**
8252A	**Portal housings, inner (front), 6061-T6 aluminum (charcoal gray-anodized) (2)/ 3x12 BCS (2)**
8252G	**Portal housings, inner (front), 6061-T6 aluminum (green-anodized) (2)/ 3x12 BCS (2)**
8252R	**Portal housings, inner (front), 6061-T6 aluminum (red-anodized) (2)/ 3x12 BCS (2)**
8253X	**Portal housings, inner (rear), 6061-T6 aluminum (blue-anodized) (2)/ 2.5x10 CS (2)**
8253A	**Portal housings, inner (rear), 6061-T6 aluminum (charcoal gray-anodized) (2)/ 2.5x10 CS (2)**
8253G	**Portal housings, inner (rear), 6061-T6 aluminum (green-anodized) (2)/ 2.5x10 CS (2)**
8253R	**Portal housings, inner (rear), 6061-T6 aluminum (red-anodized) (2)/ 2.5x10 CS (2)**
8251X	**Portal housings, outer, 6061-T6 aluminum (blue-anodized) (2)/ 2.5x10 CS (12)**
8251A	**Portal housings, outer, 6061-T6 aluminum (charcoal gray-anodized) (2)/ 2.5x10 CS (12)**
8251G	**Portal housings, outer, 6061-T6 aluminum (green-anodized) (2)/ 2.5x10 CS (12)**
8251R	**Portal housings, outer, 6061-T6 aluminum (red-anodized) (2)/ 2.5x10 CS (12)**
8255A	Stub axle, extended (portal drive) (2)
8267	**Weight, portal housing, brass (34 grams) (2)/ 2.5x8 CS (6) (requires #8251X, 8251R, 8251A, or 8251G outer portal housing)**

Bearings & Bushings

5119A	Ball bearings, black rubber sealed (10x15x4mm) (2)
5120A	Ball bearings, black rubber sealed (12x18x4mm) (2)
5104A	Ball bearings, black rubber sealed (4x10x4mm) (2)
5115A	Ball bearings, black rubber sealed (5x10x4mm) (2)
5116A	Ball bearings, black rubber sealed (5x11x4mm) (2)
5114A	Ball bearings, black rubber sealed (5x8x2.5mm) (2)
5117A	Ball bearings, black rubber sealed (6x12x4mm) (2)
5180A	Ball bearings, black rubber sealed (6x13x5mm) (2)
5103A	Ball bearings, black rubber sealed (7x14x5mm) (2)

Body (Mercedes-Benz® G 63®)

8825	**Body, Mercedes-Benz® G 63® (clear, requires painting)/ decals/ window masks (includes grille, side mirrors, door handles, & windshield wipers)**
8825R	Body, Mercedes-Benz® G 63®, complete (gloss black metallic) (includes grille, side mirrors, door handles, & windshield wipers)
8825X	Body, Mercedes-Benz® G 63®, complete (matte graphite metallic) (includes grille, side mirrors, door handles, & windshield wipers)
8825A	Body, Mercedes-Benz® G 63®, complete (pearl white) (includes grille, side mirrors, door handles, & windshield wipers)
8826	Decals, Mercedes-Benz® G 63®
8813X	Grille, Mercedes-Benz® G 500® 4x4²/ grille mount/ grille insert/ headlight lens (2)/ headlight reflector (2)/ reflector lens (2)/ bumperette front (2)/ bumperette mount (2)/ turn signal housing (2)/ turn signal housing retainer (2)/ turn signal len
8827	Grille, Mercedes-Benz® G 63®/ roll bar/ mounts, left & right/ 2.6x8 BCS (self-tapping) (2)/ 2.5x10 CS (4) (fits #8825 body)
8817	Mirrors, side, black (left & right)/ o-rings (4)/ windshield wipers, left, right, & rear/ wiper retainers (2)/ body clips (4)/ 1.6x5 BCS (self-tapping) (3)
8822	Roof visor/ visor retainer/ visor lens (2)/ 2.6x6 BCS (3)/ 3x4 GS (4)
8816X	Side marker light housing (2)/ mount (2)/ lens (2)/ 1.6x7 BCS (self-tapping) (2)
8815X	Side trim, left & right (black)/ side trim retainers (8)/ door handles, left, right, & rear/ door handle mount/ 1.6x5 BCS (self-tapping) (42)
8814X	Tail light lens (2)/ tail light housing (2)/ tail light housing mount (2)/ reverse lens (2)/ 1.6x5 BCS (4) (left & right)

Body Accessories

1926	**Antenna caps, vinyl (2)/ antenna spool**
1726	Antenna, tube (1)/ vinyl antenna cap (1)/ wire retainer (1)
1834	Body clips (12) (standard size)
1834A	**Body clips, black (12) (standard size)**
3934	**Body clips, heavy duty (12)**
3934A	**Body clips, heavy duty (black) (12)**
8215	**Body mounts & posts, front & rear (complete set)**
8115	Body posts, front & rear
4915	Body washers, foam adhesive (10)
2514	**Decal sheet, racing sponsors**
8081	**Fender extensions (4)/ 3x8 flat-head screws (24) (requires #8080 narrow inner fenders)**
8080	Fenders, inner (narrow), front & rear (2 each)/ rock light covers (8)/ battery plate/ 3x8 flat-head screws (4)
8828	Fenders, inner (narrow), rear (2)/ rock light covers (6)/ 2.5x6 CS (8)
8072	**Fenders, inner, front & rear (2 each)/ rock light covers (8)/ battery plate/ 3x8 flat-head screws (4)**
9950	**Official Team Traxxas® racing decal set (flag logo/ 6-color)**

Bumpers & Skidplates

8234	**Bumper D-Rings, grey (front or rear)/ 2x12 CS (4)**
8234R	**Bumper D-rings, red (front or rear)/ 2.0x12 CS (4)**
8067	**Bumper mounts, front & rear**
8067X	**Bumper mounts, front & rear/ bumper mount, rear (offset)**
8237	**Bumper mounts, front & rear/ screw pins (4)**
8124	**Bumper, front (178mm wide)/ winch/ 2.6x8 BCS (1)**
8137	**Bumper, front (chrome)/ bumper mount/ 3x10 BCS (2)**
8235	**Bumper, front/ winch**
8236	**Bumper, rear**
8125	**Bumper, rear (176mm wide)**
8136	**Bumper, rear (chrome)/ bumper mount/ 3x8 BCS (2)**
8834	Bumper, rear (without trailer hitch receiver)
8820	Bumpers, front & rear
8835	Skid plates, Mercedes-Benz® G 63®, front & rear (satin-plated finish)/ 3x10 CCS (4)/ 3x10 BCS (4)
8830	Suspension mount, rear, TRX-6™ (1)/ chassis crossmember, rear (1)/ suspension link mounts (left & right)

Chassis & Attachments

8223	Battery plate/ battery strap/ 3x8 flat-head screws (4) (requires #8072 inner fenders)
8215	Body mounts & posts, front & rear (complete set)
8224	Box, receiver (sealed)/ wire cover/ foam pads/ silicone grease/ 3x8 BCS (5)/ 2.5x8 CS (2)
8829	Chassis rails, 590mm (steel) (left & right)
8818	Exhaust pipes (left & right)
8081	**Fender extensions (4)/ 3x8 flat-head screws (24) (requires #8080 narrow inner fenders)**
8080	Fenders, inner (narrow), front & rear (2 each)/ rock light covers (8)/ battery plate/ 3x8 flat-head screws (4)

8828	Fenders, inner (narrow), rear (2)/ rock light covers (6)/ 2.5x6 CS (8)
8218	Floor pans, left & right
8224X	**Receiver box cover (for use only with #8224 receiver box & #2260 BEC)/ foam pads/ seals/ silicone grease**
8819	Rock sliders/ rock slider caps (left & right)
8225	**Seal kit, receiver box (includes o-ring, seals, and silicone grease)**
8240X	Servo mount, 2-speed/ servo mount, T-Lock/ wire clips
8239	Servo mount, steering/ chassis crossmember
8216	Shock towers, front & rear (left & right)
8830	Suspension mount, rear, TRX-6™ (1)/ chassis crossmember, rear (1)/ suspension link mounts (left & right)
8226	Tray, battery

Differential Components

8840	Cable, T-lock (4XL)
8281	Carrier, differential/ differential slider/ T-Lock fork
8280A	Differential cover, front or rear (black)
8280X	**Differential cover, front or rear (chrome-plated)**
8280	**Differential cover, front or rear (grey)**
8280R	**Differential cover, front or rear (red)**
8846	Differential cover, TRX-6™ intermediate (black)
8847	Differential cover, TRX-6™ rear (black)/ T-lock fork (grey)
8195	Differential, locking, front and rear (assembled) (includes T-Lock cables and servo)
8282	Gear set, differential (output gears (2), spider gears (4), spider gear shaft (2))
8849	Output drive, transmission or differential (pin retainer (1)/ drive cup (1)/ drive ball (1)/ center ball (1)/ drive pin (1)/ 3x10 screw pin (1)/ cross pin (black) (1)/ 2.5x6 CS (with threadlock) (1)) (use with TRX-6™ axle configuration)
8295	Output drive, transmission or differential (pin retainer (1)/ drive cup (1)/ drive ball (1)/ drive pin (1)/ 3x11 screw pin (1)/ cross pin (black) (1) 3x6 BCS with threadlock (1))
8279	Ring gear, differential/ pinion gear, differential
8279R	**Ring gear, differential/ pinion gear, differential (machined)**
8287	**Ring gear, differential/ pinion gear, differential (overdrive, machined)**
8288	**Ring gear, differential/ pinion gear, differential (underdrive, machined)**
8297	**Spool/ differential housing plug/ e-clip**

Driveline Components

8850	Half shafts, center (internal splined, extra short (1)/ external splined, extra short (1)) (plastic parts only)
8250	Half shafts, center (internal splined, front (2) & internal splined, rear (2)/ external splined (2)/ pin retainer (4)) (plastic parts only)
8255A	Stub axle, extended (portal drive) (2)
8269	Wheel hubs, 12mm hex (2)/ stub axle pins (2) (steel)
8269X	**Wheel hubs, 12mm hex, 6061-T6 aluminum (blue-anodized) (4)/ screw pin (4)**
8269A	**Wheel hubs, 12mm hex, 6061-T6 aluminum (charcoal gray-anodized) (4)/ screw pin (4)**
8269G	**Wheel hubs, 12mm hex, 6061-T6 aluminum (green-anodized) (4)/ screw pin (4)**
8269R	**Wheel hubs, 12mm hex, 6061-T6 aluminum (red-anodized) (4)/ screw pin (4)**

Hardware

1552	Backplate screws (3x8mm cap-head machine) (6)/washers (6)/ wrench
1834	**Body clips (12) (standard size)**
1834A	Body clips, black (12) (standard size)
3934	**Body clips, heavy duty (12)**
3934A	**Body clips, heavy duty (black) (12)**
8167X	**Hardware kit, stainless steel, beadlock rings (contains stainless steel hardware for 4 wheels)**
5476X	**Hex wrenches; 1.5mm, 2mm, 2.5mm, 3mm, 2.5mm ball**
3647	**Nuts, 4mm flanged nylon locking (steel, serrated) (8)**
8347	Nuts, 4mm flanged nylon locking, serrated (black) (10)
1747R	**Nuts, aluminum, flanged, serrated (4mm) (blue-anodized) (4)**
1747G	**Nuts, aluminum, flanged, serrated (4mm) (green-anodized) (4)**
1747P	**Nuts, aluminum, flanged, serrated (4mm) (pink-anodized) (4)**
1985	PTFE-coated washers, 5x8x0.5mm (20) (use with ball bearings)
8221	Screw pin, 3x10mm (6)
3229	Screws, 2.5x10mm cap-head machine (hex drive) (6)
2523	Screws, 2.5x10mm countersunk machine (hex drive) (6)
3236	Screws, 2.5x12mm cap-head machine (6)
2618	Screws, 2.5x16mm cap-head machine (6)
3215	Screws, 2.5x6mm cap-head machine (hex drive) (6)
2617	Screws, 2.5x8mm button-head machine (hex drive) (6)
3965	Screws, 2.5x8mm cap-head machine (6)
2524	Screws, 2.5x8mm countersunk machine (hex drive) (6)
8299	Screws, 2.6x12mm button-head, self-tapping (hex drive) (6)
8167	Screws, 2x10mm cap-head, self-tapping (hex drive) (10)
2564	Screws, 2x8mm cap-head machine (hex drive) (6)
2577	Screws, 3x10mm button-head machine (hex drive) (6)
4859	Screws, 3x10mm flat-head machine (hex drive) (4)
2578	Screws, 3x12mm button-head machine (hex drive) (6)
2579	Screws, 3x15mm button-head machine (hex drive) (6)
2591	Screws, 3x23mm button-head machine (hex drive) (6)
2581	Screws, 3x25mm button-head machine (hex drive) (6)
2616	Screws, 3x27mm button-head machine (hex drive) (6)
2582	Screws, 3x30mm button-head machine (hex drive) (6)
2575	Screws, 3x6mm button-head machine (hex drive) (6)
3932	Screws, 3x6mm flat-head machine (hex drive) (6)
2576	Screws, 3x8mm button-head machine (hex drive) (6)
3931	Screws, 3x8mm flat-head machine (hex drive) (6)
3933	Screws, 4x16mm button-head machine (hex drive) (6)

LED Light Accessories

8031	**3-in-1 wire harness, LED light kit**
8089	**4-in-2 wire harness, LED light kit**
8897	**LED light harness, rock lights, TRX-6™ (requires #8026X for complete rock light set)**
8899	LED light set (contains headlights, tail lights, roof lights, and distribution block) (fits #8811 or #8825 body, requires #8028 power supply)
8898	LED light set, complete with power supply (contains headlights, tail lights, roof lights, & distribution block) (fits #8811 or #8825 body)
8028	**LED lights, power supply (regulated, 3V, 0.5-amp)/ 3-in-1 wire harness**
8026X	**LED rock light kit, TRX-4®/TRX-6™ (requires #8028 power supply and #8018, #8072, or #8080 inner fenders)**

Motors & Electronics

1926	Antenna caps, vinyl (2)/ antenna spool
1726	Antenna, tube (1)/ vinyl antenna cap (1)/ wire retainer (1)
2262	**BEC, complete (includes receiver box cover and seals)**
2064	Gear set (for 2065 waterproof sub-micro servo)
2064X	**Gear set, metal (for 2065X waterproof sub-micro servo)**
2072X	Gear set, metal (for 2070, 2075 servos)
2252	**Gear set, metal (for 2250, 2255 servos)**
2072R	**Gear set, metal, high speed (for 2070, 2075 servos)**
8290X	**Motor mount plate, 6061-T6 aluminum (blue-anodized)**
8290A	**Motor mount plate, 6061-T6 aluminum (charcoal gray-anodized)**
8290G	**Motor mount plate, 6061-T6 aluminum (green-anodized)**
8290R	**Motor mount plate, 6061-T6 aluminum (red-anodized)**
3975R	Motor, Titan® 550, reverse rotation (21-turns/ 14 volts) (1)
8290	Plate, motor/ upper spur gear cover
2254	**Servo case, aluminum (blue-anodized) (middle) (for 2250 servo)**
2253	**Servo case, aluminum (red-anodized) (middle) (for 2255 servo)**
2251	**Servo case, plastic (top, middle, bottom)/ gaskets/ hardware (for 2250, 2255 servos)**
2063	Servo case/gaskets (for 2065 waterproof sub-micro servo)
2063X	**Servo case/gaskets (for 2065X metal gear, waterproof, sub-micro servo)**
5669	Servo horn (with built-in spring and hardware) (for Summit locking differential)
8843	Servo horn (with built-in spring and hardware) (for TRX-6™ locking differential)
2075R	**Servo, digital high-speed, metal gear (ball bearing), waterproof**
2250	**Servo, digital high-torque 330 coreless, metal gear (ball bearing), waterproof (#2262 external BEC and #8247X metal servo horn recommended for optimal performance)**
2255	**Servo, digital high-torque 400 brushless, metal gear (ball bearing), waterproof (#2262 external BEC and #8247X metal servo horn recommended for optimal performance)**
2075X	Servo, digital high-torque, metal gear (ball bearing), waterproof
2065	Servo, sub-micro, waterproof
2065X	**Servo, sub-micro, waterproof, metal gear**
3025	XL-5HV 3s Electronic Speed Control, waterproof (low-voltage detection, fwd/rev/brake)
2261	**Y-harness, BEC**

Radio System, Batteries & Chargers

2849X	**4000mAh 11.1v 3-Cell 25C LiPo Battery**
2872X	**5000mAh 11.1v 3-Cell 25C LiPo Battery**
2842X	**5000mAh 7.4v 2-Cell 25C LiPo Battery**
2843X	**5800mAh 7.4v 2-Cell 25C LiPo Battery**
2869X	**7600mAh 7.4v 2-Cell 25C LiPo Battery**
2976	**AC to DC converter, 40W**
2938X	**Adapter, Traxxas® iD® LiPo battery (adapts Traxxas iD batteries to separate balance ports)**
1726	Antenna, tube (1)/ vinyl antenna cap (1)/ wire retainer (1)
2943	**Battery charge indicators (green (4), blue (4), grey (4))**

TRX-6 G 63 (88096-4)

6548	Battery door, transmitter (replacement for #6516, 6517, 6528, 6529, 6530 transmitters)
8222	**Battery strap (for 2200 2-cell and 1400 3-cell LiPo batteries)**
2914	**Battery, Power Cell AA Alkaline (4)**
2923X	**Battery, Power Cell, 3000mAh (NiMH, 7-C flat, 8.4V)**
2940X	**Battery, Series 3 Power Cell, 3300mAh (NiMH, 7-C flat, 8.4V)**
2950X	**Battery, Series 4 Power Cell, 4200mAh (NiMH, 7-C flat, 8.4V)**
2960X	**Battery, Series 5 Power Cell, 5000mAh (NiMH, 7-C flat, 8.4V)**
2983	**Battery/charger completer pack (includes #2969 2-amp NiMH peak detecting AC charger (1), #2923X 3000mAh 8.4V 7-cell NiMH battery (1))**
2992	**Battery/charger completer pack (includes #2970 iD® charger (1), #2843X 5800mAh 7.4V 2-cell 25C LiPo battery (1))**
2994	**Battery/charger completer pack (includes #2970 iD® charger (1), #2849X 4000mAh 11.1v 3-Cell 25C LiPo Battery (1))**
2991	**Battery/charger completer pack (includes #2972 Dual iD® charger (1), #2869X 7600mAh 7.4V 2-cell 25C LiPo battery (2))**
2262	**BEC, complete (includes receiver box cover and seals)**
2975	**Charger, DC, 4 amp (6 - 7 cell, 7.2 - 8.4 volt, NiMH)**
2972	**Charger, EZ-Peak® Dual, 100W, NiMH/LiPo with iD® Auto Battery Identification**
2973	**Charger, EZ-Peak® Live Dual, 200W, NiMH/LiPo with iD® Auto Battery Identification**
2971	**Charger, EZ-Peak® Live, 100W, NiMH/LiPo with iD® Auto Battery Identification**
2970	**Charger, EZ-Peak® Plus, 4 amp, NiMH/LiPo with iD® Auto Battery Identification**
6525	**Communication link, telemetry expander**
6541	**Connector, power tap (with cable) (long)/ wire tie**
6512	Cover plate, Traxxas Link™ Wireless Module
2978	**Fuse, charger, 5A (2) (for #2974, 2975, 2977)**
2064	Gear set (for 2065 waterproof sub-micro servo)
2064X	**Gear set, metal (for 2065X waterproof sub-micro servo)**
2072X	Gear set, metal (for 2070, 2075 servos)
2252	**Gear set, metal (for 2250, 2255 servos)**
2072R	**Gear set, metal, high speed (for 2070, 2075 servos)**
2968X	**LiPo cell voltage checker/balancer (includes #2938X adapter for Traxxas® iD® batteries)**
2968	**LiPo cell voltage checker/balancer (requires #2938X adapter for Traxxas® iD® batteries)**
6561	**Mount, telemetry expander**
6535	**Mount, temperature sensor (electric motors)/ wire tie/ thermal pad**
6533	Receiver, micro, TQi 2.4GHz with telemetry & TSM (5-channel)
6552	**Seal kit, expander box (includes o-ring, seals, and silicone grease)**
6526	**Sensor, auto-detectable, temperature**
6527	**Sensor, auto-detectable, voltage**
6521	**Sensor, temperature and voltage (long)**
2254	**Servo case, aluminum (blue-anodized) (middle) (for 2250 servo)**
2253	**Servo case, aluminum (red-anodized) (middle) (for 2255 servo)**
2251	**Servo case, plastic (top, middle, bottom)/ gaskets/ hardware (for 2250, 2255 servos)**
2063	Servo case/gaskets (for 2065 waterproof sub-micro servo)
2063X	**Servo case/gaskets (for 2065X metal gear, waterproof, sub-micro servo)**
2075R	**Servo, digital high-speed, metal gear (ball bearing), waterproof**
2250	**Servo, digital high-torque 330 coreless, metal gear (ball bearing), waterproof (#2262 external BEC and #8247X metal servo horn recommended for optimal performance)**
2255	**Servo, digital high-torque 400 brushless, metal gear (ball bearing), waterproof (#2262 external BEC and #8247X metal servo horn recommended for optimal performance)**
2075X	Servo, digital high-torque, metal gear (ball bearing), waterproof
2065	Servo, sub-micro, waterproof
2065X	**Servo, sub-micro, waterproof, metal gear**
6553X	**Telemetry expander 2.0 and GPS module 2.0, TQi radio system**
6550X	**Telemetry expander 2.0, TQi radio system (for use only with #6551X GPS module)**
6551X	**Telemetry GPS module 2.0, TQi radio system (for use only with #6550X telemetry expander)**
6509R	**TQi 2.4 GHz High Output radio system, 2-channel, Traxxas Link™ enabled, TSM (2-ch transmitter, 5-ch micro receiver)**
6507R	**TQi 2.4 GHz High Output radio system, 4-channel with Traxxas Link™ Wireless Module, TSM (4-ch transmitter, 5-ch micro receiver)**
6530	Transmitter, TQi Traxxas Link™ enabled, 2.4GHz high output, 4-channel (transmitter only)
6511	**Traxxas Link™ Wireless Module**
2261	**Y-harness, BEC**

Ready-To-Race Model

88096-4	TRX-6™ Scale and Trail™ Crawler with Mercedes-Benz® G 63® AMG Body: 6X6 Electric Trail Truck with TQi Traxxas Link™ Enabled 2.4GHz Radio System

Shocks (GTS)

8266	Body, GTS shock (aluminum, silver-anodized) (1)
8266X	**Body, GTS shock (hard-anodized, PTFE-coated aluminum) (1)**
8266A	**Body, GTS shock, aluminum (blue-anodized) (1)**
8266G	**Body, GTS shock, aluminum (green-anodized) (1)**
8266R	**Body, GTS shock, aluminum (red-anodized) (1)**
8264	Caps & spring retainers, GTS shocks (upper cap (2)/ hollow balls (4)/ bottom cap (2)/ upper retainer (2)/ lower retainer (2))
8274	**Hollow ball set, complete, TRX-4® (aluminum, PTFE-coated)**
5475	Multi-tool (plastic)
8261	**Piston, damper (red) (4)/ e-clips (8)**
8262	Rebuild kit, GTS shocks (x-rings, o-rings, pistons, bushings, e-clips, and rod ends)
8263	Shock shaft, 3x47mm (GTS) (2)
8263T	**Shock shaft, 3x47mm (GTS) (titanium nitride-coated) (2)**
8260X	**Shocks, GTS hard-anodized, PTFE-coated aluminum bodies with TiN shafts (assembled with spring retainers) (2)**
8260A	**Shocks, GTS, aluminum (blue-anodized) (assembled with spring retainers) (2)**
8260G	**Shocks, GTS, aluminum (green-anodized) (assembled with spring retainers) (2)**
8260R	**Shocks, GTS, aluminum (red-anodized) (assembled with spring retainers) (2)**
8260	Shocks, GTS, silver aluminum (assembled with spring retainers) (2)
1666	Silicone shock oil (30 wt)

Slipper Clutch Components

8292	Input shaft/ output shaft (transmission)
8286	Output shafts (transfer case), front & rear
8254	Rebuild kit, slipper clutch (steel disc (2)/ friction insert (2)/ 4.0mm NL (1)/ spring washers (4), metal washer (1))
8249	**Slipper eliminator plate**

Springs

8042	**Springs, shock (natural finish) (GTS) (0.22 rate, yellow stripe) (2)**
8043	Springs, shock (natural finish) (GTS) (0.30 rate, white stripe) (2)
8044	**Springs, shock (natural finish) (GTS) (0.39 rate, orange stripe) (2)**
8041	Springs, shock (natural finish) (GTS) (0.45 rate) (2)
8040	**Springs, shock (natural finish) (GTS) (0.54 rate, green stripe) (2)**
8045	**Springs, shock (natural finish) (GTS) (0.61 rate, blue stripe) (2)**

Spur Gears & Pinion Gears

6746	**Gear, 10-T pinion (32-p) (steel)/ set screw**
6747	Gear, 11-T pinion (32-p) (steel)/ set screw
3942X	**Gear, 12-T pinion (32-p), heavy duty (machined, hardened steel)/ set screw**
3943X	**Gear, 13-T pinion (32-p), heavy duty (machined, hardened steel)/ set screw**
3944X	**Gear, 14-T pinion (32-p), heavy duty (machined, hardened steel)/ set screw**
3945X	**Gear, 15-T pinion (32-p), heavy duty (machined, hardened steel)/ set screw**
3946X	**Gear, 16-T pinion (32-p), heavy duty (machined, hardened steel)/ set screw**
3947X	**Gear, 17-T pinion (32-p), heavy duty (machined, hardened steel)/ set screw**
3948X	**Gear, 18-T pinion (32-p), heavy duty (machined, hardened steel)/ set screw**
3949X	**Gear, 19-T pinion (32-p), heavy duty (machined, hardened steel)/ set screw**
3950X	**Gear, 20-T pinion (32-p), heavy duty (machined, hardened steel)/ set screw**
3951X	**Gear, 21-T pinion (32-p), heavy duty (machined, hardened steel)/ set screw**
3952X	**Gear, 22-T pinion (32-p), heavy duty (machined, hardened steel)/ set screw**
6745	**Gear, 9-T pinion (32-p) (steel)/ set screw**
8052	**Spur gear, 39-tooth (32-pitch)**
8053	Spur gear, 45-tooth (32-pitch)

Steering Components

8232	Caster blocks (portal drive), left & right/ kingpin bushings (4)
8232X	**Caster blocks, 6061-T6 aluminum (blue-anodized), left and right**
8232A	**Caster blocks, 6061-T6 aluminum (charcoal gray-anodized), left and right**
8232G	**Caster blocks, 6061-T6 aluminum (green-anodized), left and right**
8232R	**Caster blocks, 6061-T6 aluminum (red-anodized), left and right**

2072X Gear set, metal (for 2070, 2075 servos)
2072R Gear set, metal, high speed (for 2070, 2075 servos)
8274 Hollow ball set, complete, TRX-4® (aluminum, PTFE-coated)
5355 Hollow ball, tall centered (2)/ tall offset hollow ball (2)/ bump steer adjustment shims; 3.5mm (2), 1.17mm (2)
8275 Rod end set, complete (standard (10), angled 10-degrees (8), offset (4))
8276 Rod ends (10)
8277 Rod ends, angled 10-degrees (8)
2742 Rod ends, long (6)/ hollow ball connectors (6)
8278 Rod ends, offset (4)
8247X Servo horn, steering, metal/ 3x14 BCS (1)
2075R Servo, digital high-speed, metal gear (ball bearing), waterproof
2075X Servo, digital high-torque, metal gear (ball bearing), waterproof
5529 Shim set, 3x7x1mm (2), 3x6x0.5mm (4), 3x7x2mm (2)/ hollow balls, captured (4)
8246 Steering link, 5x60mm (1)/ draglink, 5x117mm (1) (steel)
8243 Suspension link, front, 5x100mm (lower) (steel) (2)
8244 Suspension link, front, 5x63mm (upper) (steel) (2)
8245 Suspension link, rear, 5x121mm (upper or lower) (steel) (2)

Suspension Linkage

8274 Hollow ball set, complete, TRX-4® (aluminum, PTFE-coated)
5355 Hollow ball, tall centered (2)/ tall offset hollow ball (2)/ bump steer adjustment shims; 3.5mm (2), 1.17mm (2)
8275 Rod end set, complete (standard (10), angled 10-degrees (8), offset (4))
8276 Rod ends (10)
8277 Rod ends, angled 10-degrees (8)
2742 Rod ends, long (6)/ hollow ball connectors (6)
8278 Rod ends, offset (4)
5529 Shim set, 3x7x1mm (2), 3x6x0.5mm (4), 3x7x2mm (2)/ hollow balls, captured (4)
8243 Suspension link, front, 5x100mm (lower) (steel) (2)
8244 Suspension link, front, 5x63mm (upper) (steel) (2)
8245 Suspension link, rear, 5x121mm (upper or lower) (steel) (2)
8831 Suspension links, rear lower, 5x95mm (2) (steel)
8832 Suspension links, rear upper, 5x76mm (2) (steel)
8833 Suspension mount, intermediate, TRX-6™ (1)/ bearing cap (1)/ suspension link mounts (left & right)/ 2.5x12 CS (4)

Team Traxxas Items

2514 Decal sheet, racing sponsors
6160X DVD, Maxx® Power! Full Throttle Action (sleeve)
9950 Official Team Traxxas® racing decal set (flag logo/ 6-color)
9909 Traxxas® racing banner, red & black (3x7 feet)

Tires & Wheels

8169T Beadlock rings, black (1.9") (aluminum) (4)/ 2x10 CS (48)
8169X Beadlock rings, blue (1.9") (aluminum) (4)/ 2x10 CS (48)
8169G Beadlock rings, green (1.9") (aluminum) (4)/ 2x10 CS (48)
8169A Beadlock rings, orange (1.9") (aluminum) (4)/ 2x10 CS (48)
8169R Beadlock rings, red (1.9") (aluminum) (4)/ 2x10 CS (48)
8875 Center caps (2)/ beadlock rings (2) (requires #8255A extended stub axle)
8164 Center caps, wheel (chrome) (4)/ decal sheet (requires #8255A extended stub axle)
8176 Center caps, wheel (chrome) (4)/ decal sheet (requires #8255A extended stub axle)
8174 Tires and wheels, assembled (Method 105 1.9” black chrome beadlock wheels, Canyon Trail 4.6x1.9” tires, foam inserts) (1 left, 1 right)
8166X Tires and wheels, assembled, glued (1.9" chrome wheels, Canyon Trail 4.6x1.9" tires) (4)/ center caps (4)/ decal sheet (requires #8255A extended stub axle)
8166 Tires and wheels, assembled, glued (1.9" chrome wheels, Canyon Trail 4.6x1.9” tires) (2)/ center caps (2)/ decal sheet (requires #8255A extended stub axle)
8177 Tires and wheels, assembled, glued (1.9" chrome wheels, Canyon Trail 4.6x1.9” tires) (2)/ center caps (2)/ decal sheet (requires #8255A extended stub axle)
8183X Tires and wheels, assembled, glued (1.9" classic chrome wheels, Canyon Trail 4.6x1.9" tires) (4)/ center caps (4) (requires #8255A extended stub axle)
8874 Tires and wheels, assembled, glued (2.2" black Mercedes-Benz® G 63® wheels, Canyon RT 4.6x2.2" tires) (2)/ center caps (2)/ beadlock rings (2) (requires #8255A extended stub axle)
8273 Tires and wheels, assembled, glued (Tactical 1.9” wheels, Canyon Trail 4.6x1.9” tires) (2)
8272X Tires and wheels, assembled, glued (TRX-4® 1.9” satin beadlock wheels, Canyon Trail 4.6x1.9” tires) (2)
8272 Tires and wheels, assembled, glued (TRX-4® 1.9” wheels, Canyon Trail 4.6x1.9” tires) (2)
8179 Tires and wheels, assembled, glued (TRX-4® Sport 1.9” wheels, Canyon Trail 4.6x1.9” tires) (2)
8871 Tires, Canyon RT 4.6x2.2"/ foam inserts (2) (wide) (requires 2.2" diameter wheel)
8270 Tires, Canyon Trail 4.6x1.9” (S1 compound)/ foam inserts (2)
8269 Wheel hubs, 12mm hex (2)/ stub axle pins (2) (steel)
8269X Wheel hubs, 12mm hex, 6061-T6 aluminum (blue-anodized) (4)/ screw pin (4)
8269A Wheel hubs, 12mm hex, 6061-T6 aluminum (charcoal gray-anodized) (4)/ screw pin (4)
8269G Wheel hubs, 12mm hex, 6061-T6 aluminum (green-anodized) (4)/ screw pin (4)
8269R Wheel hubs, 12mm hex, 6061-T6 aluminum (red-anodized) (4)/ screw pin (4)
8165 Wheels, 1.9", chrome (2)/ center caps (2)/ decal sheet (requires #8255A extended stub axle)
8175 Wheels, 1.9", chrome (2)/ center caps (2)/ decal sheet (requires #8255A extended stub axle)
8173 Wheels, Method 105 1.9" (black chrome, beadlock) (beadlock rings sold separately)
8173A Wheels, Method 105 1.9" (charcoal gray, beadlock) (beadlock rings sold separately)
8268 Wheels, Tactical 1.9 (2)
8271 Wheels, TRX-4® 1.9 (2)
8271X Wheels, TRX-4® 1.9 (satin beadlock) (2)
8178 Wheels, TRX-4® Sport 1.9 (2)

Transmission Components

8283 Cable, T-lock (front)
8284 Cable, T-lock (rear)
8841 Cable, T-lock (rear) (TRX-6™)
8195 Differential, locking, front and rear (assembled) (includes T-Lock cables and servo)
8289 Drive hub, 2-speed/ shift dog/ shift fork/ 2-speed linkage
8293X Gear set, transmission, metal (includes 18T, 30T input gears, 36T output gear, 2x9.8 pins (5))
8291 Gearbox housing (includes main housing, front housing, & cover)
8285 Gears, transfer case (3)
5041 Grease, premium high performance (20cc)
8292 Input shaft/ output shaft (transmission)
8290X Motor mount plate, 6061-T6 aluminum (blue-anodized)
8290A Motor mount plate, 6061-T6 aluminum (charcoal gray-anodized)
8290G Motor mount plate, 6061-T6 aluminum (green-anodized)
8290R Motor mount plate, 6061-T6 aluminum (red-anodized)
8849 Output drive, transmission or differential (pin retainer (1)/ drive cup (1)/ drive ball (1)/ center ball (1)/ drive pin (1)/ 3x10 screw pin (1)/ cross pin (black) (1)/ 2.5x6 CS (with threadlock) (1)) (use with TRX-6™ axle configuration)
8294 Output gear, high range, 24T (metal)
8286 Output shafts (transfer case), front & rear
8290 Plate, motor/ upper spur gear cover
8249 Slipper eliminator plate
8296 Transmission gears, single speed, metal
8196 Two speed conversion kit

Traxxas Tools

3433X Body reamer (aluminum handle)
3433 Body reamer (plastic handle)
3436 Cap, body reamer
3432 Scissors, curved tip
3431 Scissors, straight tip
8712 Speed Bit Essentials Set, hex and nut driver, 7-piece, includes premium handle (medium), travel pouch, hex drivers (straight: 1.5mm, 2.0mm, 2.5mm) and nut drivers (5.0mm, 5.5mm, 7.0mm, and 8.0mm), 1/4” drive
8721 Speed bit handle, medium (one piece)
8720 Speed bit handle, premium, large (rubber overmold)
8722 Speed bit handle, premium, medium (rubber overmold)
8710 Speed Bit Master Set, hex and nut driver, 13-piece, includes premium handle (medium), travel pouch, hex drivers (straight: 1.5mm, 2.0mm, 2.5mm, 3.0mm), (ball-end: 2.0mm, 2.5mm, 3.0mm), and nut drivers (4.00mm, 4.50mm, 5.00mm, 5.50mm, 7.00mm, 8.00mm),
8711 Speed Bit Master Set, hex driver, 7-piece straight and ball end, includes premium handle (medium), travel pouch, hex drivers (straight: 1.5mm, 2.0mm, 2.5mm, 3.0mm) (ball end: 2.0mm, 2.5mm, 3.0mm), 1/4" drive
8719 Speed Bit Master Set, nut driver, 6-piece, includes premium handle (medium), travel pouch, and nut drivers (4.0mm, 4.5mm, 5.0mm, 5.5mm, 7.0mm, 8.0mm), 1/4" drive

TRX-6 G 63 (88096-4)

8716	Speed Bit Set, hex driver, 2-piece ball-end (2.0mm, 2.5mm), 1/4" drive
8716X	Speed Bit Set, hex driver, 3-piece ball-end (2.0mm, 2.5mm, 3.0mm), 1/4" drive
8715	Speed Bit Set, hex driver, 3-piece straight (1.5mm, 2.0mm, 2.5mm), 1/4" drive
8715X	Speed Bit Set, hex driver, 4-piece straight (1.5mm, 2.0mm, 2.5mm, 3.0mm), 1/4" drive
3415	Tool set with pouch (includes 1.5mm, 2.0mm, 2.5mm, 3.0mm, 3.5mm, 4mm drivers/ 4mm, 5mm, 5.5mm, 7mm and 8mm nut drivers/ 2mm, 4mm, and 5mm slotted screwdrivers/ #00 Phillips, #0 Phillips, and #1 Phillips screwdrivers/ 4mm and 8mm wrench/ driver handle

If you have questions or need technical assistance, call Traxxas at:

1-888-TRAXXAS

(1-888-872-9927) (U.S. residents only)

For orders, calls outside the U.S., and other information, call 972-549-3000, or fax to 972-549-3011 e-mail Traxxas at support@Traxxas.com

TRAXXAS.COM

REV. 201020 0905

LaTrax



MODEL 6608



MODEL 75054-5



MODEL 76064-5



MODEL 76054-5

2020

PARTS CATALOG

POWERED BY TRAXXAS

Patents Pending


LaTRAX
POWERED BY
TRAXXAS
Patents Pending

ALIAS™

Quad Rotor Helicopter



FEATURES



Ergonomic 2.4GHz Transmitter



3 Flight Modes for All Skill Levels



3.7-Volt LiPo battery and USB charger



High Power Motors and Durable Frame

Quad-Rotor Flight Re-Imagined!

Alias is a clean-sheet design that focuses on the performance and design elements that make flying, and even learning to fly, fun. The first mission objective was durability. Alias is built around a unique molded-composite frame that is combined with clever high-tech construction to make it extremely light and virtually indestructible. Flying fun goes on and on without worrying about breakage from crash damage. The next mission was performance. Fun always comes from having more power so Alias' motors have 50% more power than standard motors, and when combined with the lightweight design and high-tech materials, Alias is lightning quick and ultra-responsive. A completely new flight control system was developed that provides unmatched 6-axis stability that works in the background without impacting performance and speed. It acts like a virtual spring that snaps Alias back to level controlled flight. New pilots can fly faster and perform aerobatic maneuvers sooner than they ever thought possible with Alias' unique flight control system.


LaTRAX
POWERED BY
TRAXXAS
Patents Pending

ALIAS™

Assembly

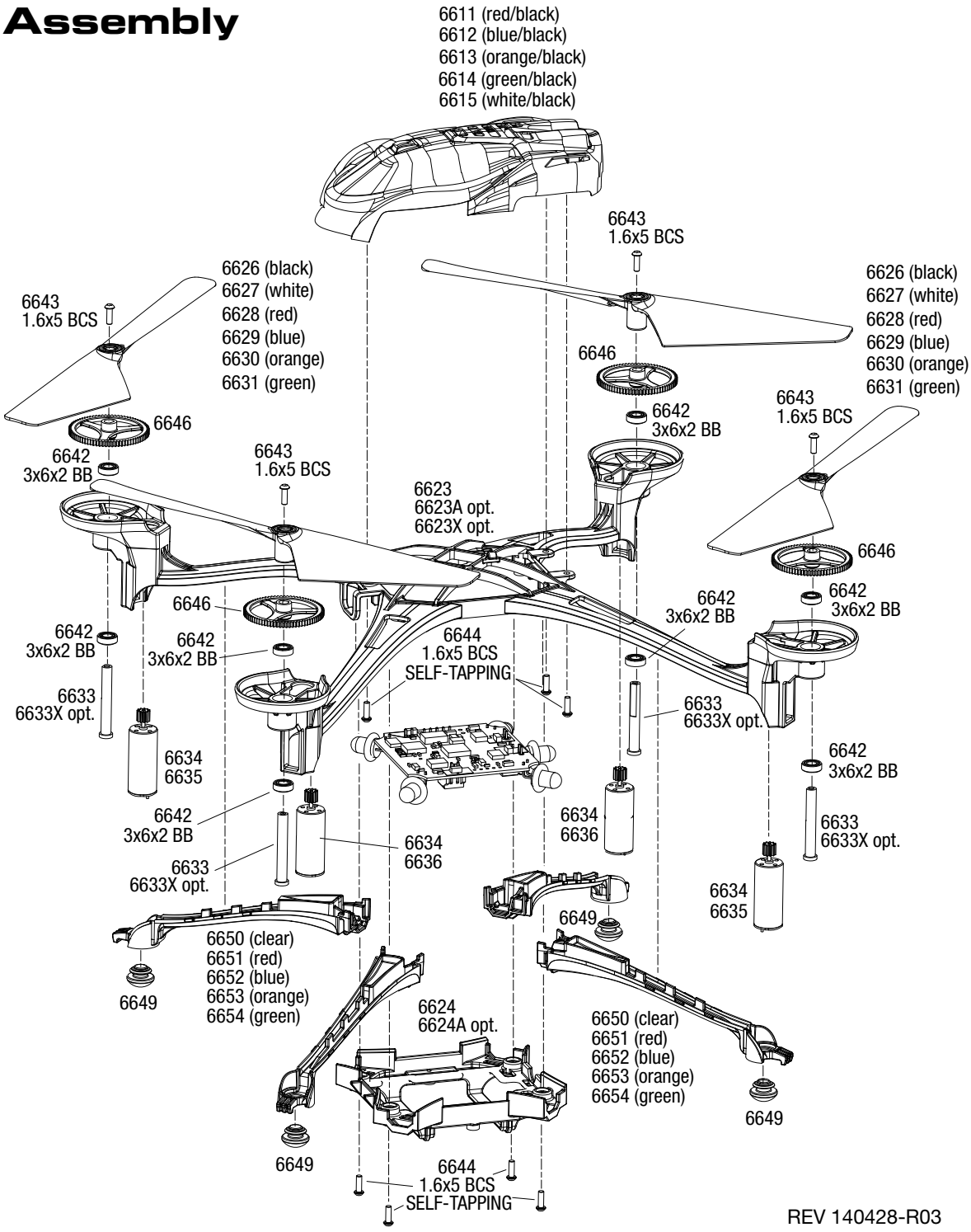

REV 140428-R03

PARTS SHOWN IN BOLD ARE OPTIONAL ACCESSORIES.

Part categories and individual part listings are arranged alphabetically.
Prices are shown in US Dollars.

Canopies & Blades

6612	**Canopy, Alias®, blue/ 1.6x5mm BCS (self-tapping) (3)**
6614	**Canopy, Alias®, green/ 1.6x5mm BCS (self-tapping) (3)**
6613	**Canopy, Alias®, orange/ 1.6x5mm BCS (self-tapping) (3)**
6611	**Canopy, Alias®, red/ 1.6x5mm BCS (self-tapping) (3)**
6615	**Canopy, Alias®, white/ 1.6x5mm BCS (self-tapping) (3)**
6626	**Rotor blade set, black (2)/ 1.6x5mm BCS (2)**
6629	**Rotor blade set, blue (2)/ 1.6x5mm BCS (2)**
6631	**Rotor blade set, green (2)/ 1.6x5mm BCS (2)**
6630	**Rotor blade set, orange (2)/ 1.6x5mm BCS (2)**
6628	**Rotor blade set, red (2)/ 1.6x5mm BCS (2)**
6627	**Rotor blade set, white (2)/ 1.6x5mm BCS (2)**

Hardware

6642	Bearings, 3x6x2mm (8)
6649	Feet, non-skid (4)
6643	Screws, 1.6x5mm button-head machine (hex drive) (6)
6644	Screws, 1.6x5mm button-head, self-tapping (hex drive) (6)

LED Lenses

6649	Feet, non-skid (4)
6652	**LED lens, blue (4)**
6650	**LED lens, clear (4)**
6654	**LED lens, green (4)**
6653	**LED lens, orange (4)**
6651	**LED lens, red (4)**
6656	Lens, LED light bar/ LED housing

Main Frame & LED Light Pipes

6655	**LED light bar, Alias®/ harness (7 clear lights)/ 1.6x5mm BCS (self-tapping) (2)**
6623X	**Main frame (black chrome)/ 1.6x5mm BCS (self-tapping) (4)**
6623	Main frame (black)/ 1.6x5mm BCS (self-tapping) (4)
6623A	**Main frame (white)/ 1.6x5mm BCS (self-tapping) (4)**
6624	Main frame, lower (black) / 1.6x5mm BCS (self-tapping) (4)
6624A	**Main frame, lower (white) / 1.6x5mm BCS (self-tapping) (4)**

Main Shaft & Gears

6633	Main shaft (2)/ 1.6x5mm BCS (2)
6633X	**Main shaft, 7075-T6 aluminum, blue-anodized (4)/ 1.6x5mm BCS (4)**
6646	Spur gear, 78-tooth (2)

Motors & Electronics

6637	**Battery, LaTrax®, 650mAh, LiPo**
6638	**Charger, USB, dual-port (high output)**
6636	Motor, clockwise (high output, red connector) (1)
6634	Motor, clockwise (high output, red connector) (2)/ motor, counter-clockwise (high output, black connector) (2)
6635	Motor, counter-clockwise (high output, black connector) (1)
6639	Transmitter, 2.4GHz, 6-channel

Radio System, Batteries & Chargers

6641	Battery door, transmitter
6637	**Battery, LaTrax®, 650mAh, LiPo**
6638	**Charger, USB, dual-port (high output)**
6640	Gimbals, transmitter (levers (2), pads (2))
6639	Transmitter, 2.4GHz, 6-channel

Ready-to-Fly & EZ-Connect Models

6608	LaTrax® Alias®: Quad Rotor Helicopter

If you have questions or need technical assistance, call Traxxas at:

1-888-TRAXXAS

(1-888-872-9927) (U.S. residents only)

For orders, calls outside the U.S., and other information, call 972-549-3000, or fax to 972-549-3011 e-mail Traxxas at support@Traxxas.com

TRAXXAS.COM

RALLY

1/18 Scale 4WD Rally Car



MODEL 75054-5

FEATURES



2.4GHz Radio System



Fully Independent Suspension



6-Volt battery pack and charger

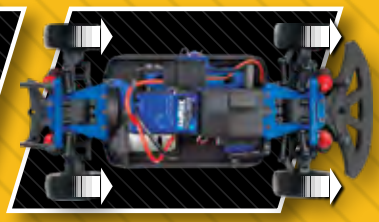

4-Wheel Drive Traction

Built To Last, All-Weather Fun!

The LaTrax 1/18 Rally incorporates the precision and performance of hobby-class radio control into a compact and incredibly affordable model that is easy to take along anywhere and is ready for fun in an instant. The LaTrax Rally is fully assembled and Ready-to-Run, with everything you need included in the package. The powerful motor, all-wheel drive, and fully independent suspension immediately transform the ground beneath your feet into a race track. Offices, malls, sidewalks, and playgrounds are the site for your next racing challenge. Long run times and the dependable 2.4GHz radio system extend your playtime. LaTrax products are built to last, protected by world-class Traxxas support, 100% parts availability, and the Traxxas Lifetime Electronics Warranty.


POWERED BY
TRAXXAS
Patents Pending

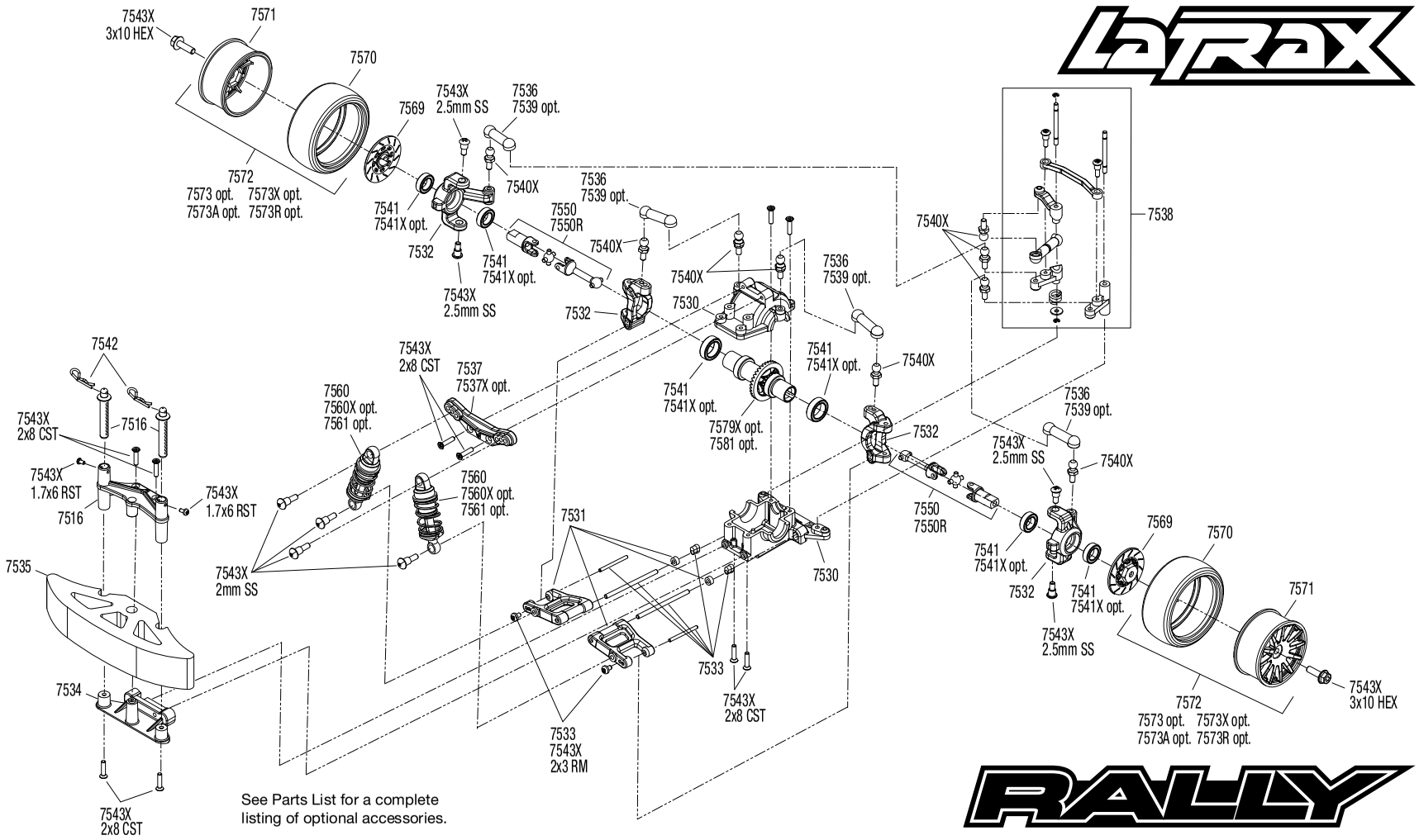

Specifications on this page are subject to change without notice. Every attempt has been made to ensure the accuracy of this drawing; however, LaTrax cannot be held responsible for typographical or other errors.

See Parts List for a complete listing of optional accessories.

REV 200306-R04

Front Assembly
Model 75054-5

RALLY

Chassis Assembly
Model 75054-5

LaTrax

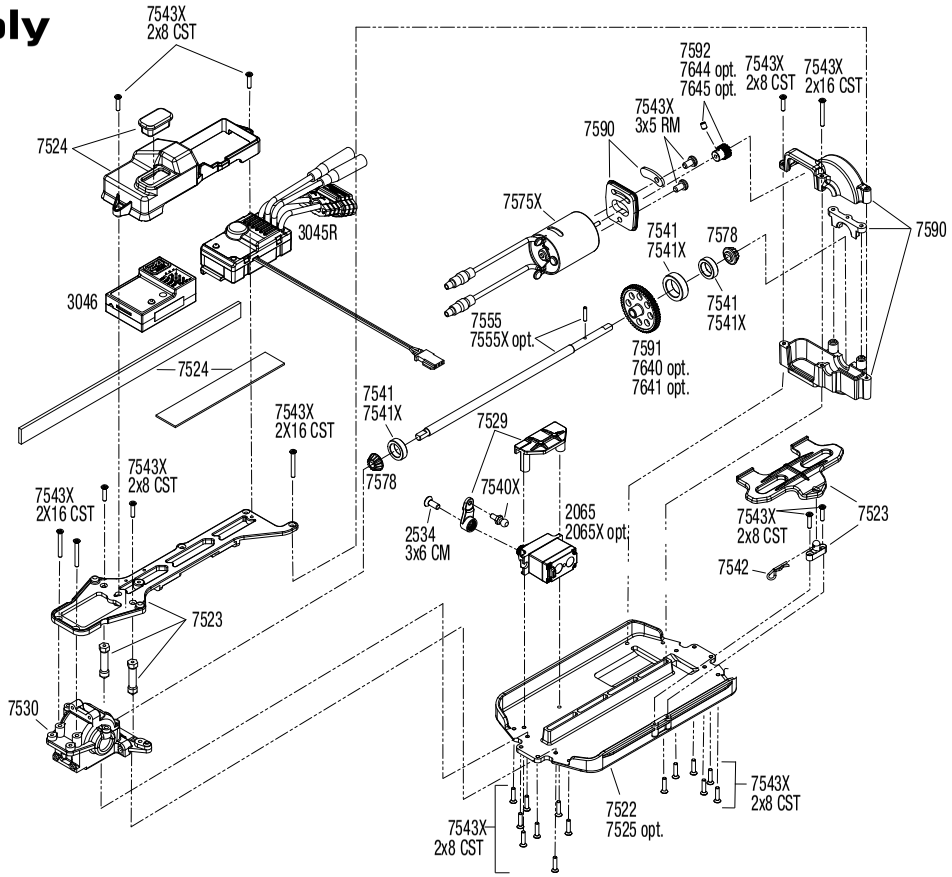

REV 200306-R04

See Parts List for a complete listing of optional accessories.

Specifications on this page are subject to change without notice. Every attempt has been made to ensure the accuracy of this drawing; however, LaTrax cannot be held responsible for typographical or other errors.

1/18 Scale 4WD Rally Car

RALLY

www.latrax.com | 1-888-TRAXXAS

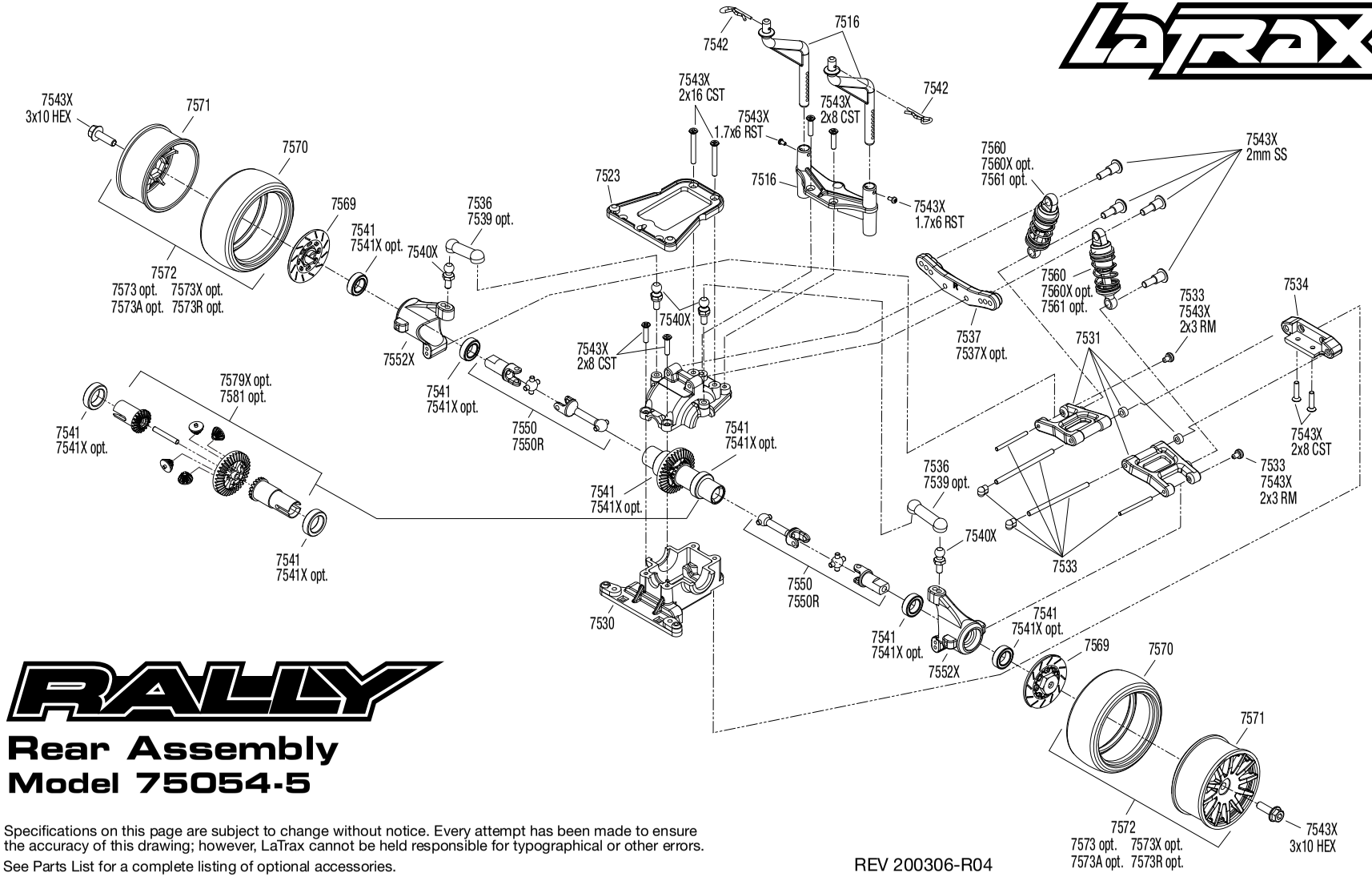

Rear Assembly
Model 75054-5

Specifications on this page are subject to change without notice. Every attempt has been made to ensure the accuracy of this drawing; however, LaTrax cannot be held responsible for typographical or other errors.

See Parts List for a complete listing of optional accessories.

REV 200306-R04

RALLY

PARTS SHOWN IN BOLD ARE OPTIONAL ACCESSORIES.

Part categories and individual part listings are arranged alphabetically.
Prices are shown in US Dollars.

Bearings & Bushings

7541X Bearings: 4x8mm (2), 6x10mm (8), 8x12mm (5)

Body & Accessories

7516 Body mounts, front & rear / body mount posts, front & rear
7511 Body, LaTrax® 1/18 Rally (clear, requires painting)/ decals
7514 Body, LaTrax® 1/18 Rally, blue (painted)/ decals
7513 Body, LaTrax® 1/18 Rally, green (painted)/ decals
7517 Body, LaTrax® 1/18 Rally, orange (painted)/ decals
7515 Body, LaTrax® 1/18 Rally, red (painted)/ decals
7512 Body, LaTrax® 1/18 Rally, yellow (painted)/ decals

Bumpers & Skidplates

7535 Body bumper, foam
7534 Suspension pin retainer, front & rear

Chassis & Attachments

7535 Body bumper, foam
7516 Body mounts, front & rear / body mount posts, front & rear
7524 Box, receiver/ ESC mount/ rubber plug/ adhesive foam tape (2)
7530 Bulkhead, front & rear / differential housing, front & rear
7525 Carbon fiber conversion kit (includes chassis, upper chassis, battery hold down, adhesive foam tape, hardware)
7522 Chassis
7529 Servo mount/ servo horn
7537 Shock towers, front & rear
7537X Shock towers, front & rear, 6061-T6 aluminum (blue-anodized)
7523 Upper chassis/ battery hold down

Differential Components

7579X Gear set, differential, metal (output gears (2)/ spider gears (4)/ ring gear, 35T (1)/ 2x14.8mm pin (1))
7578 Pinion gear, differential (2)
7581 Spool (solid axle), 6061-T6 aluminum (blue-anodized)

Driveline Components

7536 Camber links (4)/ toe links (2)
7552X Carriers, stub axle (2)
7532 Caster blocks (c-hubs) (2)/ steering block (2)
7550 Driveshaft assembly, front & rear (4)
7550R Driveshaft assembly, front/rear, 6061-T6 aluminum (blue-anodized) (2)
7555X Driveshaft, center (one-way)
7555 Driveshaft, center, aluminum / pin
7569 Wheel hubs, hex (disc brake rotors) (4)

Front Suspension

7530 Bulkhead, front & rear / differential housing, front & rear
7536 Camber links (4)/ toe links (2)
7539 Camber rods, 2-degree/3-degree (6 each)
7532 Caster blocks (c-hubs) (2)/ steering block (2)
7540X Pivot balls: black (6), silver (2), black (long) (2)
7537 Shock towers, front & rear
7537X Shock towers, front & rear, 6061-T6 aluminum (blue-anodized)
7531 Suspension arms, front & rear (4)
7534 Suspension pin retainer, front & rear
7533 Suspension pin set, complete (front & rear) / hardware

Hardware

7541X Bearings: 4x8mm (2), 6x10mm (8), 8x12mm (5)
7542 Body clips (12)
7540X Pivot balls: black (6), silver (2), black (long) (2)
7543X Screw set, complete
7533 Suspension pin set, complete (front & rear) / hardware

Motors & Electronics

2064 Gear set (for 2065 waterproof sub-micro servo)
2064X Gear set, metal (for 2065X waterproof sub-micro servo)
7575X Motor, 370 (28-turn) (assembled with bullet connectors)
3046 Receiver, LaTrax® micro, 2.4GHz (3-channel)
2063 Servo case/gaskets (for 2065 waterproof sub-micro servo)
2063X Servo case/gaskets (for 2065X metal gear, waterproof, sub-micro servo)
2065 Servo, sub-micro, waterproof
2065X Servo, sub-micro, waterproof, metal gear

Radio System, Batteries & Chargers

2976 AC to DC converter, 40W
2943 Battery charge indicators (green (4), blue (4), grey (4))
2914 Battery, Power Cell AA Alkaline (4)
2925X Battery, Series 1 Power Cell, 1200mAh (NiMH, 6-C flat, 7.2V, 2/3A)
7524 Box, receiver/ ESC mount/ rubber plug/ adhesive foam tape (2)
2969 Charger, AC, 2 amp NiMH peak detecting (5-7 cell, 6.0-8.4 volt, NiMH only)
7521R Charger, AC, 350 mAh (5 cell, NiMH)
2974 Charger, DC, 2 amp (5 - 7 cell, 6.0 - 8.4 volt, NiMH)
2064 Gear set (for 2065 waterproof sub-micro servo)
2064X Gear set, metal (for 2065X waterproof sub-micro servo)
3046 Receiver, LaTrax® micro, 2.4GHz (3-channel)
2063 Servo case/gaskets (for 2065 waterproof sub-micro servo)
2063X Servo case/gaskets (for 2065X metal gear, waterproof, sub-micro servo)
2065 Servo, sub-micro, waterproof
2065X Servo, sub-micro, waterproof, metal gear
3047 Transmitter, LaTrax®, 2.4GHz, 2-channel (transmitter only)

Ready-To-Race Model

75054-5 LaTrax® Rally: 1/18 Scale 4WD Electric Rally Racer

Rear Suspension

7530 Bulkhead, front & rear / differential housing, front & rear
7536 Camber links (4)/ toe links (2)
7552X Carriers, stub axle (2)
7540X Pivot balls: black (6), silver (2), black (long) (2)
7537 Shock towers, front & rear
7537X Shock towers, front & rear, 6061-T6 aluminum (blue-anodized)
7531 Suspension arms, front & rear (4)
7534 Suspension pin retainer, front & rear
7533 Suspension pin set, complete (front & rear) / hardware

Shocks (GTR)

7540X Pivot balls: black (6), silver (2), black (long) (2)
7560X Shocks, aluminum (blue-anodized) (assembled with springs) (4)
7561 Shocks, oil-filled (assembled with springs) (4)
7560 Shocks, oil-less (assembled with springs) (4)

Spur Gears & Pinion Gears

7645 Gear, 10-T pinion / set screw
7592 Gear, 14-T pinion / set screw
7644 Gear, 9-T pinion/ set screw
7591 Spur gear, 54-tooth
7640 Spur gear, 60-tooth
7641 Spur gear, 61-tooth

Steering Components

7538X Steering bellcranks, servo saver/ spring/ spring retainer/ posts/ draglink

Tires & Wheels

7573A Tires & wheels, assembled, glued (12-spoke black chrome wheels, slick tires) (2)
7573R Tires & wheels, assembled, glued (12-spoke blue chrome wheels, slick tires) (2)
7573 Tires & wheels, assembled, glued (12-spoke chrome wheels, slick tires) (2)
7573X Tires & wheels, assembled, glued (12-spoke red chrome wheels, slick tires) (2)
7572 Tires & wheels, assembled, glued (12-spoke white wheels, slick tires) (2)
7570 Tires, slick (2)
7569 Wheel hubs, hex (disc brake rotors) (4)
7571 Wheels, 12-spoke (white) (2)

Transmission Components

7592 Gear, 14-T pinion / set screw
7591 Spur gear, 54-tooth

If you have questions or need technical assistance, call Traxxas at:

1-888-TRAXXAS

(1-888-872-9927) (U.S. residents only)

For orders, calls outside the U.S., and other information, call 972-549-3000, or fax to 972-549-3011 e-mail Traxxas at support@Traxxas.com

TRAXXAS.COM

DESERT PRERUNNER

1/18 Scale 4WD Stadium Truck



FEATURES



2.4GHz Radio System



Batteries Included



Oil-Filled Shocks

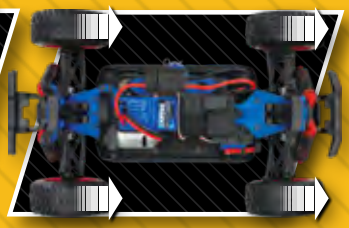

4-Wheel Drive

Scale Realism and Go-Anywhere Fun!

The LaTrax Desert PreRunner takes the fun of desert Truck racing and packs it into a convenient, take-anywhere, 1/18 scale size. Equipped with a powerful motor, independent suspension, and 4-wheel drive, the SST is Ready-To-Race® right out of the box. A waterproof power system opens the door for all-weather driving excitement year round. Oil-filled shocks soak up the bumps and jumps, and provide smooth suspension movement over any terrain. Ball bearings combined with an efficient drivetrain and power system translate to smooth running and longer runtimes, while providing aggressive acceleration and exciting speed.


LaTRAX
POWERED BY
TRAXXAS
Patents Pending

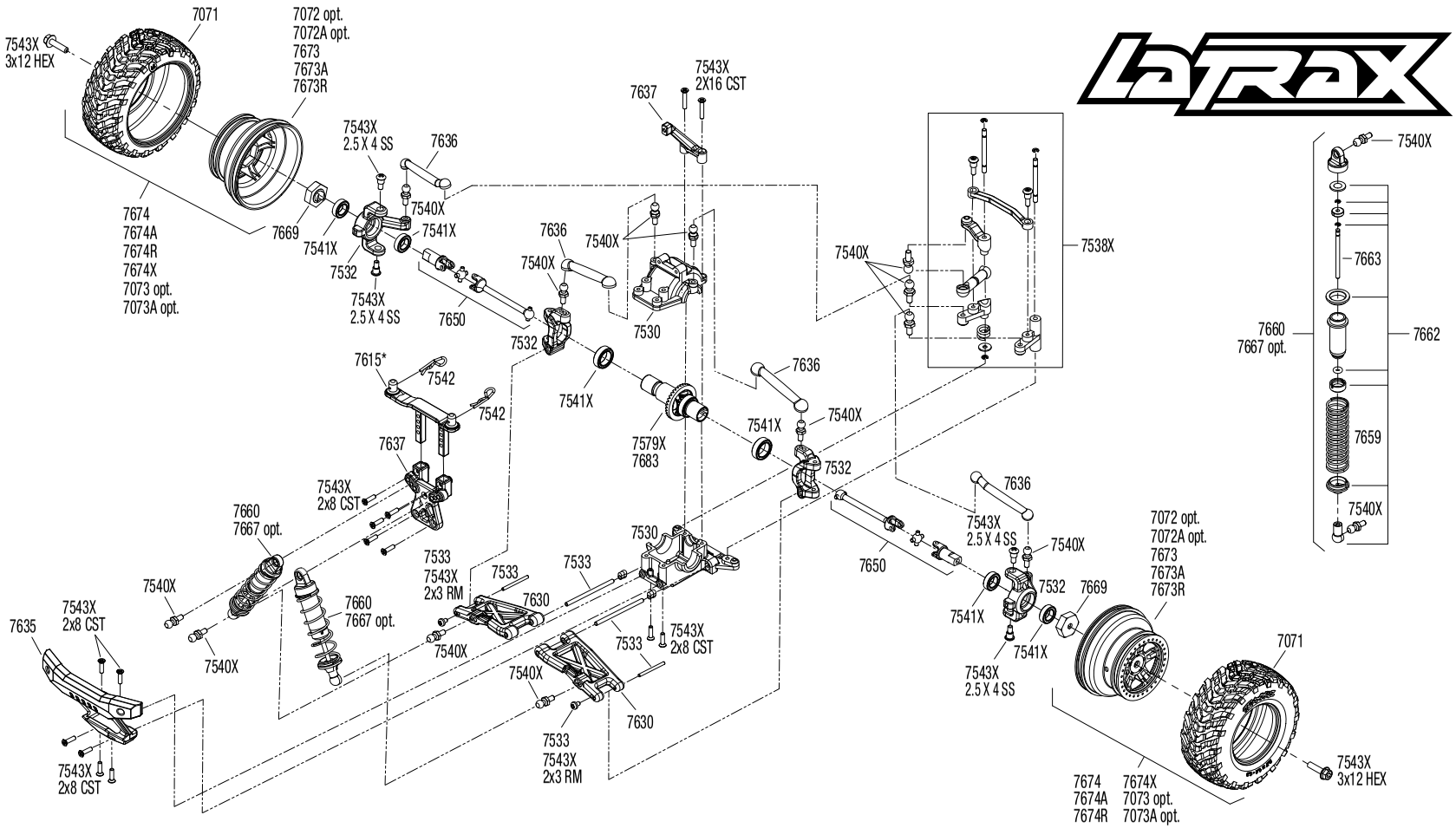

DESERT PRERUNNER

Front Assembly
Model 76064-5

*2 required (one each, front & rear)

Specifications on this page are subject to change without notice. Every attempt has been made to ensure the accuracy of this drawing; however, LaTrax cannot be held responsible for typographical or other errors.

See Parts List for a complete listing of optional accessories.

REV 190830-R05

DESERT PRERUNNER

Chassis Assembly
Model 76064-5

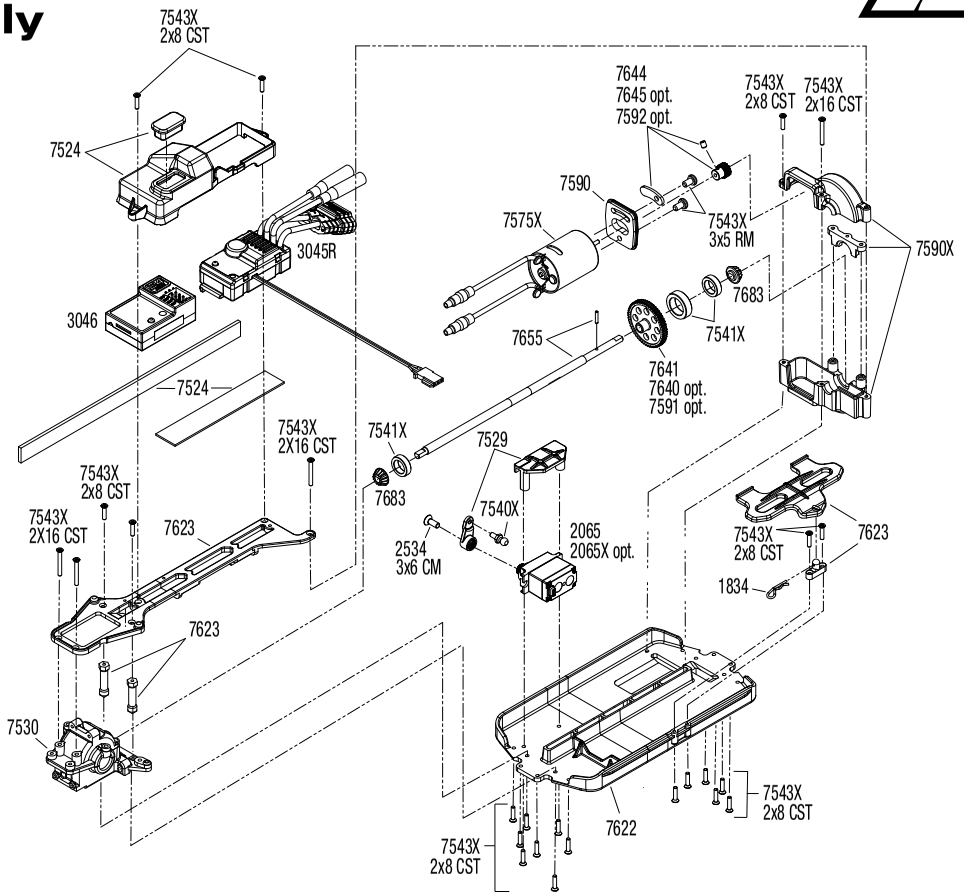

REV 190830-R05

See Parts List for a complete listing of optional accessories.

Specifications on this page are subject to change without notice. Every attempt has been made to ensure the accuracy of this drawing; however, LaTrax cannot be held responsible for typographical or other errors.

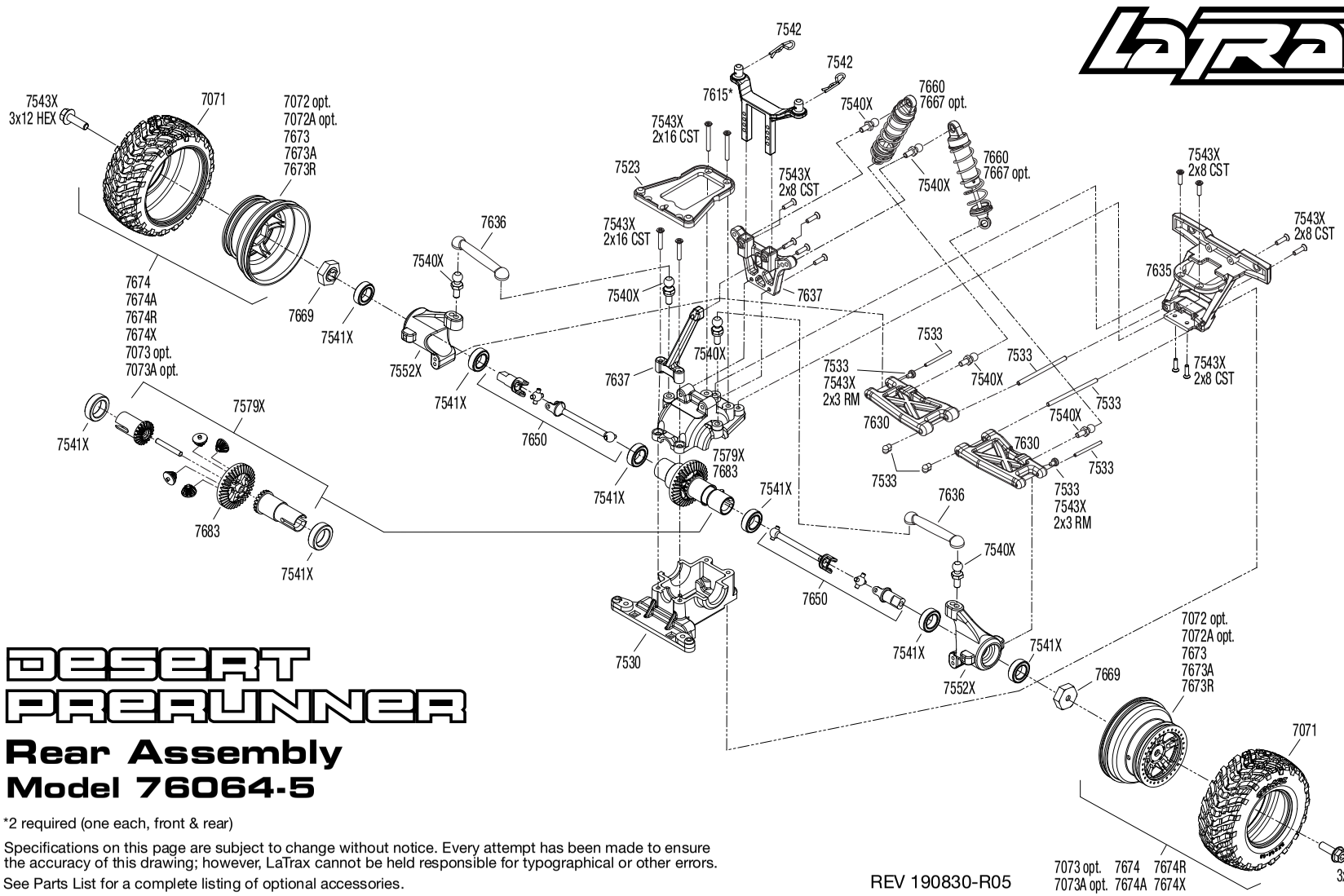

DESERT PRERUNNER

Rear Assembly

Model 76064-5

*2 required (one each, front & rear)

Specifications on this page are subject to change without notice. Every attempt has been made to ensure the accuracy of this drawing; however, LaTrax cannot be held responsible for typographical or other errors.

See Parts List for a complete listing of optional accessories.

REV 190830-R05

DESERT PRERUNNER

PARTS SHOWN IN BOLD ARE OPTIONAL ACCESSORIES.

Part categories and individual part listings are arranged alphabetically.
Prices are shown in US Dollars.

Bearings & Bushings

7541X Bearings: 4x8mm (2), 6x10mm (8), 8x12mm (5)

Body & Accessories

7615 Body mounts (posts), front & rear
7616 Body, LaTrax® Desert Prerunner (clear, requires painting)/ decals
7620 Body, LaTrax® Desert PreRunner, color burst (painted)/ decals

Bumpers & Skidplates

7635 Bumper, front (1)/ rear (1)

Chassis & Attachments

7615 Body mounts (posts), front & rear
7524 Box, receiver/ ESC mount/ rubber plug/ adhesive foam tape (2)
7530 Bulkhead, front & rear / differential housing, front & rear
7622 Chassis (long)
7529 Servo mount/ servo horn
7637 Shock tower, front (1), rear (1)/ shock tower brace (2)
7630 Suspension arms, front or rear (2)
7623 Upper chassis (long)/ battery hold down

Differential Components

7579X Gear set, differential, metal (output gears (2)/ spider gears (4)/ ring gear, 35T (1)/ 2x14.8mm pin (1))
7683 Ring gear, differential/ pinion gear, differential (metal)

Driveline Components

7636 Camber links (4)/ toe links (2)
7552X Carriers, stub axle (2)
7532 Caster blocks (c-hubs) (2)/ steering block (2)
7650R Driveshaft assembly, front & rear, 6061-T6 aluminum (blue-anodized) (2)
7650 Driveshaft assembly, front /rear (2)
7655 Driveshaft, center (long), aluminum/ pin

Front Suspension

7530 Bulkhead, front & rear / differential housing, front & rear
7636 Camber links (4)/ toe links (2)
7532 Caster blocks (c-hubs) (2)/ steering block (2)
7540X Pivot balls: black (6), silver (2), black (long) (2)
7637 Shock tower, front (1), rear (1)/ shock tower brace (2)
7630 Suspension arms, front or rear (2)
7533 Suspension pin set, complete (front & rear) / hardware
7669 Wheel hubs, hex (4)

Hardware

7541X Bearings: 4x8mm (2), 6x10mm (8), 8x12mm (5)
7542 Body clips (12)
7540X Pivot balls: black (6), silver (2), black (long) (2)
7543X Screw set, complete
7533 Suspension pin set, complete (front & rear) / hardware
7669 Wheel hubs, hex (4)

Motors & Electronics

3045R Electronic Speed Control, LaTrax®, waterproof (assembled with bullet connectors)
2064 Gear set (for 2065 waterproof sub-micro servo)
2064X Gear set, metal (for 2065X waterproof sub-micro servo)
7575X Motor, 370 (28-turn) (assembled with bullet connectors)
3046 Receiver, LaTrax® micro, 2.4GHz (3-channel)
2063 Servo case/gaskets (for 2065 waterproof sub-micro servo)
2063X Servo case/gaskets (for 2065X metal gear, waterproof, sub-micro servo)
2065 Servo, sub-micro, waterproof
2065X Servo, sub-micro, waterproof, metal gear

Radio System, Batteries & Chargers

2976 AC to DC converter, 40W
2943 Battery charge indicators (green (4), blue (4), grey (4))
2914 Battery, Power Cell AA Alkaline (4)
2925X Battery, Series 1 Power Cell, 1200mAh (NiMH, 6-C flat, 7.2V, 2/3A)
7524 Box, receiver/ ESC mount/ rubber plug/ adhesive foam tape (2)
2969 Charger, AC, 2 amp NiMH peak detecting (5-7 cell, 6.0-8.4 volt, NiMH only)
2921R Charger, AC, 350 mAh (6 cell, NiMH)
2974 Charger, DC, 2 amp (5 - 7 cell, 6.0 - 8.4 volt, NiMH)
2064 Gear set (for 2065 waterproof sub-micro servo)
2064X Gear set, metal (for 2065X waterproof sub-micro servo)
3046 Receiver, LaTrax® micro, 2.4GHz (3-channel)
2063 Servo case/gaskets (for 2065 waterproof sub-micro servo)
2063X Servo case/gaskets (for 2065X metal gear, waterproof, sub-micro servo)
2065 Servo, sub-micro, waterproof
2065X Servo, sub-micro, waterproof, metal gear
3047 Transmitter, LaTrax®, 2.4GHz, 2-channel (transmitter only)

Ready-To-Race Model

76064-5 LaTrax® Desert Prerunner: 1/18-Scale 4WD Electric Truck

Rear Suspension

7530 Bulkhead, front & rear / differential housing, front & rear
7636 Camber links (4)/ toe links (2)
7552X Carriers, stub axle (2)
7540X Pivot balls: black (6), silver (2), black (long) (2)
7637 Shock tower, front (1), rear (1)/ shock tower brace (2)
7630 Suspension arms, front or rear (2)
7533 Suspension pin set, complete (front & rear) / hardware

Shocks

7065 Caps and spring retainers, GTR shock (upper cap (2)/ hollow balls (4)/ bottom cap (2)/ upper retainer (2)/ lower retainer (2))
7540X Pivot balls: black (6), silver (2), black (long) (2)
7062 Rebuild kit, GTR composite shocks (x-rings, bladders, pistons, e-clips, shock rod ends, hollow balls) (renews 2 shocks)
7662 Rebuild kit, oil-filled shocks (o-ring, bladder, piston, shaft guide, E-clips, shock cap, shock rod end) renews 2 shocks
7663 Shock shafts, steel, chrome finish (2)
7665 Shocks, GTR hard-anodized, PTFE-coated aluminum with TiN shafts (fully assembled w/ springs) (4) / 2.5x10mm CS (8) (standard SST spring rate requires #7667 shock springs)
7660 Shocks, oil-filled (assembled with springs) (2)

Springs

7667 Spring, shock (red) (GTR) (0.412 rate)
7659 Spring, shock, firm (1 pair)

Spur Gears & Pinion Gears

7645 Gear, 10-T pinion / set screw
7592 Gear, 14-T pinion / set screw
7644 Gear, 9-T pinion/ set screw
7591 Spur gear, 54-tooth
7640 Spur gear, 60-tooth
7641 Spur gear, 61-tooth

Steering Components

7538X Steering bellcranks, servo saver/ spring/ spring retainer/ posts/ draglink

Tires & Wheels

7674 Tires and wheels, assembled, glued (SCT blue wheels, SCT off-road racing tires) (1 each, right & left)
7674A Tires and wheels, assembled, glued (SCT orange wheels, SCT off-road racing tires) (1 each, right & left)
7674R Tires and wheels, assembled, glued (SCT red wheels, SCT off-road racing tires) (1 each, right & left)
7073A Tires and wheels, assembled, glued (SCT satin chrome wheels, red beadlock style, SCT off-road racing tires, foam inserts) (1 each, right & left)
7073 Tires and wheels, assembled, glued (SCT satin chrome wheels, SCT off-road racing tires, foam inserts) (1 each, right & left)
7674X Tires and wheels, assembled, glued (SCT white wheels, SCT off-road racing tires) (1 each, right & left)
7071 Tires, off-road racing, SCT dual profile (1 each, right & left)/ foam inserts (2)
7669 Wheel hubs, hex (4)
7668 Wheel nut washer, machined aluminum, blue / 3x12mm CS (4)
7668G Wheel nut washer, machined aluminum, green / 3x12mm CS (4)
7668X Wheel nut washer, machined aluminum, orange / 3x12mm CS (4)
7668R Wheel nut washer, machined aluminum, red / 3x12mm CS (4)
7673 Wheels, SCT blue, beadlock style, dual profile (1.8" inner, 1.4" outer) (2)
7673A Wheels, SCT orange, beadlock style, dual profile (1.8" inner, 1.4" outer) (2)
7673R Wheels, SCT red, beadlock style, dual profile (1.8" inner, 1.4" outer) (2)
7072 Wheels, SCT satin chrome, beadlock style, dual profile (1.8" inner, 1.4" outer) (2)
7072A Wheels, SCT satin chrome, red beadlock style, dual profile (1.8" inner, 1.4" outer) (2)

Transmission Components

7645	**Gear, 10-T pinion / set screw**
7644	Gear, 9-T pinion/ set screw
7590X	Gearbox housing/ motor plate
7640	**Spur gear, 60-tooth**
7641	Spur gear, 61-tooth

If you have questions or need technical assistance, call Traxxas at:

1-888-TRAXXAS

(1-888-872-9927) (U.S. residents only)

For orders, calls outside the U.S., and other information, call 972-549-3000, or fax to 972-549-3011 e-mail Traxxas at support@Traxxas.com

TRAXXAS.COM

REV. 200803 1646

POWERED BY TRAXXAS

Patents Pending

TETON

1/18 Scale 4WD Stadium Truck



MODEL 76054-5

FEATURES



2.4GHz Radio System



Batteries Included



Oil-Filled Shocks

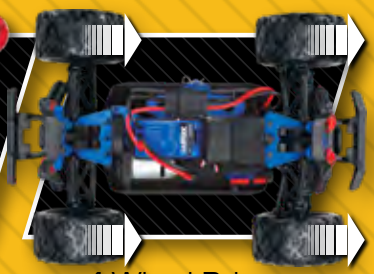

4-Wheel Drive

4-Wheel Drive Off-Road Versatility!

The Teton™ packs big all-weather adventure into a powerful 4-wheel drive off-roader that's quick and versatile for radio-controlled fun anytime, anywhere. This tough rig checks in at 1/18 scale, yet its purposeful design easily tackles rugged back-road terrain. The steep approach angle lets the grippy tires attack large rocks and tall curbs with aggressive climbing action. Smooth, long-travel oil-filled shocks keep the suspension motion in check over rocky terrain, and smooths out the landings when coming off of big jumps. Strength on the trail is assured with proven shaft drive, metal ring and pinions in the differentials, and smooth, long wearing ball bearings. Roosting dirt and slinging gravel are just part of the fun as the fully proportional electronic speed control and powerful motor deliver punchy acceleration and exciting speed.


LaTRAX
POWERED BY
TRAXXAS
Patents Pending

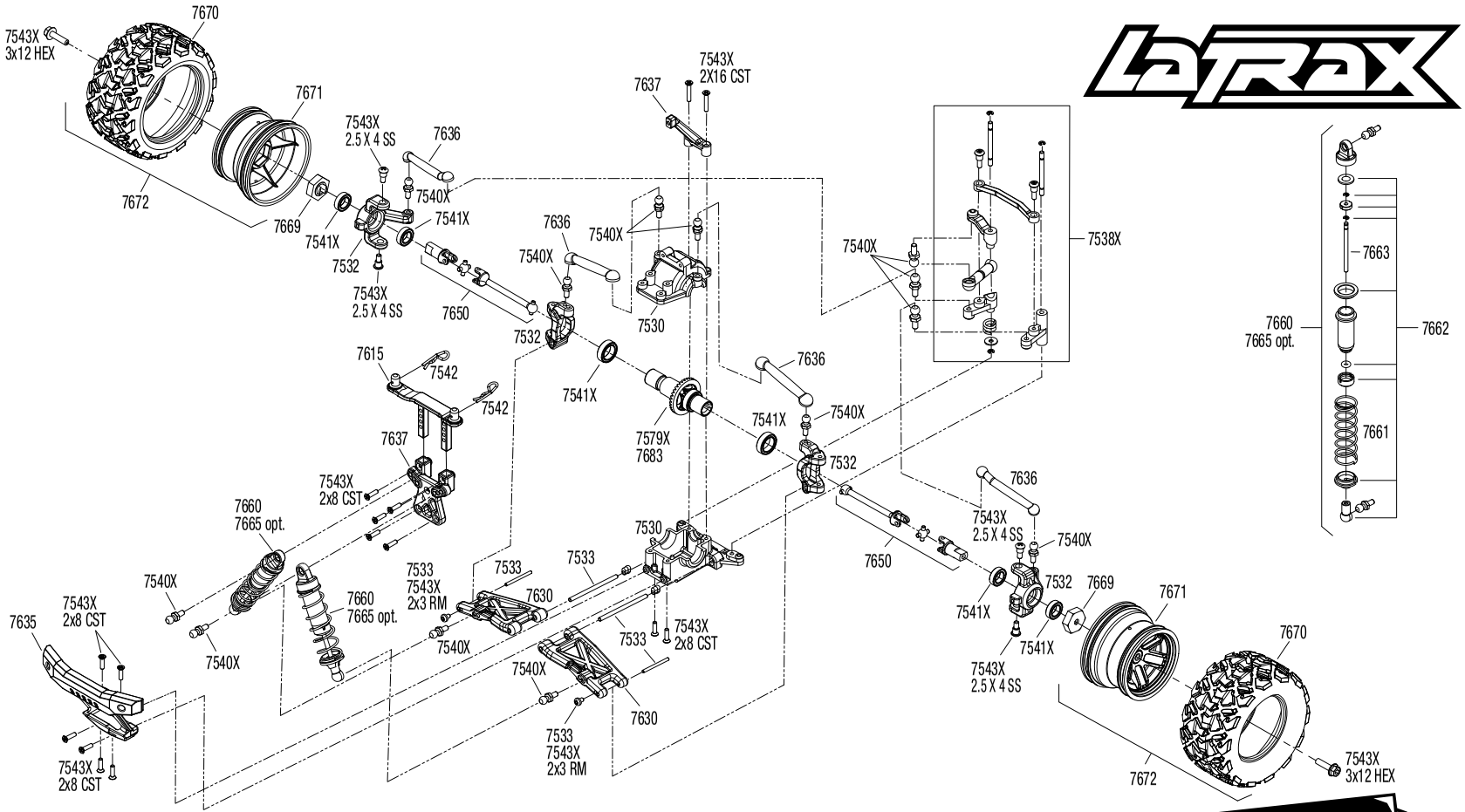

TETON

Front Assembly
Model 76054-5

Specifications on this page are subject to change without notice. Every attempt has been made to ensure the accuracy of this drawing; however, LaTrax cannot be held responsible for typographical or other errors.

See Parts List for a complete listing of optional accessories.

REV 190304-R03

TETON

Chassis Assembly
Model 76054-5

LaTrax

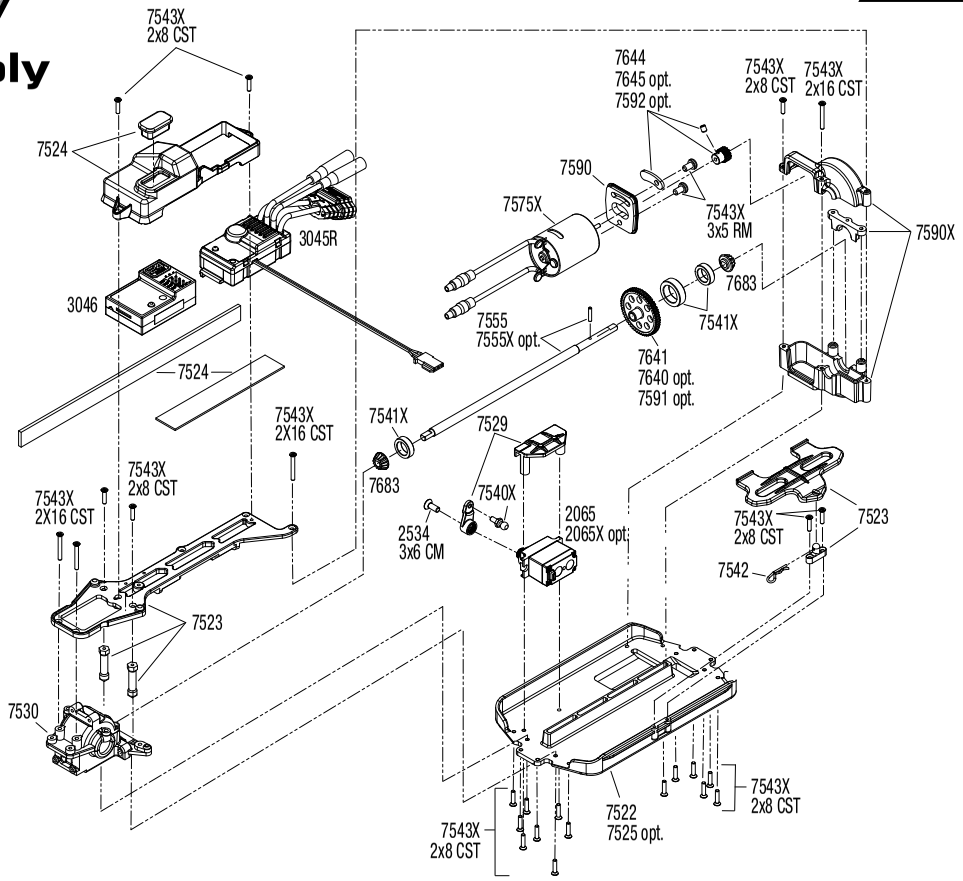

REV 190304-R03

See Parts List for a complete listing of optional accessories.

Specifications on this page are subject to change without notice. Every attempt has been made to ensure the accuracy of this drawing; however, LaTrax cannot be held responsible for typographical or other errors.

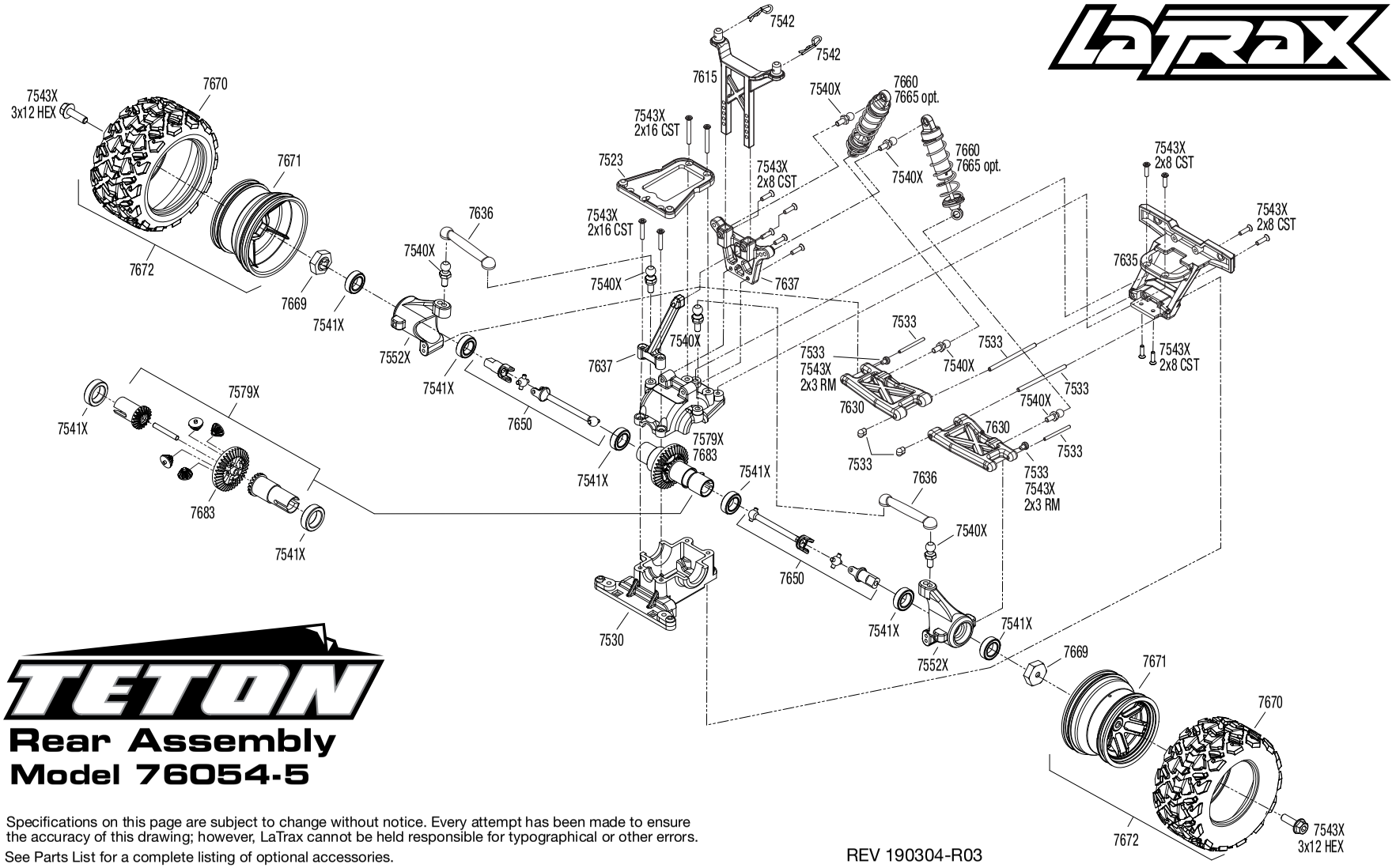

Rear Assembly
Model 76054-5

Specifications on this page are subject to change without notice. Every attempt has been made to ensure the accuracy of this drawing; however, LaTrax cannot be held responsible for typographical or other errors.

See Parts List for a complete listing of optional accessories.

REV 190304-R03

TETON

PARTS SHOWN IN BOLD ARE OPTIONAL ACCESSORIES.

Part categories and individual part listings are arranged alphabetically.
Prices are shown in US Dollars.

Bearings & Bushings

7541X	Bearings: 4x8mm (2), 6x10mm (8), 8x12mm (5)

Body & Accessories

7615	Body mounts (posts), front & rear
7611	**Body, LaTrax® 1/18 Teton, (clear, requires painting)/ decal sheet**

Bumpers & Skidplates

7635	Bumper, front (1)/ rear (1)

Chassis & Attachments

7615	Body mounts (posts), front & rear
7524	Box, receiver/ ESC mount/ rubber plug/ adhesive foam tape (2)
7530	Bulkhead, front & rear / differential housing, front & rear
7525	**Carbon fiber conversion kit (includes chassis, upper chassis, battery hold down, adhesive foam tape, hardware)**
7522	Chassis
7529	Servo mount/ servo horn
7637	Shock tower, front (1), rear (1)/ shock tower brace (2)
7630	Suspension arms, front or rear (2)
7523	Upper chassis/ battery hold down

Differential Components

7579X	Gear set, differential, metal (output gears (2)/ spider gears (4)/ ring gear, 35T (1)/ 2x14.8mm pin (1))
7683	Ring gear, differential/ pinion gear, differential (metal)

Driveline Components

7636	Camber links (4)/ toe links (2)
7552X	Carriers, stub axle (2)
7532	Caster blocks (c-hubs) (2)/ steering block (2)
7650R	**Driveshaft assembly, front & rear, 6061-T6 aluminum (blue-anodized) (2)**
7650	Driveshaft assembly, front /rear (2)
7555X	**Driveshaft, center (one-way)**
7555	Driveshaft, center, aluminum / pin

Front Suspension

7530	Bulkhead, front & rear / differential housing, front & rear
7636	Camber links (4)/ toe links (2)
7532	Caster blocks (c-hubs) (2)/ steering block (2)
7540X	Pivot balls: black (6), silver (2), black (long) (2)
7637	Shock tower, front (1), rear (1)/ shock tower brace (2)
7630	Suspension arms, front or rear (2)
7533	Suspension pin set, complete (front & rear) / hardware
7669	Wheel hubs, hex (4)

Hardware

7541X	Bearings: 4x8mm (2), 6x10mm (8), 8x12mm (5)
7542	Body clips (12)
7540X	Pivot balls: black (6), silver (2), black (long) (2)
7543X	Screw set, complete
7533	Suspension pin set, complete (front & rear) / hardware
7669	Wheel hubs, hex (4)

Motors & Electronics

3045R	Electronic Speed Control, LaTrax®, waterproof (assembled with bullet connectors)
2064	Gear set (for 2065 waterproof sub-micro servo)
2064X	**Gear set, metal (for 2065X waterproof sub-micro servo)**
7575X	Motor, 370 (28-turn) (assembled with bullet connectors)
3046	Receiver, LaTrax® micro, 2.4GHz (3-channel)
2063	Servo case/gaskets (for 2065 waterproof sub-micro servo)
2063X	**Servo case/gaskets (for 2065X metal gear, waterproof, sub-micro servo)**
2065	Servo, sub-micro, waterproof
2065X	**Servo, sub-micro, waterproof, metal gear**

Radio System, Batteries & Chargers

2976	**AC to DC converter, 40W**
2943	**Battery charge indicators (green (4), blue (4), grey (4))**
2914	Battery, Power Cell AA Alkaline (4)
2925X	Battery, Series 1 Power Cell, 1200mAh (NiMH, 6-C flat, 7.2V, 2/3A)
7524	Box, receiver/ ESC mount/ rubber plug/ adhesive foam tape (2)
2969	**Charger, AC, 2 amp NiMH peak detecting (5-7 cell, 6.0-8.4 volt, NiMH only)**
2921R	Charger, AC, 350 mAh (6 cell, NiMH)
2974	**Charger, DC, 2 amp (5 - 7 cell, 6.0 - 8.4 volt, NiMH)**
2064	Gear set (for 2065 waterproof sub-micro servo)
2064X	**Gear set, metal (for 2065X waterproof sub-micro servo)**
3046	Receiver, LaTrax® micro, 2.4GHz (3-channel)
2063	Servo case/gaskets (for 2065 waterproof sub-micro servo)
2063X	**Servo case/gaskets (for 2065X metal gear, waterproof, sub-micro servo)**
2065	Servo, sub-micro, waterproof
2065X	**Servo, sub-micro, waterproof, metal gear**
3047	Transmitter, LaTrax®, 2.4GHz, 2-channel (transmitter only)

Ready-To-Race Model

76054-5	LaTrax® Teton: 1/18 Scale 4WD Electric Monster Truck

Rear Suspension

7530	Bulkhead, front & rear / differential housing, front & rear
7636	Camber links (4)/ toe links (2)
7552X	Carriers, stub axle (2)
7540X	Pivot balls: black (6), silver (2), black (long) (2)
7637	Shock tower, front (1), rear (1)/ shock tower brace (2)
7630	Suspension arms, front or rear (2)
7533	Suspension pin set, complete (front & rear) / hardware

Shocks (GTR)

7065	**Caps and spring retainers, GTR shock (upper cap (2)/ hollow balls (4)/ bottom cap (2)/ upper retainer (2)/ lower retainer (2))**
7540X	Pivot balls: black (6), silver (2), black (long) (2)
7062	**Rebuild kit, GTR composite shocks (x-rings, bladders, pistons, e-clips, shock rod ends, hollow balls) (renews 2 shocks)**
7662	Rebuild kit, oil-filled shocks (o-ring, bladder, piston, shaft guide, E-clips, shock cap, shock rod end) renews 2 shocks
7663	Shock shafts, steel, chrome finish (2)
7665	**Shocks, GTR hard-anodized, PTFE-coated aluminum bodies with TiN shafts (fully assembled w/ springs) (4) / 2.5x10mm CS (8)**
7660	Shocks, oil-filled (assembled with springs) (2)
7666	**Spring, shock (red) (GTR) (0.314 rate) (1 pair)**

Springs

7661	Spring, shock (1 pair)
7666	**Spring, shock (red) (GTR) (0.314 rate) (1 pair)**

Spur Gears & Pinion Gears

7645	**Gear, 10-T pinion / set screw**
7592	**Gear, 14-T pinion / set screw**
7644	Gear, 9-T pinion/ set screw
7591	**Spur gear, 54-tooth**
7640	**Spur gear, 60-tooth**
7641	Spur gear, 61-tooth

Steering Components

7538X	Steering bellcranks, servo saver/ spring/ spring retainer/ posts/ draglink

Tires & Wheels

7672	Tires & wheels, assembled, glued (Teton 5-spoke wheels, Teton tires) (2)
7670	Tires, Teton (2)
7669	Wheel hubs, hex (4)
7668	**Wheel nut washer, machined aluminum, blue / 3x12mm CS (4)**
7668G	**Wheel nut washer, machined aluminum, green / 3x12mm CS (4)**
7668X	**Wheel nut washer, machined aluminum, orange / 3x12mm CS (4)**
7668R	**Wheel nut washer, machined aluminum, red / 3x12mm CS (4)**
7671	Wheels, Teton (2)

Transmission Components

7645	**Gear, 10-T pinion / set screw**
7644	Gear, 9-T pinion/ set screw
7590X	Gearbox housing/ motor plate
7640	**Spur gear, 60-tooth**
7641	Spur gear, 61-tooth

If you have questions or need technical assistance, call Traxxas at:

1-888-TRAXXAS

(1-888-872-9927) (U.S. residents only)

For orders, calls outside the U.S., and other information, call 972-549-3000, or fax to 972-549-3011 e-mail Traxxas at support@Traxxas.com

TRAXXAS.COM

Radio Systems · Electronics



FEATURE-RICH TRAXXAS ELECTRONICS

From the precise, comfortable, powerful, and reliable TQi 2.4GHz Intelligent Radio System to the waterproof Velineon VXL-3S electronic speed control that simplifies brushless technology with easy, built-in profiles and intuitive programming, Traxxas models are equipped with powerful electronic systems that integrate seamlessly with each model. Traxxas was the first to offer Ready-To-Race® models with waterproof electronics and has a full line of servos, motors, and speed controls to suit any model, each proven in Traxxas' own high-performance cars, trucks, and boats. All Traxxas electronics include our exclusive Lifetime Electronics Warranty. After the expiration of the standard 30-day warranty, Traxxas will repair or replace damaged electronics for a low, flat-rate fee, no questions asked. It's Traxxas support you can count on to maintain top performance in your model.

TRAXXAS®
The Fastest Name In Radio Control®

RADIO SYSTEMS

TQi
TOP QUALIFIER

FEATURES

- Sleek 4-Channel Transmitter Design with Internal Antenna
- 5-Channel Receiver with 3 Telemetry Ports
- Traxxas Link Model Memory for up to 30 Models
- Simple 2-Button Programming Interface
- Built in Failsafe
- Direct Sequence Spread Spectrum Technology (DSSS)
- Uses only 4 AA Batteries
- Optional Traxxas Link Wireless Module Pairs TQi with Android 4.4+ or Apple iOS 4.3+ Platforms



2-Channel TQi 2.4GHz
Part #6528



4-Channel TQi 2.4GHz
Part #6530



TQi 2.4GHz
5-Channel Receiver
Part #6533

TQ
TOP QUALIFIER

FEATURES

- TQ 2.4GHz radio system
- New modern design
- Internal antenna
- Automatically locates and locks onto an open frequency
- Ergonomic grip
- Steering trim
- Channel reversing
- Throttle Fail-Safe
- Lightweight
- Requires only four AA batteries
- 2.4GHz receiver with 3 output channels and dual channel 1



2-Channel TQ 2.4GHz
Part #6516

TQ 2.4GHz
3-Channel Receiver
Part #6519

Traxxas Receiver Specifications

	Inputs	Dimensions
Part #6533 TQi 2.4GHz Micro Receiver	• 5-Channels Total • Dual Channel 1 • Shared Channel 5 & Battery • Traxxas Stability Management	1.48"x 1"x .57" (37.5 x 25.4 x 14.5mm)
Part #6518 TQi 2.4GHz Micro Receiver	• 5-Channels Total • Dual Channel 1 • Shared Channel 5 & Battery	1.48"x 1"x .57" (37.5 x 25.4 x 14.5mm)
Part #6519 TQ 2.4GHz Micro Receiver	• 3-Channels Total • Dual Channel 1 • Shared Channel 3 & Battery	1.48"x 1"x .57" (37.5 x 25.4 x 14.5mm)
Part #2218X TQ 2.4GHz Micro Receiver	• 5-Channels Total • Dual Channel 1 • Shared Channel 5 & Battery	1.48"x 1"x .61" (37.5 x 25.4 x 15.5mm)
Part #2216 27MHz AM Micro Receiver	• 4-Channels Total • Dual Channel 1 • Shared Channel 4 & Battery	1.48" x 1" x .83" (37.5 x 25.4 x 21.3mm)
Part #2215 27MHz AM Receiver	• 3-Channels • Battery	1.89" x 1.50" x 0.75" (48 x 38 x 19mm)
Part #2019 27MHz AM Receiver	• 2-Channels • Battery	2.24" x 1.42" x 0.75" (57 x 36 x 19mm)

Transmitter and Receiver Compatibility Chart

	 **Part #6516** TQ 2.4GHz 2-channel	 **Part #6517** TQ 2.4GHz 3-channel	 **Part #6528** TQi 2.4GHz 2-channel	 **Part #6530** TQi 2.4GHz 4-channel	 **Part #6509R** TQi 2.4GHz 2-channel	 **Part #6507R** TQi 2.4GHz 4-channel with Bluetooth Module
 **Part #6533** 5-Channel TQi 2.4GHz Micro Receiver w/ TSM			●	●	●	●
 **Part #6519** 3-Channel TQ 2.4GHz Micro Receiver	●	●	●	●	●	●
 **Part #6518** 5-Channel TQi 2.4GHz Micro Receiver			●	●	●	●
 **Part #2218X** 5-Channel TQ 2.4GHz Micro Receiver			●	●	●	●

6509R and 6507R include #6533 TQi receiver



Traxxas Link Wireless Module
Part #6511

Any wireless link enabled TQi transmitter can be upgraded in minutes with the Traxxas Link Wireless Module. The Wirless Module pairs with your Apple or Android smart device to experience the full capability of the Traxxas Link application

- Intuitive touch interface
- Instantly adjust steering and throttle sensitivity (expo), travel percentage (dual rate), endpoints, trim, and reversing
- See telemetry feedback for speed, temperature, and voltage with accessory telemetry sensors
- Customizable Dashboard
  - Display up to nine gauges at one time
  - Record and replay telemetry data, including sound
  - Edit, save, and share drive profiles
- Visually manage an unlimited number of models



TQi 2.4GHz (4-Channel) Transmitter with Traxxas Link Wireless Module & TSM Receiver
Part #6507R

TRAXXAS LINK™



When a model is equipped with sensors, Traxxas Link collects and records real-time telemetry data. The application automatically detects and recognizes Traxxas Link sensors for easy set up and configuration. See the next page for a complete list of available sensors and compatibility.

Intuitive smart touch Interface

- Simply touch and drag the sliders on the screen
- Instant feedback on changes
- Easy to learn, understand, and access tuning options such as:
  - Steering and throttle sensitivity
  - Steering percentage
  - Braking strength
  - Throttle trim





Edit, Save and Share Drive Profiles

- Save settings as a Drive Effect Profile
- Use saved profile on another model
- Share profile with others
- Save Drive Effects for various track conditions





Customizable Dashboard

- Either dial or digital readout gauges
- Up to nine gauges can be displayed at once
- Set threshold warnings and log maximums, minimums, or averages
- Recording function documents dashboard view with sound
- Recording allows user to watch model and not miss a single apex
- Recordings can be named, saved, and shared with others
- Using the Instant Replay function anytime captures the previous minute

Manage up to 30 Models with Traxxas Link

- Automatically keeps track of bound vehicles and what settings were used for each model
- See the transmitter's model history, name the models, customize their settings, attach profiles, and lock them into memory
- Traxxas Link and TQi store settings for up to 30 models
- Pre-programmed factory settings for all Traxxas models

Traxxas Link App is designed for use with Android 4.4 and up or iOS 4.3 and later. Traxxas Link is compatible with Android equipped devices, iPhone (4S, 5, 5C, 5S), iPod touch (5th generation and later versions), iPad (3rd generation and later versions), or iPad mini. For full functionality, Traxxas Link requires a Traxxas TQi transmitter with Traxxas Link Wireless Module and a TQi receiver installed in the model. Telemetry functions require Traxxas telemetry sensors to be installed on your model.

Available on the App Store

ANDROID APP ON Google play

Android devices sold separately. Android is a product of Google Inc.
Apple iPhone®, iPad®, and iPod touch® sold separately. iPhone, iPad, and iPod touch are trademarks of Apple Inc., registered in the U.S. and other countries.

TELEMETRY SENSORS



3977R Cover, gear (upper & lower) (1)/dust plug (1)/3x6mm CS (3)(for single motor installation, use with motor plate #3997X)



#3792 - Dust cover/rubber plug (w/screws)(telemetry ready)



#5677A - Cover, gear/ 3x8mm CS (1)



5677R Cover, gear/3x8mm CS (1)(for single motor installation, use with motor plate #5690X)



7077R - Cover, gear/motor mount hinge post/hardware



#7379R - Cover, gear (for 550 motors)/motor mount hinge post/hardware



#6860A - Motor mount (assembled with 3x6 flat-head machine screw)/3.0mm NL (1)



#5724R - Radio tray/radio tray retainer (2)/stuffing tube clamp/4x16mm BCS (stainless) (2)/4x10mm BCS (stainless)(2)



#6520 - Sensor, RPM (long)/3x4mm BCS (2)/3x4 GS (1)
#6522 - Sensor, RPM (short)/3x4mm BCS (2)



#6521 - Sensor, temperature and voltage (long)
#6523 - Sensor, temperature and voltage (short)



#6524 - Sensor, temperature & voltage (fits XO-1)



#6526 -Sensor, auto-detectable, temperature
#6527 - Sensor, auto-detectable, voltage
(For TQi Telemetry Expander #6550X only)



6541 - Connector, power tap (with cable)(long)/wire tie
6541X - Connector, power tap (with cable)(long)/wire tie
6543 - Connector, power tap (with cable)(short)/wire tie



#6536 - Mounts, RPM sensor (nitro engines)/3x10mm CS with split and flat washers (2)



#6537 - Wire retainers, gear cover/3x4mm BCS (2)



#6535 - Mount, temperature sensor (electric motors)/wire tie/ thermal pad



#6538 - Telemetry trigger magnet holders, spur gear
#6539 - Telemetry trigger magnet holder, center differential



#6542 - Flywheel with magnet (35mm)
#6542X - Flywheel (large, for use with starter boxes)



#7045R - Spur gear, 45-tooth
#7046R - Spur gear, 50-tooth
#7047R - Spur gear, 55-tooth



#6540 - Telemetry trigger magnet, 5x2mm (1)



#6550X - TQi Telemetry Expander (includes #6525)
#6525 - Communication link only



#6551X - GPS Speed Telemetry Module
(Requires TQi Telemetry Expander #6550X)



#6552 - Seal kit, expander box (includes o-ring, seals, and silicone grease)



#6554 - Mount, telemetry expander (fits Rustler, Bandit, Slash 2WD)



#6555 -Mount, telemetry expander (fits Slash 4X4, Stampede 4X4, Rally, Jato)



#6556 - Mount, telemetry expander (fits XO-1, E-Revo*, Summit*, all Maxx trucks, Revo 3.3, Slayer Pro 4X4)



#6557 - Mount, telemetry expander (fits Stampede 2WD)



#6558 - Mount, telemetry expander (fits Funny Car, Nitro 4-Tec)



#6559 - Mount, telemetry expander (fits Spartan and M41)

*Requires part #5632 chassis brace

COMPATIBILITY CHART



Adding Telemetry to any model requires a TQi transmitter with Bluetooth Module and the Traxxas Link App. **Traxxas models may have some Telemetry-ready parts installed from the factory. Please inspect the model before providing telemetry components to your customer.** Refer to the Service and Support Guide supplied with the vehicle for a comprehensive parts list and exploded parts views, and contact the Traxxas Dealer Support line at 1-888-TRAXXAS (1-888-872-9927) Ext. 350 should you require additional assistance.

	RPM Sensor	RPM Sensor Mount	Temperature and Voltage Sensor	Temperature Sensor Mount	Power Tap Connector	Telemetry GPS Module	Telemetry Expander	Telemetry Expander Mount	Auto-Detectable Temperature Sensor	Auto-Detectable Voltage Sensor
Bandit/Bandit VXL	6522	6537 /3792	6521	6535	6541	6551X	6550X	6554	6526	6527
Bigfoot #1/Bigfoot	6522	6537 /3792	6521	6535	6541	6551X	6550X	6554	6526	6527
Stampede/Stampede VXL	6522	6537 /3792	6521	6535	6541	6551X	6550X	6557	6526	6527
Rustler/Rustler VXL	6522	6537 /3792	6521	6535	6541	6551X	6550X	6554	6526	6527
E-Maxx/E-Maxx Brushless	6522	6538 /3977A (Dual Motor) /3977R (Single Motor)	6521	6535	6541	6551X	6550X	6556	6526	6527
E-Revo/E-Revo Brushless	6522	6538 /5677A (Dual Motor) /5677R (Single Motor)	6521	6535	6541	6551X	6550X	5632 /6556*	6526	6527
Summit - 56076-4	6522	6538 /5677R	6521	6535	6541	6551X	6550X	5632 /6556*	6526	6527
Slash/Slash VXL	6520	6537 /3792	6521	6535	6541	6551X	6550X	6554	6526	6527
XO-1	6520	–	–	6535	6541	6551X	6550X	6556	6526	6527
Stampede 4X4 VXL	6520	6538 /6539*** /6860A	6521	6535	6541	6551X	6550X	6555	6526	6527
Slash 4X4/Ultimate/Platinum	6520	6538 /6539*** /6860A	6521	6535	6541	6551X	6550X	6555	6526	6527
Rustler 4X4	6520	6538 /6539*** /	6521	6535	6541	6551X	6550X	–	6526	6527
Brushed 1/16 Models	6522	6540 /7379R 7045R /7046R /7047R	6523	6535	6543	–	–	–	–	–
Brushless 1/16 Models	6522	6540 /7077R 7045R /7046R /7047R	6523	6535	6543	–	–	–	–	–
Fiesta ST Rally	6520	6538 /6539*** /6860A	6521	6535	6541	6551X	6550X	6555	6526	6527
X-Maxx	–	–	6531	–	6541	6551X	6550X	–	6526	6527
TRX-4	–	–	6521	6535	6541	6551X	6550X	–	6526	6527
4-Tec 2.0/ Ford GT/ Ford Mustang GT	–	–	6523	6535	6541	6551X	6550X	–	6526	6527
Nitro Stampede	6520	6536 /6542	6521	–	–	–	–	–	–	–
Nitro Rustler	6520	6536 /6542	6521	–	–	–	–	–	–	–
Nitro Slash	6520	6536 /6542	6521	–	–	6551X	6550X	**	6526	6527
Nitro Sport	6520	6536 /6542	6521	–	–	–	–	–	–	–
T-Maxx 3.3	6520	6536 /6542	6521	–	–	6551X	6550X	6556	6526	6527
T-Maxx Classic	6520	6536 /6542	6521	–	–	6551X	6550X	6556	6526	6527
Revo 3.3	6522	6536 /6542	6521	–	–	6551X	6550X	6556	6526	6527
Jato 3.3	6522	6536 /6542	6521	–	–	6551X	6550X	6555	6526	6527
Slayer Pro 4X4	6522	6536 /6542	6521	–	–	6551X	6550X	6556	6526	6527
Spartan	6520	5724R/6537	6521	6535	6541	6551X	6550X	6559	6526	6527
DCB M41	6520	5724R	6521	6535	6541	6551X	6550X	6559	6526	6527
Blast	6520	5724R	6521	6535	6541	6551	6550	6559	6526	6527

*Requires part #5632 chassis brace
**The Telemetry Expander (#6550) mounts directly to the fuel tank for the Nitro Slash. There is not a separate Telemetry Expander Mount.
***For vehicles with center differential
NOTE: Some components listed may be stock on newer models.

POWER SYSTEMS

Velineon™ is the only name you need to know to achieve the tire-melting horsepower and supercharged speed you expect from brushless. The key to the Velineon's extreme power output is total system optimization. All of the components are carefully engineered to work seamlessly together.

VXL-3S ELECTRONIC SPEED CONTROL #3355R



- Waterproof
- Three drive profiles
- Locked Rotor Protection™
- Battery Over Voltage Protection™
- Auxiliary fan output
- Low Voltage Detection
- EZ-Set® push-button setup
- Brushless control

VXL-3S ELECTRONIC SPEED CONTROL SPECS

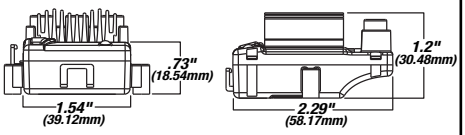

Input Voltage	4.8 - 11.1V (4 to 9 cells NiMH, 2S to 3S LiPo)
Motors	Sensorless Brushless
Motor Limit	None
Continuous Current	200A
Peak Current	320A
BEC Voltage	6.0 Volts DC
Transistor Type	MOSFET
On-Resistance	0.00075Ω
PWM Frequency	12,000Hz
Battery Connector	Traxxas High-Current Connector
Motor Connectors	TRX 3.5mm Bullet Connectors
Motor/Battery Wiring	12-gauge Maxx® Cable
Thermal Protection	Two-Stage Thermal Shutdown
Weight	109g (3.84 oz)
Profiles	Sport Mode: 100% fwd, 100% brakes, 100% rev. Race Mode: 100% fwd, 100% brakes, no rev. Training Mode™: 50% fwd, 100% brakes, 50% rev.

VXL-3M ELECTRONIC SPEED CONTROL #3375



- Waterproof
- Three drive profiles
- EZ-Set® push-button setup
- Efficient, low-loss MOSFET design
- Locked Rotor Protection™ cuts power if the vehicle is stuck or the motor is bound
- Battery Over Voltage Protection™ triggers failsafe if the maximum input voltage is exceeded

VXL-3M ELECTRONIC SPEED CONTROL SPECS

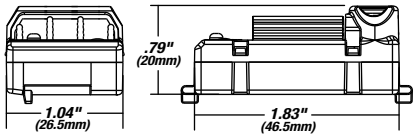

Input Voltage	7.2 - 14.4V (6 to 12 cells NiMH, 2S to 3S LiPo)
Motors	Sensorless Brushless
Motor Limit	None
Continuous Current	52A
Peak Current	150A
BEC Voltage	6.0 Volts DC
Transistor Type	MOSFET
On-Resistance	0.0005Ω
PWM Frequency	12,000Hz
Battery Connector	Traxxas High-Current Connector
Motor Connectors	TRX 3.5mm Bullet Connectors
Motor/Battery Wiring	16-Gauge
Thermal Protection	Two-Stage Thermal shutdown
Weight	38g (1.34 oz)
Profiles	Sport Mode: 100% fwd, 100% brakes, 100% rev. Race Mode: 100% fwd, 100% brakes, no rev. Training Mode™: 50% fwd, 100% brakes, 50% rev.

VXL-6S ELECTRONIC SPEED CONTROL #3385X



- Low Voltage Detection
- Integrated water cooling
- High-efficiency MOSFET transistors
- Thermal overload protection
- Voltage overload protection
- Locked rotor protection
- Throttle Neutral Setting protection
- Waterproof

VXL-6S ELECTRONIC SPEED CONTROL SPECS

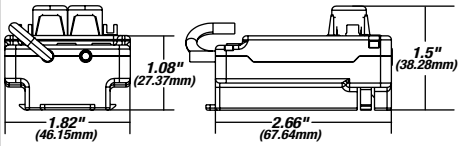

Input Voltage	7.2 - 25.7V (6 to 18 cells NiMH or 2S to 6S LiPo)
Motors	Sensorless Brushless
Motor Limit	None
Continuous Current	80A
Peak Current	300A
BEC Voltage	6.0 Volts DC
Transistor Type	MOSFET
Battery Connector	Traxxas High-Current Connector
Motor Connectors	5.5mm Bullet Connectors
Motor/Battery Wiring	13-Gauge
Protection Systems	Low Voltage Detection; Over Voltage; Thermal Overload; Throttle-Neutral Setting Protection
Profiles	Sport Mode: 100% fwd, 100% brakes, 100% rev. Race Mode: 100% fwd, 100% brakes, no rev. Training Mode™: 50% fwd, 100% brakes, 50% rev.

VELINEON 3500 BRUSHLESS MOTOR #3351R



- Ultra-high temperature sintered Neodymium motor magnets
- Balanced rotor on high speed ball bearings
- Protective molded endcap
- Optimized for smooth sensorless power
- No motor brushes or commutator to wear

VELINEON 3500 BRUSHLESS MOTOR SPECS

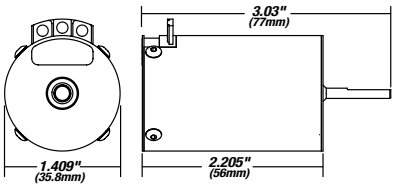

Type	Sensorless Brushless
RPM/volt	3500 (10-Turn)
Magnet Type	Ultra High-Temp. Sintered Neodymium
Connection Type	TRX 3.5mm Bullet
Wire Size	12-gauge Cable
Current Ratings	65A constant /100A peak/burst
Max RPM	50,000
Weight	262g (9.24 oz)

VELINEON 380 BRUSHLESS MOTOR #3371



- Ultra-high temperature sintered Neodymium motor magnets
- Balanced rotor
- High speed ball bearings
- No motor brushes or commutator to wear
- Optimized for smooth sensorless power

VELINEON 380 BRUSHLESS MOTOR SPECS

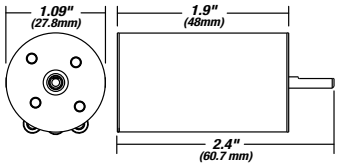

Type	Sensorless Brushless
RPM/volt	4000 (8-Turn)
Magnet Type	Ultra High-Temp. Sintered Neodymium
Connection Type	TRX 3.5mm Bullet
Wire Size	16-Gauge Cable
Current Ratings	25A constant /50A burst
Max RPM	50,000
Weight	140g (4.94 oz)

VELINEON 540XL BRUSHLESS MOTOR #3381X

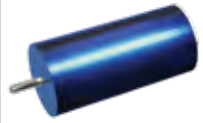

- Optimized for power and efficiency in marine applications
- Low-maintenance design
- Efficient, high-speed ball bearings
- Precision-balanced rotor
- 5mm output shaft
- Silicon steel laminations

VELINEON 540XL BRUSHLESS MOTOR SPECS

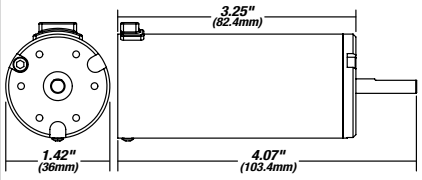

Type	Sensorless Brushless
RPM/volt	1800
Magnet Type	Ultra High-Temp. Sintered Neodymium
Connection Type	5.5mm Bullet
Wire Size	13-Gauge
Current Rating	120A
Max RPM	50,000
Weight	386g (13.62 oz)



Traxxas 2400 kV Motor Specs

Type:	Sensorless brushless
RPM/volt (Kv)	2400
Connection type	TRX 6.5mm bullet
Length	91mm
Diameter	36mm
Weight	317g



VXL-4S Specs

Input voltage	3S–4S LiPo (11.1V – 16.8V)
Supported motors	Sensorless Brushless
Battery connector	Traxxas High-Current Connector
Motor connector	TRX 6.5mm bullet
Motor/battery wiring	10-gauge Maxx® Cable
Weight	201g (7.09 oz.)
Case size	72mm (2.83")/ 59mm (2.32")/ 49mm (1.93")





Traxxas 2200 kV Motor Specs

Max Input Volts:	25.2
Amp Rating:	120
Weight:	424g (15 oz)
Motor Diameter:	39.98mm
Motor Length:	75.18mm
Shaft:	5mm
Bearings:	Oversize ABEC-1 front and rear
Connector:	6.5mm

VXL-6S Specs

Input voltage	12-16 cells NiMH; 4s/6s LiPo (max. 22.2 volts)
Supported motors	Sensorless brushless
Battery connectors	Traxxas High-Current Connector
Motor connectors	TRX 6.5mm bullet connectors
Motor/battery wiring	10-gauge Maxx® Cable
Weight	207g (7.301oz)
Case size (L/W/H)	58mm (2.28")/ 72mm (2.83")/ 46mm (1.81")





Traxxas 1200XL Brushless Motor Specs

Type	Sensorless brushless
RPM/volt (Kv)	1200
Connection type	TRX 6.5mm bullet
Diameter	48mm (1.88")
Length	110mm (4.32")
Weight	665g (23.44oz)

VXL-8s Specs

Input voltage	4S/6S/8S LiPo (max. 33.6 volts)
Supported motors	Sensorless Brushless
Battery connector	Traxxas High-Current Connector
Motor connector	TRX 6.5mm bullet connectors
Motor/battery wiring	10-gauge Maxx® Cable
Weight	182g (6.42 oz.)
Case size	58mm (2.28")/ 72mm (2.83")/ 46mm (1.81")

Specs per published specifications at the time of manufacture. Specifications subject to change.

POWER SYSTEMS

XL-5 ELECTRONIC SPEED CONTROL #3018R



- Low Voltage Detection for LiPo use
- Proportional forward, reverse, and braking control
- Smooth, high-frequency operation
- EZ-Set® push-button with integrated on/off switch
- Waterproof

XL-5 ELECTRONIC SPEED CONTROL SPECS

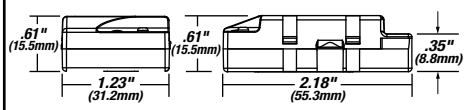

Input Voltage	4.8 - 8.4V (4-7 cells NiMH; 2S LiPo)
Motor Limit	15-Turns (540 Size); 12-Turns (550 Size)
BEC Voltage/Current	6.0V DC /1A
Transistor Type	MOSFET
On-Resistance (Fwd./Rev.)	0.007Ω /0.014Ω
PWM Frequency	2300 Hz
Battery Connector	Traxxas High-Current Connector
Motor Connectors	TRX 3.5mm Bullet Connectors
Motor/Battery Wiring	16-Gauge
Protection	Thermal Shutdown
Peak Current (Fwd/Rev)	100A/60A
Braking Current	60A
Continuous Current	14A
Weight	69 grams, 2.44 ounces
Profiles	Sport Mode: 100% fwd, 100% brakes, 100% rev. Race Mode: 100% fwd, 100% brakes, no rev. Training Mode™: 50% fwd, 100% brakes, 50% rev.

ET-3S ELECTRONIC SPEED CONTROL #3394C



- Developed exclusively for use with Traxxas 1/8 Scale NHRA Funny Car Race Replica
- Custom programming exclusively for authentic drag racing
- Exclusive Staging Mode (patent pending) allows the Traxxas Funny Car to creep

ET-3S ELECTRONIC SPEED CONTROL SPECS

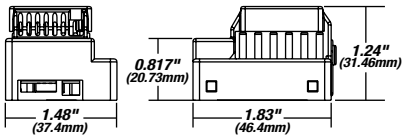

Input Voltage	7.2 - 11.1V (6 to 8 cell NiMH, 2-3S LiPo)
Motors	Sensorless Brushless
Motor Limit	None
On-Resistance	0.0003Ω
Battery Connector	Traxxas High-Current Connector
Motor Connectors	3.5mm Bullet Connectors
Low Voltage Detection	Programmable
Weight	121g

ET-2400 BRUSHLESS MOTOR #3393C



- Designed specially for maximum performance and reliability with the ET-3S speed control
- High-grade bearings
- Finned aluminum motor can acts as a massive heatsink

ET-2400 BRUSHLESS MOTOR SPECS

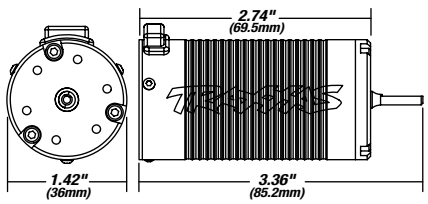

Type	1415 Sensorless brushless
RPM/volt	2400
Magnet Type	Ultra High-Temp. Sintered Neodymium
Connection Type	3.5mm Bullet
Wire Size	12-gauge
Max RPM	75,000
Weight	299g (10.55 oz)

EVX-2 ELECTRONIC SPEED CONTROL #3019R



- 16.8 Volts of power
- Low Voltage Detection for LiPo use
- Patent-pending Training Mode
- Waterproof design
- EZ-Set® push-button with integrated on/off switch
- Microprocessor controlled

EVX-2 ELECTRONIC SPEED CONTROL SPECS

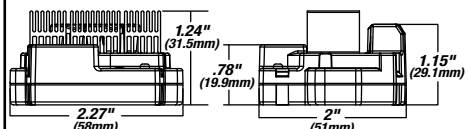

Input Voltage	7.2 - 16.8V (12-14 cells NiMH; 2S x2 LiPo)
Motor Limit	10-Turns (540 Size); 12-Turns (550 Size)
BEC Voltage/Current	6.0V DC /2.5A
Transistor Type	MOSFET
On-Resistance (@Trans)–Fwd./Rev.	0.004Ω /0.004Ω
PWM Frequency	1700 Hertz
Battery Connector	Traxxas High-Current Connector
Motor Connectors	TRX 3.5mm Bullet Connectors
Motor/Battery Wiring	14-Gauge
Protection	Thermal Shutdown
Rated Current–Fwd./Rev.	180A/180A
Braking Current	360A
Continuous Current (@100°F amb.)	30A
Weight	114 grams, 4.02 ounces
Profiles	Sport Mode: 100% fwd, 100% brakes, 100% rev. Race Mode: 100% fwd, 100% brakes, no rev. Training Mode™: 50% fwd, 100% brakes, 50% rev

XL-2.5 ELECTRONIC SPEED CONTROL #3024R



- Low Voltage Detection for LiPo use
- Proportional forward, reverse, and braking control
- Smooth, high-frequency operation
- Efficient, low-loss MOSFET design
- EZ-Set® push-button with integrated on/off switch
- Waterproof

XL-2.5 ELECTRONIC SPEED CONTROL SPECS

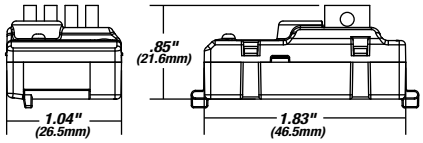

Input Voltage	4.8 - 8.4V (4 to 7 cells NiMH)2s LiPo)
Motor Limit	10-Turns (380 Size), 12-Turns (550 Size)
BEC Voltage	6.0 Volts DC
Transistor Type	MOSFET
On-Resistance	0.008Ω
PWM Frequency	2300Hz
Battery Connector	Traxxas High-Current Connector
Motor Connectors	TRX 3.5mm Bullet Connectors
Motor/Battery Wiring	16-Gauge
Thermal Protection	Thermal shutdown
Weight	33g (1.164 oz)
Profiles	Sport Mode: 100% fwd, 100% brakes, 100% rev. Race Mode: 100% fwd, 100% brakes, no rev. Training Mode™: 50% fwd, 100% brakes, 50% rev.

NAUTICA ELECTRONIC SPEED CONTROL #3010X



- Forward only electronic speed control
- Proportional control
- Designed for marine applications
- Traxxas high-current connector
- Waterproof

NAUTICA ELECTRONIC SPEED CONTROL SPECS

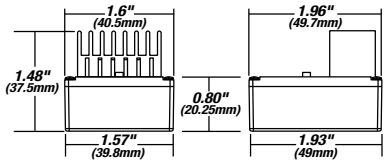

Input Voltage	4.8 - 7.2V (4 to 6 cells NiMH)
Motor Limit	20-Turns
BEC Voltage/Current	6.0 Volts DC /2.5A
Motor/Battery Wiring	16-Gauge
Input Harness Wire	26-Gauge
Weight	90g (3.175 oz)

TITAN 12T MOTOR #3785



- 550 modified motor
- Virtually maintenance-free operation
- Long-lasting performance
- Integrated cooling fan

TITAN 12T MOTOR SPECS

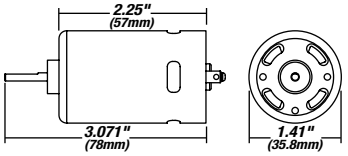

Size	550
Turns	12T
Voltage	8.4 V
Weight	240g (8.47 oz)

TITAN 550 MOTOR #3975



- 550 high-torque motor
- 30% longer motor armatures than a standard 540
- Monster big block torque
- Integrated cooling fan

TITAN 550 MOTOR SPECS

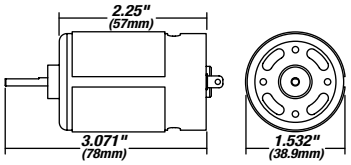

Size	550
Turns	21T
Voltage	16.8 V
Weight	240g (8.47 oz)

TITAN 775 MOTOR #5675



- Heavy-duty 5mm output shaft
- The largest high-torque brushed motor offered by Traxxas
- Fan-cooled five-pole armature
- Superior torque and smoothness
- Extra wrap of steel around the can for maximum magnetic field strength

TITAN 775 MOTOR SPECS

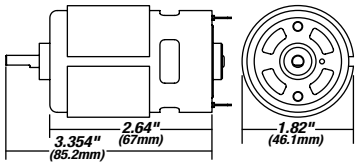

Size	775
Turns	10T
Voltage	16.8 V
Weight	390g (13.76 oz)

STINGER MOTOR #1275



- 30% faster than the typical stock motor
- 20-turn single modified motor
- Mild modified motor
- High speed and long runtime

STINGER MOTOR SPECS

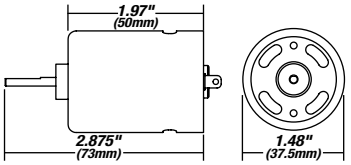

Size	540
Turns	20T
Voltage	7.2 V
Weight	145g (5.12 oz)

SERVOS

Specs

	Torque	Transit Time
Part #2018 Standard Servo	42 oz-in.	0.22 sec./60°
Part #2055 High-Torque Servo	86 oz-in.	0.20 sec./60°
Part #2056 Waterproof High-Torque Servo	80 oz-in.	0.23 sec./60°
Part #2060 Sub-micro Servo	22 oz-in.	0.20 sec./60°
Part #2065 Waterproof Sub-micro Servo	22 oz-in.	0.20 sec./60°
Part #2070 Digital High-Torque Servo with Ball Bearing	125 oz-in.	0.17 sec./60°
Part #2075 Waterproof Digital High-Torque Servo with Ball Bearing	125 oz-in.	0.17 sec./60°
Part #2075X Waterproof Digital High-Torque Servo	125 oz-in.	0.17 sec./60°
Part #2085X Waterproof Digital High-Torque Servo*	450 oz-in.	0.17 sec./60°
Part #2085 Waterproof Digital High-Torque Servo*	365 oz-in.	0.17 sec./60°
Part #2250 High-Torque 330 Waterproof Metal Gear Servo	330 oz-in.	0.19 sec./60°
Part #2255 High-Torque 400 Waterproof Metal Gear Servo	400 oz-in.	0.15 sec./60°

* Compatible with X-Maxx only

2018 Standard Servo

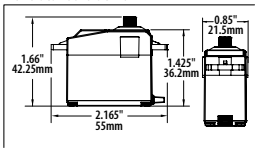

2060 Sub-micro Servo

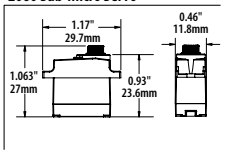

2075 Waterproof Digital High-Torque Servo

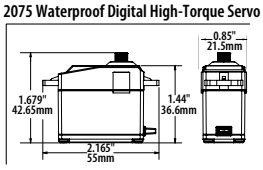

2055 High-Torque Servo

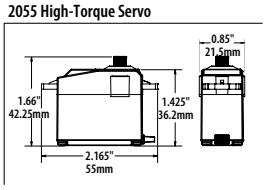

2065 Waterproof Sub-micro Servo

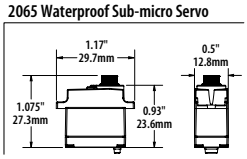

2080 Waterproof Micro Servo

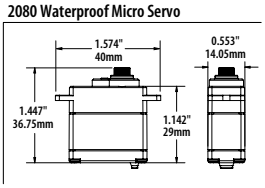

2056 Waterproof High-Torque Servo

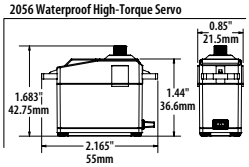

2070 Digital High-Torque Servo

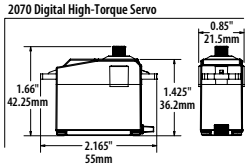

2085/2085X Waterproof Micro Servo

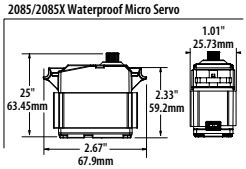

Compatibility

Model	Part	Standard Servo 2018	High-Torque Servo 2055	Waterproof High-Torque Servo 2056	Sub-micro Servo 2060	Waterproof Sub-micro Servo 2065	Digital High-Torque Servo 2070	Waterproof Digital High-Torque Servo 2075/2075X*	Waterproof Micro Servo 2080	Digital High-Torque Ball Bearing Servo 2090	High-Torque Waterproof Metal Gear Servo 2250/2255
Bandit	24054-1	x	*Fits!*	Stock	–	–	*Upgrade!*	Upgrade	–	–	Upgrade
Rustler	37054-1	x	*Fits!*	Stock	–	–	*Upgrade!*	Upgrade	–	–	Upgrade
Stampede	36054-1	x	*Fits!*	Stock	–	–	*Upgrade!*	Upgrade	–	–	Upgrade
Bigfoot #1/ Bigfoot	36034-1/36084-1	x	*Fits!*	Stock	–	–	*Upgrade!*	Upgrade	–	–	Upgrade
Bandit VXL	24076-3	x	x	x	–	–	*Fits!*	Stock	–	–	Upgrade
Rustler VXL	37076-3	x	x	x	–	–	*Fits!*	Stock	–	–	Upgrade
Stampede VXL	36076-3	x	x	x	–	–	*Fits!*	Stock	–	–	Upgrade
E-Maxx	39036-4	x	*Fits!*	Stock	–	–	*Upgrade!*	Upgrade	–	–	Upgrade
E-Maxx Brushless	39086-4	x	x	x	–	–	*Fits!*	Stock	–	–	Upgrade
Summit	56076-4	x	x	x	*Fits (Shift)!*	Stock (Shift)	*Fits!*	Stock	–	–	Upgrade
E-Revo E-Revo Brushless	56036-4/56086-4	x	x	x	–	–	*Fits!*	Stock	–	–	Upgrade
Maxx	89076-4	x	x	x	–	–	*Fits!*	–	–	Stock	Upgrade
Hoss 4x4 VXL	90076-4	x	x	x	–	–	*Fits!*	Stock	–	–	Upgrade
Slash 2WD Models	58024/ 58034-1 58034-2/ 58076-3 58076-21	x	x	x	–	–	*Fits!*	Stock	–	–	Upgrade
XO-1	64077-3	x	x	x	–	–	*Fits!*	Stock	–	–	Upgrade
Stampede 4X4 VXL	67086-3	x	x	x	–	–	*Fits!*	Stock	–	–	Upgrade
Rustler 4x4, Stampede 4x4, Slash 4X4 Models	67064-1/67054-1/ 6804R/ 68077-24/ 68086-4	x	x	x	–	–	*Fits!*	Stock	–	–	Upgrade
1/16 Scale Models	70054-1/71054-1 72076-3/71076-3	–	–	–	–	–	–	–	Stock	–	Upgrade
Fiesta ST Rally	74054-6	x	x	x	–	–	*Fits!*	Stock	–	–	Upgrade
Ford GT/ Mustang GT/ 4-Tec 2.0	83056-4/ 83044-4/ 83076-4/83024-4	x	x	x	–	–	x	Stock	–	–	Upgrade
TRX-4	82056-4	x	x	x	–	–	x	2075 Stock	–	–	Upgrade
T-Maxx 3.3	49077-3	x	*Stock (T)!*	Upgrade (T)	–	–	*Stock (S)!*	Upgrade (T/S)	–	–	Upgrade (T/S)
Revo 3.3	53097-3	x	*Fits (T)!*	Stock (T)	*Fits (Shift)!*	Stock (Shift)	*Fits (S)!*	Stock (S)	–	–	Upgrade (T/S)
Jato 3.3	55077-3	x	*Stock (T/S)!*	Upgrade (T/S)	–	–	*Upgrade (T/S)!*	Upgrade (T/S)	–	–	Upgrade (T/S)
Nitro Stampede	41096-3	x	*Stock (T/S)!*	Upgrade (T/S)	–	–	*Upgrade (T/S)!*	Upgrade (T/S)	–	–	Upgrade (T/S)
Nitro Slash	44056-3	x	*Stock (T/S)!*	Upgrade (T/S)	–	–	*Upgrade (T/S)!*	Upgrade (T/S)	–	–	Upgrade (T/S)
Nitro Rustler	44096-3	x	*Stock (T/S)!*	Upgrade (T/S)	–	–	*Upgrade (T/S)!*	Upgrade (T/S)	–	–	Upgrade (T/S)
Nitro Sport	45104-1	x	*Stock (T/S)!*	Upgrade (T/S)	–	–	*Upgrade (T/S)!*	Upgrade (T/S)	–	–	Upgrade (T/S)
T-Maxx Classic	49104-1	x	*Stock (T/S)!*	Upgrade (T/S)	–	–	*Upgrade (T/S)!*	Upgrade (T/S)	–	–	Upgrade (T/S)
Slayer Pro 4X4	59076-3	x	*Fits (T/S)!*	Stock (T)	–	–	*Upgrade (T)!*	Stock	–		Upgrade (T/S)
Blast	38104-1	x	x	Stock	–	–	x	Upgrade	–		Upgrade
Spartan	57076-4	x	x	Stock	–	–	x	Upgrade	–		Upgrade
DCB M41	59076-4	x	x	Stock	–	–	x	Upgrade	–		Upgrade

x : Not recommended, but will fit ***Italics!* :** Dry use only **(T):** Throttle Servo **(S):** Steering Servo –**:** Does not fit

***2075X stock on TRX-4 only. Upgrade for all other models.**

Specifications on this page are subject to change without notice. Some parts listed are optional accessories. Every attempt has been made to ensure the accuracy of this drawing, however Traxxas cannot be held responsible for typographical or other errors

Servo Assemblies

#.....Description
1.....Output gear
2.....Top reduction gear
3.....Offset pinion reduction gear
4.....Center reduction gear
5.....Bottom reduction gear
6.....Output shaft
7.....Gear shaft
8.....Pinion gear
9.....Motor
10...Lower gasket
11...Case screw O-ring
12...Upper gasket
13...Output shaft O-ring

2065 Waterproof Micro Servo

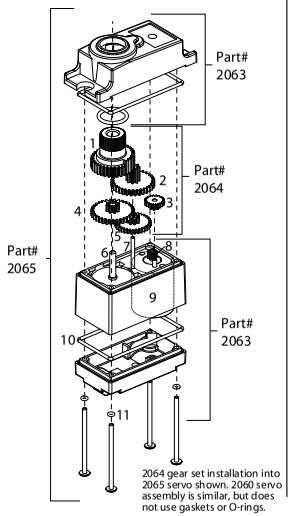

2060 Micro Servo

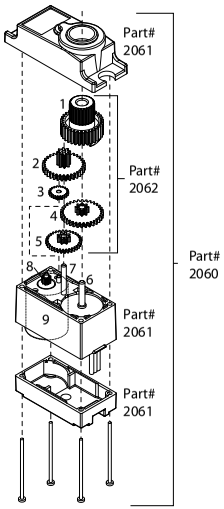

#.....Description
1.....Bushing race (cover)
2.....Output gear top bushing
3.....Output gear
4.....Bushing race (cover)
5.....Output gear bottom bushing
6.....Top reduction gear
7.....7mm gear shaft
8.....Bottom reduction gear
9.....Pinion gear
10...Center reduction gear
11...Sensor pot
12...Motor
13...12mm gear shaft
14...Output gear top bearing
15...Output gear bottom bearing
16...Output shaft O-ring
17...Upper case gasket
18...Lower case gasket
19...Case screw O-ring

2018 Servo

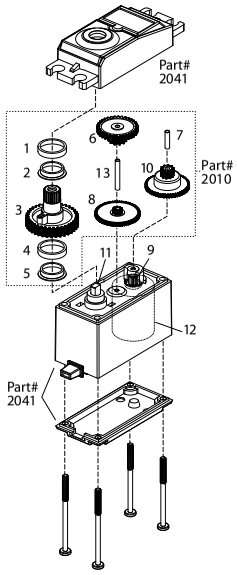

2055 Servo

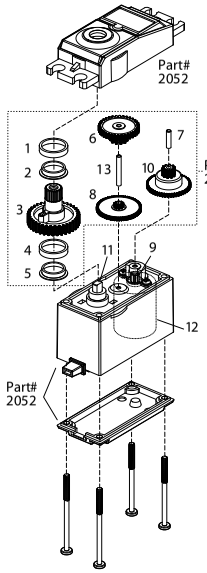

2070 Servo

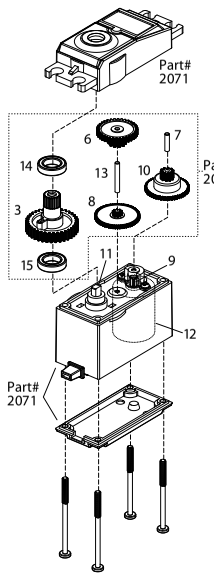

#.....Description
1.....Bushing race (cover)
2.....Output gear top bushing
3.....Output gear
4.....Bushing race (cover)
5.....Output gear bottom bushing
6.....Top reduction gear
7.....7mm gear shaft
8.....Bottom reduction gear
9.....Pinion gear
10...Center reduction gear
11...Sensor pot
12...Motor
13...12mm gear shaft
14...Output gear top bearing
15...Output gear bottom bearing
16...Output shaft O-ring
17...Upper case gasket
18...Lower case gasket
19...Case screw O-ring

2056 Waterproof Servo

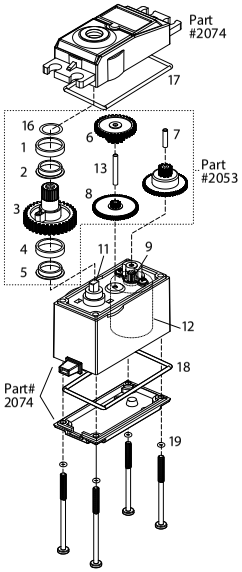

2075/2075X Digital Waterproof Servo

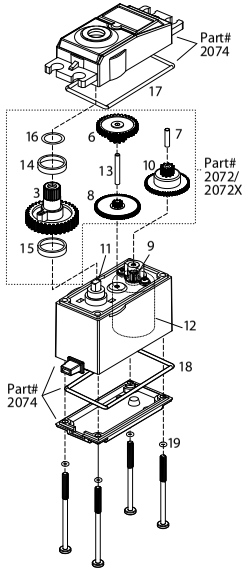

2085/2085X Waterproof Servo

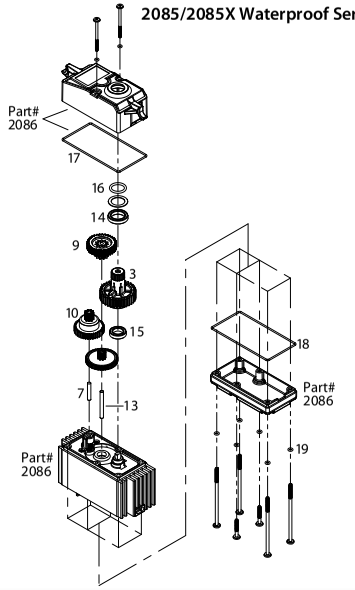

Questions? **Call toll-free, 1-888-TRAXXAS**

ELECTRONICS

PARTS SHOWN IN BOLD ARE OPTIONAL ACCESSORIES.

Part categories and individual part listings are arranged alphabetically.

Electronic Speed Controls

2260	BEC assembly (complete)
3475	Cooling fan, Velineon® VXL ESC (fits VXL-6s & VXL-8s)
3340	Cooling fan, Velineon® VXL-3s ESC
3010X	Nautica Electronic Speed Control (forward only, waterproof)
3370	Velineon® VXL-3m Brushless Power System, waterproof (includes waterproof VXL-3m ESC and Velineon 380 motor)
3350R	Velineon® VXL-3s Brushless Power System, waterproof (includes VXL-3s waterproof ESC, Velineon 3500 motor, and speed control mounting plate (part #3725R))
3355R	Velineon® VXL-3s Electronic Speed Control, waterproof (brushless) (fwd/rev/brake)
3440	Velineon® VXL-4s Brushless Power System, waterproof (includes VXL-4s ESC and 2400Kv, 70mm motor)
3465	Velineon® VXL-4s High Output Electronic Speed Control, waterproof (brushless) (fwd/rev/brake)
3480	Velineon® VXL-6s Brushless Power System, waterproof (includes VXL-6s ESC and 2200Kv, 75mm motor)
3485	Velineon® VXL-6s Electronic Speed Control, waterproof (brushless) (fwd/rev/brake)
3496	Velineon® VXL-8s Electronic Speed Control, waterproof (brushless) (fwd/rev/brake)
3375	VXL-3m Electronic Speed Control, waterproof (brushless)
3024R	XL 2.5 Electronic Speed Control, waterproof

Optidrive Electronic Shift Module

5398	Optidrive® electronic shift module
5397	Optidrive® sensor assembly/ 2.5x6mm CS (2)

Receivers

1589	Double-sided adhesive tape (25mm x 25mm) (2)
6519	Receiver, micro, TQ 2.4GHz (3-channel)
6533	Receiver, micro, TQi 2.4GHz with telemetry & TSM (5-channel)
6518	Receiver, micro, TQi 2.4GHz with telemetry (5-channel)
6509R	TQi 2.4 GHz High Output radio system, 2-channel, Traxxas Link™ enabled, TSM (2-ch transmitter, 5-ch micro receiver)
6507R	TQi 2.4 GHz High Output radio system, 4-channel with Traxxas Link™ Wireless Module, TSM (4-ch transmitter, 5-ch micro receiver)

Servos

2010	Gear set (for 2018 servos)
2062	Gear set (for 2060 sub-micro servo)
2064	Gear set (for 2065 waterproof sub-micro servo)
2064A	Gear set (for 2065A waterproof sub-micro servo)
2072A	Gear set (for 2070, 2075 servos)
2082	Gear set (for 2080 micro waterproof servo)
2087	Gear set (for 2085 servo)
2092	Gear set (for 2090 servo)
2272	Gear set (for 2270 waterproof servo)
2064X	Gear set, metal (for 2065X waterproof sub-micro servo)
2072X	Gear set, metal (for 2070, 2075 servos)
2252	Gear set, metal (for 2250, 2255 servos)
2072R	Gear set, metal, high speed (for 2070, 2075 servos)
2041	Servo case (for 2018 servo)
2052	Servo case (for 2055 servo)
2061	Servo case (for 2060 sub-micro servo)
2071	Servo case (for 2070 servo)
2254	Servo case, aluminum (blue-anodized) (middle) (for 2250 servo)
2253	Servo case, aluminum (red-anodized) (middle) (for 2255 servo)
2251	Servo case, plastic (top, middle, bottom)/ gaskets/ hardware (for 2250, 2255 servos)
2081	Servo case/ gaskets (for 2080 micro waterproof servo)
2091	Servo case/ gaskets (for 2090 waterproof servo)
2271	Servo case/ gaskets (for 2270 waterproof servo)
2074	Servo case/gaskets (for 2056 and 2075 waterproof servos)
2063	Servo case/gaskets (for 2065 waterproof sub-micro servo)
2063A	Servo case/gaskets (for 2065A waterproof sub-micro servo)
2063X	Servo case/gaskets (for 2065X metal gear, waterproof, sub-micro servo)
2086	Servo case/gaskets (for 2085 & 2085X servos)
2046	Servo connector, Y adapter (for dual-servo steering)
2053	Servo gears (for 2055, 2056 servos)
2075R	Servo, digital high-speed, metal gear (ball bearing), waterproof
2070	Servo, digital high-torque (ball bearing)
2075	Servo, digital high-torque (ball bearing), waterproof
2090	Servo, digital high-torque (ball bearing), waterproof
2085	Servo, digital high-torque (ball bearing), waterproof (X-Maxx®/Maxx® mount)
2250	Servo, digital high-torque 330 coreless, metal gear (ball bearing), waterproof
2255	Servo, digital high-torque 400 brushless, metal gear (ball bearing), waterproof
2075X	Servo, digital high-torque, metal gear (ball bearing), waterproof
2270	Servo, digital high-torque, metal gear (ball bearing), waterproof
2085X	Servo, digital high-torque, metal gear (ball bearing), waterproof/ servo saver spring/ steering link
2055	Servo, high-torque
2056	Servo, high-torque, waterproof (blue case)
2080	Servo, micro, waterproof
2080A	Servo, micro, waterproof
2080X	Servo, micro, waterproof, metal gear
2018	Servo, standard
2060	Servo, sub-micro
2065	Servo, sub-micro, waterproof
2065A	Servo, sub-micro, waterproof
2065X	Servo, sub-micro, waterproof, metal gear

Telemetry Sensors & Accessories

6546	Battery door, TQi transmitter (replacement for #6513, 6514, 6515 transmitters)
5632	Chassis brace, rear (fits E-Revo®/Summit)
6525	Communication link, telemetry expander
6541	Connector, power tap (with cable) (long)/ wire tie
6543	Connector, power tap (with cable) (short)/ wire tie
6542X	Flywheel (large, knurled for use with starter boxes)
6542	Flywheel with magnet (35mm)
6554	Mount, telemetry expander (fits Bandit, Rustler®, Slash 2WD)
6558	Mount, telemetry expander (fits Funny Car, Nitro 4-Tec®)
6555	Mount, telemetry expander (fits Slash 4X4, Stampede® 4X4, Rally, Jato®)
6559	Mount, telemetry expander (fits Spartan)
6557	Mount, telemetry expander (fits Stampede® 2WD)
6556	Mount, telemetry expander (fits XO-1®, E-Revo®*, Summit*, all T-Maxx®/E-Maxx® trucks, Revo® 3.3, Slayer Pro 4X4) (*requires rear chassis brace #5632)
6535	Mount, temperature sensor (electric motors)/ wire tie/ thermal pad
6536	Mounts, RPM sensor (nitro engines)/ 3x10mm CS with split and flat washers (2)
6552	Seal kit, expander box (includes o-ring, seals, and silicone grease)
6526	Sensor, auto-detectable, temperature
6527	Sensor, auto-detectable, voltage
6520	Sensor, RPM (long)/ 3x4mm BCS (2)/ 3x4 GS (1)
6522	Sensor, RPM (short)/ 3x4mm BCS (2)
6524	Sensor, temperature & voltage (fits XO-1®)
6521	Sensor, temperature and voltage (long)
6523	Sensor, temperature and voltage (short)
6544	Spacers (4)/ grip pads (3)/connector dust cover (1) (for TQi docking base)
6553X	Telemetry expander 2.0 and GPS module 2.0, TQi radio system
6550X	Telemetry expander 2.0, TQi radio system (for use only with #6551X GPS module)
6551X	Telemetry GPS module 2.0, TQi radio system (for use only with #6550X telemetry expander)
6539	Telemetry trigger magnet holder, center differential/ magnet, 5x2mm (1)/ 3x8mm BCS (3)
6534	Telemetry trigger magnet holder/ magnet 5x2mm (1)
6538	Telemetry trigger magnet holders, spur gear/ magnet, 5x2mm (1)/ 3x8mm CCS (3)/ 3x10mm CCS (3)
6540	Telemetry trigger magnet, 5X2mm (1)
6511	Traxxas Link™ Wireless Module
6537	Wire retainers, gear cover/ 3x4mm BCS (2)

Transmitters

2223	Battery door (For use with TQ and TQ-3 pistol grip transmitters)
6546	Battery door, TQi transmitter (replacement for #6513, 6514, 6515 transmitters)
6548	Battery door, transmitter (replacement for #6516, 6517, 6528, 6529, 6530 transmitters)
2226	Spring contacts, transmitter (for TQ series transmitter battery compartment)
2224	Steering wheel foam grip
2017	Telescoping antenna for use with all Traxxas® transmitters
6509R	TQi 2.4 GHz High Output radio system, 2-channel, Traxxas Link™ enabled, TSM (2-ch transmitter, 5-ch micro receiver)

6507R	TQi 2.4 GHz High Output radio system, 4-channel with Traxxas Link™ Wireless Module, TSM (4-ch transmitter, 5-ch micro receiver)
6516	Transmitter, TQ 2.4GHz, 2-channel (transmitter only)
6517	Transmitter, TQ 2.4GHz, 3-channel (transmitter only)
6528	Transmitter, TQi Traxxas Link™ enabled, 2.4GHz high output, 2-channel (transmitter only)
6529	Transmitter, TQi Traxxas Link™ enabled, 2.4GHz high output, 3-channel (transmitter only)
6530	Transmitter, TQi Traxxas Link™ enabled, 2.4GHz high output, 4-channel (transmitter only)

If you have questions or need technical assistance, call Traxxas at:

1-888-TRAXXAS

(1-888-872-9927) (U.S. residents only)

For orders, calls outside the U.S., and other information, call 972-549-3000, or fax to 972-549-3011 e-mail Traxxas at support@Traxxas.com

TRAXXAS.com

REV. 200917 1238

Batteries · Chargers

EZ-Peak™ DUAL



EZ-Peak LIVE™

THERE'S ONLY ONE CHOICE FOR SPEED!

Traxxas iD batteries deliver an easier and safer LiPo charging solution when used with our exclusive iD chargers. Just plug in your iD batteries and press start! There's no need to be a battery expert or learn how to navigate complex menus. iD chargers handle all the settings and quickly give you an optimized charge, every time. Choose the best charger for your needs from the economical EZ-Peak Plus, the powerful 8-amp EZ-Peak Dual, or the advanced 12-amp EZ-Peak Live with EZ-Peak Live app support and Bluetooth connectivity.

TRAXXAS®
The Fastest Name In Radio Control®

POWER CELL BATTERIES

POWER CELL

Traxxas models are known for unmatched speed and acceleration. Now, there's a line of batteries you can count on to deliver all the performance that's been engineered into Traxxas models. Traxxas Power Cell Battery Packs are optimized for free-flowing power and maximum punch with premium quality construction and Traxxas' high-output, gold plated, High-Current Connectors. Precision-assembled Traxxas Power Cell batteries are engineered specifically to fit Traxxas models and maximize their full performance potential.



From top:
Series 5, 5000 mAh
Series 4, 4200 mAh
Series 3, 3300 mAh

Premium-Quality Cells



- Premium-quality cells selected specifically for Traxxas models
- Low internal resistance delivers powerful 'punch'
- High capacity for long run times

Heavy-Duty Construction



- Double-thick battery tabs strengthen the pack and decrease resistance
- Quad-welded construction
- Thick 'shotgun tube' and heavy-duty end caps protect the cells

NiMH BATTERIES

LiPO BATTERIES



From left:
4-cell, 6700 mAh
3-cell, 5000 mAh
2-cell, 7600 mAh

Lifetime Battery Exchange Program

Traxxas stands by Power Cell LiPo batteries with the best warranty and exchange program available. For the first year of ownership, Traxxas will replace any battery found to be defective at no cost.

High-Current Connector



Spring-Loaded Terminals
For Consistent Contact

Gold Plated Terminals
Low Resistance For High-Current Flow

- Gold-plated copper terminals deliver maximum efficiency
- Large contact area for lasting performance
- Easy-to-grip housing prevents wire strain and conceals the solder joints

Semi-Rigid Design



- Unique construction method
- Firm, rugged, and compact pack
- Greater capacity in a given size, unlike a hard-cased pack
- Any change in the pack due to damage or abuse is easily visible

MAXX® Cable



- Soft, silicone insulation
- High-efficiency 12-gauge wire for free-flowing current
- Flexible multi-strand construction

Oversized Tabs



- Larger surface area maximizes pack performance
- Extra-wide discharge tabs ensure minimum resistance
- Wider tabs deliver more power and capacity on every run

BATTERY AND CHARGER COMPLETER GUIDE

NiMH Long Completer Pack (#2983)

Includes Battery & Charger (Add-on Sale)

Slash
Slash OBA
Slash VXL OBA
Slash VXL
2017 Ford Raptor
Slash 4X4 OBA
1/10 Rally

Requires Battery & Charger

Slash
Slash 4X4 Ultimate
Slash 4X4
TRX-4
4-Tec 2.0



NiMH Hump Completer Pack (#2984)

Includes Battery & Charger (Add-on Sale)

Bandit
Bandit VXL
Stampede
Stampede VXL
Bigfoot
Rustler
Rustler VXL
Stampede 4X4
Stampede 4X4 VXL



2s Completer Pack (#2991)

E-Revo Brushless
M41
Spartan
XO-1
X-Maxx
E-Revo
Summit



2s Single Completer Pack (#2992)

Bandit
Bandit VXL
Stampede
Stampede VXL
Bigfoot
Rustler
Rustler 4x4
Rustler 4x4 VXL
Rustler VXL
Hoss 4x4 VXL
Slash
Slash OBA
Slash VXL OBA
Slash VXL
2017 Ford Raptor
Stampede 4X4
Stampede 4X4 VXL
Slash 4X4 Ultimate
Slash 4X4 OBA
Slash 4X4
1/10 Rally
TRX-4
4-Tec 2.0



3s Single Completer Pack (#2994)

Bandit VXL
Stampede VXL
Rustler VXL
Rustler 4x4 VXL
Hoss 4x4 VXL
Slash VXL OBA
Slash VXL
Stampede 4X4 VXL
Slash 4X4 Ultimate
TRX-4
4-Tec 2.0



Perfect for ALL 1/10 Scale Single Battery Models!

3s Completer Pack (#2990)

E-Revo Brushless
M41
Spartan
XO-1
X-Maxx



4s Single Completer Packs (#2996X)

Maxx



4s Completer Packs (#2993, #2997-EZ Peak Live Dual)

X-Maxx



BATTERY CHARGERS

THE MOST POWERFUL, MOST ADVANCED CHARGERS EVER FROM TRAXXAS!

EZ-Peak Live DUAL



EZ-Peak Dual
Part #2973

EZ-Peak Live
Part #2971

Bluetooth ENABLED FEATURES

26+ AMP NiMH/LiPO FAST CHARGER

iD Auto Battery Identification

Traxxas iD batteries deliver an easier and safer LiPo charging solution when used with our exclusive iD chargers. You just plug in your iD batteries and press start. The iD charger handles all the settings and quickly gives you an optimized charge, every time. The 4s capable EZ-Peak Live Dual multi-chemistry charger is our newest and most advanced charger, equipped with built-in Bluetooth to work seamlessly with the Traxxas EZ-Peak Live™ app for iOS and Android. The EZ-Peak Live app gives you detailed information, remote monitoring, and advanced operating functions through the high-definition color interface on your device. It's our finest charger in the popular EZ-Peak iD lineup.

EZ-Peak LIVE

ONE CONNECTION DOES IT ALL!



1st Generation
High-Current Connector



LiPo Balance Connector
(Without iD)



High-Current Connector
with iD



4s High-current Connector with
Integrated Balance Wires

AC Input	100-240V, 50-60Hz, 1.5A
Charge Current Range	1.0—12.0A
Discharge Current Range	665mAh
Current Drain For Balancing Port	665mAh
NiCd/NiMH Battery Cell Count	5-8 Cells
LiPo/LiFe/Lilon Cell Count	2-4 Cells
Net Weight	526g
Dimensions	133 x 169 x 55mm

EZ-Peak DUAL

FASTER, EASIER CHARGING

Simple. Fast. Just plug in a pair of Traxxas iD batteries and press Start. Traxxas' exclusive iD technology eliminates complicated charger programming by automatically configuring and optimizing the charge settings for Traxxas iD batteries. The EZ-Peak Dual charges two batteries simultaneously at up to 50 watts (4-amps) each, or switch to High-Output mode to charge a single battery at the maximum 100 watt (8-amps) output. Charging faster means more fun time behind the wheel. You can even charge a NiMH and a LiPo at the same time! The progress bar and audible alerts keep you informed while the advanced high resolution peak detection delivers a perfect charge every time. The EZ-Peak Dual's Storage Mode protects your LiPo battery investment by safely preparing the batteries for extended storage.

Part #2972
Ez-Peak Dual Charger



8 AMP

100 Watts

iD Auto Battery Identification

EZ-Peak PLUS

Part #2970



One Connection Does it All!

- Fast charges 5-8 cell packs or 2s and 3s LiPo batteries
- Recognizes Traxxas iD batteries to automatically program and optimize charger settings
- Built-in balance ports

Part
#2975/ 2974



4 AMP

2 AMP

- Traxxas 4-amp or 2-amp DC Peak Detecting Fast Charger
- 12-Volt DC power for charging on-the-go
- Brilliant LED provides charging status

Part #2976
Traxxas AC-to-DC
Power Supply Adapter



BATTERY APPLICATION GUIDE

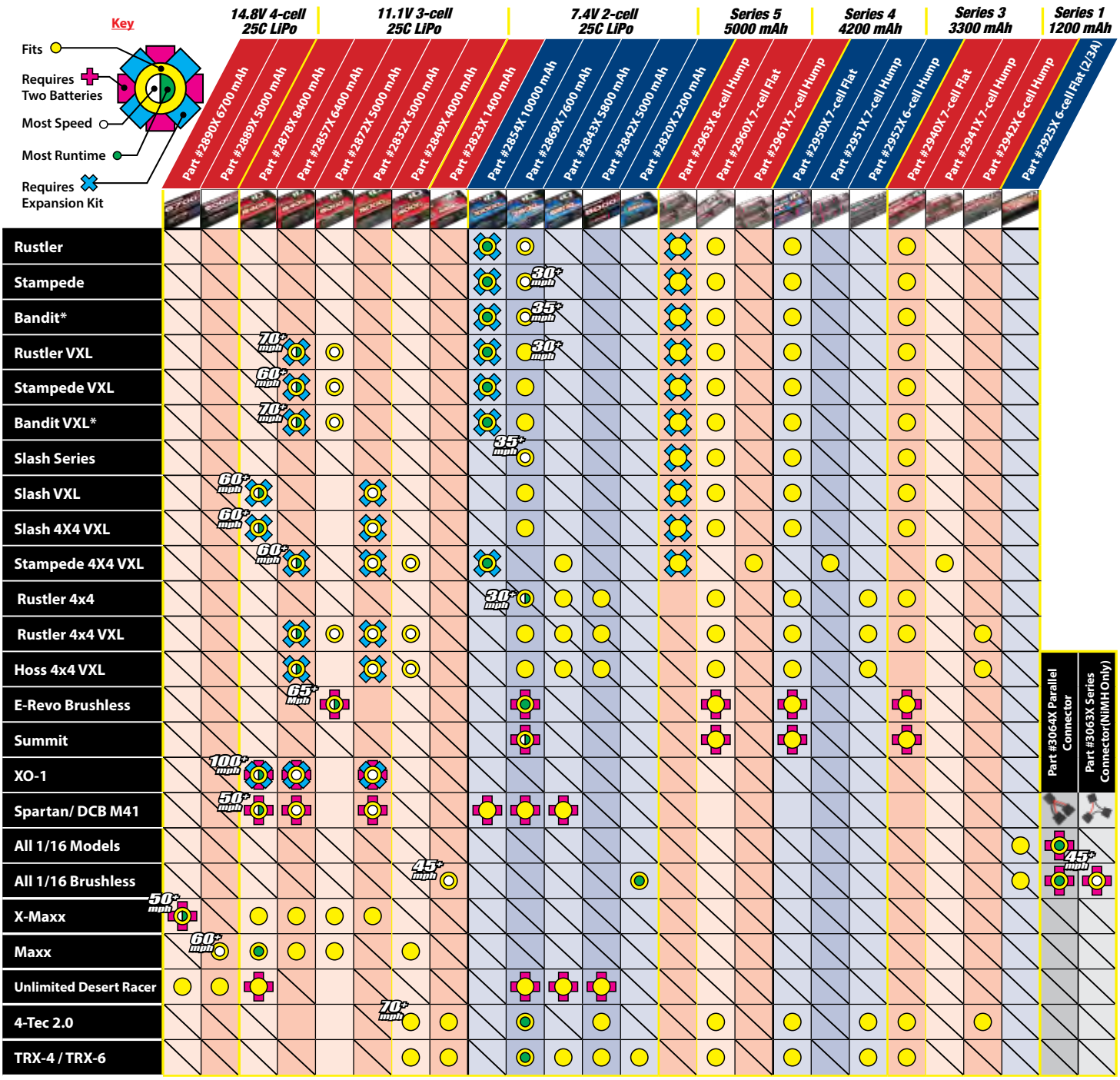

*Stock Bandit body will not fit with battery expansion kit installed.

TRAXXAS POWER CELL

BATTERIES & CHARGERS PARTS LIST

PARTS SHOWN IN BOLD ARE OPTIONAL ACCESSORIES.

Part categories and individual part listings are arranged alphabetically.

Batteries: LiPo

2823X	1400mAh 11.1v 3-Cell 25C LiPo Battery
2820X	2200mAh 7.4v 2-Cell 25C LiPo Battery
2849X	4000mAh 11.1v 3-Cell 25C LiPo Battery
2832X	5000mAh 11.1v 3-Cell 25C LiPo Battery
2872X	5000mAh 11.1v 3-Cell 25C LiPo Battery
2889X	5000mAh 14.8v 4-Cell 25C LiPo Battery
2842X	5000mAh 7.4v 2-Cell 25C LiPo Battery
2843X	5800mAh 7.4v 2-Cell 25C LiPo Battery
2857X	6400mAh 11.1v 3-Cell 25C LiPo Battery
2890X	6700mAh 14.8v 4-Cell 25C LiPo Battery
2869X	7600mAh 7.4v 2-Cell 25C LiPo Battery

Batteries: NiMH

2922X	Battery, Power Cell, 3000mAh (NiMH, 6-C flat, 7.2V)
2923X	Battery, Power Cell, 3000mAh (NiMH, 7-C flat, 8.4V)
2926X	Battery, Power Cell, 3000mAh (NiMH, 7-C hump, 8.4V)
3036	Battery, RX Power Pack (5-cell flat style, NiMH, 1200mAh)
3037	Battery, RX Power Pack (5-cell hump style, NiMH, 1200mAh)
2919	Battery, Series 1 Power Cell 1800mAh (NiMH, 6-C flat, 7.2V, Sub-C)
2925X	Battery, Series 1 Power Cell, 1200mAh (NiMH, 6-C flat, 7.2V, 2/3A)
2942X	Battery, Series 3 Power Cell, 3300mAh (NiMH, 6-C flat, 7.2V)
2940X	Battery, Series 3 Power Cell, 3300mAh (NiMH, 7-C flat, 8.4V)
2941X	Battery, Series 3 Power Cell, 3300mAh (NiMH, 7-C hump, 8.4V)
2952X	Battery, Series 4 Power Cell, 4200mAh (NiMH, 6-C flat, 7.2V)
2950X	Battery, Series 4 Power Cell, 4200mAh (NiMH, 7-C flat, 8.4V)
2951X	Battery, Series 4 Power Cell, 4200mAh (NiMH, 7-C hump, 8.4V)
2960X	Battery, Series 5 Power Cell, 5000mAh (NiMH, 7-C flat, 8.4V)
2961X	Battery, Series 5 Power Cell, 5000mAh (NiMH, 7-C hump, 8.4V)
2963X	Battery, Series 5 Power Cell, 5000mAh (NiMH, 8-C hump, 9.6V)

Batteries: Parts & Accessories

3725X	Battery expansion kit (allows for installation of taller multi-cell battery packs)
3627X	Battery hold-down (grey) (1) / receiver hold-down (grey) (1) / metal posts (2)/ spacers (2)/ body clips (2)/ servo tape/ adhesive foam pad
1523	Battery holder with on/off switch/ rubber on/off switch cover
3039	Battery holder, 4-cell (no on/off switch) (for Jato and others that use a male Futaba style connector)
3170X	Battery holder, 4-cell/ on-off switch
3590	Battery holder, 6-cell (assembly includes: on/off switch/RTS contacts/ wires to RTS motor and to receiver “battery in”)
2914	Battery, Power Cell AA Alkaline (4)

Chargers & Accessories

2976A	AC to DC converter, 40W (for Australia)
2976G	AC to DC converter, 40W (for Europe)
2976T	AC to DC converter, 40W (for United Kingdom)
3028	Adapter, Molex to Traxxas® receiver battery pack (for charging) (1)
2938X	Adapter, Traxxas® iD® LiPo battery (adapts Traxxas iD batteries to separate balance ports)
2972	Charger, EZ-Peak® Dual, 100W, NiMH/LiPo with iD® Auto Battery Identification
2973	Charger, EZ-Peak® Live Dual, 200W, NiMH/LiPo with iD® Auto Battery Identification
2971	Charger, EZ-Peak® Live, 100W, NiMH/LiPo with iD® Auto Battery Identification
2970	Charger, EZ-Peak® Plus, 4 amp, NiMH/LiPo with iD® Auto Battery Identification
2978	Fuse, charger, 5A (2) (for #2974, 2975, 2977)
3029	Plug Adapter (For TRX® Power Charger to charge 7.2V Packs)
3032	Power adapter, DC (12V car adapter for TRX® Power Charger)
2928	Temperature sensor, EZ-Peak Plus
3035	Wiring harness for RX Power Pack, Revo® (includes on/off switch and charge jack)
3034	Wiring harness for RX Power Pack, Traxxas® nitro vehicles (includes on/off switch and charge jack)
3038	Wiring harness, on-board radio system (includes on/off switch and charge jack) (Jato)

Completer Packs

2983	Battery/charger completer pack (includes #2969 2-amp NiMH peak detecting AC charger (1), #2923X 3000mAh 8.4V 7-cell NiMH battery (1))
2984	Battery/charger completer pack (includes #2969 2-amp NiMH peak detecting AC charger (1), #2926X 3000mAh 8.4V 7-cell NiMH battery (1))
2992	Battery/charger completer pack (includes #2970 iD® charger (1), #2843X 5800mAh 7.4V 2-cell 25C LiPo battery (1))
2994	Battery/charger completer pack (includes #2970 iD® charger (1), #2849X 4000mAh 11.1v 3-Cell 25C LiPo Battery (1))
2996X	Battery/charger completer pack (includes #2971 iD charger (1), #2889X 5000mAh 14.8V 4-cell 25C LiPo battery (1))
2993	Battery/charger completer pack (includes #2971 iD® charger (1), #2890X 6700mAh 14.8V 4-cell 25C LiPo battery (2))
2991	Battery/charger completer pack (includes #2972 Dual iD® charger (1), #2869X 7600mAh 7.4V 2-cell 25C LiPo battery (2))
2990	Battery/charger completer pack (includes #2972 Dual iD® charger (1), #2872X 5000mAh 11.1V 3-cell 25C LiPo battery (2))
2997	Battery/charger completer pack (includes #2973 Dual iD charger (1), #2890X 6700mAh 14.8V 4-cell 25C LiPo battery (2))

If you have questions or need technical assistance, call Traxxas at:

1-888-TRAXXAS

(1-888-872-9927) (U.S. residents only)

For orders, calls outside the U.S., and other information, call 972-549-3000, or fax to 972-549-3011 e-mail Traxxas at support@Traxxas.com

TRAXXAS.com



FOR TECHNICAL ASSISTANCE CALL TOLL-FREE
1888-TRAXXAS (1-888-872-9927)
EMAIL: SUPPORT@TRAXXAS.COM

TRAXXAS, 6250 TRAXXAS WAY, MCKINNEY, TX 75070